UCRL-11303

University of California

Ernest O. Lawrence Radiation Laboratory

TWO-WEEK LOAN COPY

This is a Library Circulating Copy which may be borrowed for two weeks. For a personal retention copy, call Tech. Info. Division, Ext. 5545

A VERSATILE SCALER AND READ-OUT SYSTEM

Berkeley, California

DISCLAIMER

This document was prepared as an account of work sponsored by the United States Government. While this document is believed to contain correct information, neither the United States Government nor any agency thereof, nor the Regents of the University of California, nor any of their employees, makes any warranty, express or implied, or assumes any legal responsibility for the accuracy, completeness, or usefulness of any information, apparatus, product, or process disclosed, or represents that its use would not infringe privately owned rights. Reference herein to any specific commercial product, process, or service by its trade name, trademark, manufacturer, or otherwise, does not necessarily constitute or imply its endorsement, recommendation, or favoring by the United States Government or any agency thereof, or the Regents of the University of California. The views and opinions of authors expressed herein do not necessarily state or reflect those of the United States Government or any agency thereof or the Regents of the University of California.

Submitted to Nuclear Instruments and
Methods for publication.

UCRL11303

UNIVERSITY OF CALIFORNIA

Lawrence Radiation Laboratory
Berkeley, California

AEC Contract No. W-7405-eng-48

A VERSATILE SCALER AND READ-OUT SYSTEM

Horace G. Jackson, Lloyd B. Robinson, and Donald L. Wieber

February 18, 1964

A VERSATILE SCALER AND READ-OUT SYSTEM*

Horace G. Jackson, Lloyd B. Robinson, and Donald L. Wieber

Lawrence Radiation Laboratory
University of California
Berkeley, California

February 18, 1964

ABSTRACT

A scaling system is described whose automatic readout can record from an unlimited number of scalers or other digital equipment. The read-out system normally controls a paper-tape punch at 60 characters per second or a typewriter at 15 characters per second, but magnetic-tape output has also been used.

The scaler has a dead time per count of less than 100 nsec. Nixie-tube display is provided and a wide range of operating modes are possible. Planar silicon transistors and diodes are used exclusively in both the scaler and the read-out.

I. INTRODUCTION

A scaler system with facilities for visual, typewritten, and computer-oriented readout has been developed and is now in production. The system can operate with any number of scalers, and is particularly useful for experiments where automatic counting and recording of large amounts of data is required. The scalers in a single chassis may be used separately with manual control.

Each scaler chassis contains two six-decade scalers capable of counting at rates up to 10 Mc/sec. Visual readout is provided by six "Nixie" tubes, so that the contents of either scaler may be visually displayed. Decades and control circuits are built on separate plug-in cards. Each scaler has its own discriminator with front-panel sensitivity control. The block diagram of a typical scaler and readout system is shown in Fig. 1; a photograph of a small scaling assembly is shown in Fig. 2. Only two "stations" are shown, each containing two scalers, but any number of additional stations can be used without any modifications.

A remote Control Console accepts binary coded decimal (BCD) information from the stations in serial form (i.e., one decimal digit at a time), then processes the data and records it on a typewriter and/or paper-tape punch. The Control Console provides for remote gating, reset, and selection of display mode. It can operate an unlimited number of scalers, since all control signals are regenerated in each scaler chassis and the control cables are connected in series between scalers. The BCD information from the decades is fed to the Control Console on four wires. An additional four wires are used to transmit parity check, end of line, and alphabet codes. The parallel-to-serial conversion or "scanning" circuitry is contained in each scaler chassis and is interlocked so that only one scaler at a time is scanned during read-out.

The read-out logic allows the addition of more stations to a system without any modification to the original equipment. Thus a scaler can be added to an operating system by merely connecting a cable from the extra scaler to the scalers already in operation. Other devices can of course be read out, and a magnetic core store and a panel of decimal switches have been designed and read out as part of one of these systems. A buffer station has also been built to allow RIDL or Victoreen pulse-height analyzers to be read out as one of the stations of a system. In another application, a magnetic-tape unit has been used to replace the Control Console and paper-tape punch.

Approximately 25 of the scalers have been used for about six months. They have required very little maintenance after initial check-out. No difficulties have been experienced with spurious signals even when operating in the vicinity of spark chambers.

Planar silicon transistors and diodes have been used throughout the system and of the four failures reported during use, none were due to component failures, two were caused by poor solder connections, and two were due to mechanical difficulties with the electric typewriters.

II. DUAL SCALER

A block diagram of the Dual Scaler is shown in Fig. 3.

The 12 decade cards have a common reset line. Both manual and automatic reset facilities are available. In the automatic mode a switch allows the counts stored in the scaler to be either erased or retained after a Count-Print cycle. Another switch allows the carry output from any decade to be applied to the "decade out" connector.

A. Discriminator

The discriminator specifications are as follows.

Threshold:

Range: +0.1 to +11 V or -0.2 to -22 V, variable by means of a 10-turn potentiometer and a ×10 attenuator.

Linearity: ±1%, integral.

Stability: < 0.5% shift per °C.

Input Pulse Width: 5 nsec to 200 μsec.

Counting Rate: 0 to 10^7 pulses per sec (pps).

Input Impedance: 125Ω.

Outputs: 5.0 V, 25 nsec into scaler

2.5 V, 25 nsec into 125-Ω load.

A block diagram of the discriminator is shown in Fig. 4. The tunnel diode is biased and loaded so that it remains in the high-voltage state as long as the input signal exceeds the threshold, up to 200 μsec, so as to avoid double pulsing.

The blocking-oscillator output stage delivers an output pulse with shape and size constant to within a few percent over the range specified above.

B. Scaler Card

The circuits used in the scaler card are somewhat unusual and will be described in detail. The schematic diagram is shown in Fig. 5. It is a multipurpose scaling unit, capable of scaling pulses by a factor of 16, 10, 8, or 5 at input rates up to 10^7 pps. Feedback from FF-4 to the gate allows the natural scale of 16 to be converted to a scale of 10 with a 1-2-4-8 output code [1,2]. The gate is normally open and counting proceeds naturally until the input count of 8 when all flip-flops are in the "0" state, except FF-4 which is set to "1." Due to the feedback the gate is now closed. On the ninth

count, FF-1 sets to "1", and on the tenth count resets to "0", causing a carry pulse to reset FF-4 through the emitter-follower Q-9. The gate now opens to allow for another cycle of 10 counts.

All flip-flops are reset to "0" by a common reset line. Facilities are provided for individually setting a "1" in each flip-flop.

As all the flip-flops are very similar, description here will be restricted to FF-1. Transistors Q-3 and Q-4 will be recognized as a flip-flop with emitter degeneration. Triggering is at the collectors via Q-1 and Q-2, whose emitter-base junctions act as steering diodes into the flip-flop. In addition, Q-1 and Q-2 act somewhat as common-base transistors, and voltage gain is obtained at their collectors. This arrangement will be explained further.

Output logic levels in the scaler system were chosen as +4 V, a "1", and -1 V, a "0." Since total current can become a problem in large counting systems where many scaler cards may be required, transistors are operated at as low a current level as possible, consistent with a 10-Mc/sec switching frequency. The 2N706 was chosen as a widely used inexpensive reliable silicon transistor. For this type of transistor: f_t = 250 Mc/sec, and C_{cb} = 6 pF (+2 pF stray = 8 pF), when I_c = 5 mA and V_{cb} = 6 V. The charge into the base required to increase the collector current by 5 mA is given by

$$q = \frac{I_e}{2\pi f_t} = \frac{5\times 10^{-3}}{2\pi\times 250\times 10^{6}} = 3.2\times 10^{-12} \text{ coulombs (reference}^{3}\text{)),}$$

but the charge required to change the collector voltage by 5 V is given by

$$q = CV = 8\times 10^{-12}\times 5 = 40\times 10^{-12} \text{ coulombs.}$$

Over twelve times as much charge is used to change the collector voltage as is required to switch the transistor. Optimum design therefore calls for a

much smaller change of voltage at the collectors of the switching transistors. The arrangement shown in Fig. 5 was suggested by F. S. Goulding of our Laboratory. The voltage change at the collector of Q-3 and Q-4 is about 1.5 V; at the collector of Q-1 and Q-2 the change is from +4 V to -1 V.

The gate takes the form of a current switch: Q-6, Q-7, and Q-8. As a decade scaler the base of Q-7 is directly coupled to the "set out" of FF-4, which—when the flip-flop is in the "0" state—is normally at -1 V, but due to variations in transistor characteristics it can vary by about ±0.5 V. The base of Q-6 is returned to -2 V, therefore Q-6 is nonconducting. The differentiated carry-pulse from FF-1 is about +2 V in amplitude, triggering the switch and presenting a uniform positive pulse to the input of FF-2. When FF-4 is set to "1" and the base of Q-7 rises to +4 V, carry-pulses at the base of Q-6 are now unable to trigger the switch and the gate is closed. Transistor Q-8 is a constant current supply for Q-7.

C. Display and Scan Circuits

The "scan gates" are logical "AND" circuits and allow the 4-line BCD code from each decade to be presented, in turn, to the "Nixie decoder," and also to the Control Console. Twelve such gate circuits are used, one for each decade.

The Nixie decoder converts the 4-line BCD input to a 10-line decimal output. Connection is then made in parallel to the appropriate Nixie-tube cathodes. Selection of the appropriate Nixie tube is made by gating the anode through the "Nixie gate" card; while the BCD code from the corresponding decade is selected through the scan gates. By the use of diodes in the 10-line Nixie decoder output, both odd and even parity check bits are generated.

D. Program Card

The routing of the gate pulses is done through a "program card." The program card is essentially a 30 by 30 matrix with diodes being used to route any of the 30 output positions of a "sequence generator" to any of the 30 program output lines.

Only 12 output positions are needed for decade read-out, with two additional positions to identify the two scalers. This allows fixed information such as: day, run numbers, computer instruction, etc. to be loaded by means of diodes into the program card in BCD code and appear on the printout along with the scaler stored count.

E. Sequence Generator and Station Control

The source of the gate pulses is the sequence generator card, which is a ring counter with 32 positions and is similar to that described by Leng[4]).

Except during remote read-out, the sequence generator is driven by a 2-kc/sec clock to allow continuous visual display. The clock signals are generated by the "station control" card which also contains the logical control circuits used in the automatic printout of the scaler, as described below under Control Logic. The numbers stored in a decade are decoded and displayed under the influence of the internal 2 kc/sec clock; but during remote readout, the scanning and decoding circuits operate under the influence of the Control Console.

III. CONTROL CONSOLE

The Control Console can be used for control and read-out of any number of remote "stations." A station usually contains a dual scaler, but may contain other devices, e.g., a pulse-height analyzer or a panel of switches, giving details of the experimental conditions.

As a part of the Decimal Scaler and Read-Out System, the Control Console:

(a) controls the scaler's visual display,

(b) controls the scaler data-accumulation gates, and provides for preset count or preset time, and

(c) operates through the station control card of each station to generate control logic and handle data for automatic scaler read-out onto a Tally paper-tape punch and/or an IBM Series 73 Selectric typewriter.

A. Control Logic

A simplified Control Console block diagram is shown in Fig. 6. The chronological sequence of events in the normal automatic read-out operation of several Decimal Scalers, with both a paper-tape punch and a typewriter recording, is given below.

1. A read-out operation can be initiated by a pushbutton or from a preset-time or preset-count electrical pulse.

2. Immediately after the arrival of a "start read-out" signal, the scaler data gates are disabled and the tape-motor gate is enabled. (The tape-motor gate uses a silicon controlled rectifier switch to control ac line power to the tape-punch motor.)

3. After a 0.2-sec delay to allow for the tape-motor starting transient, a start cycle is initiated that causes a typewriter carriage-return and encodes a "start code" on the paper tape.

4. Upon completion of the start cycle a "print command" is generated that acts through the station control card in the stations to disable all scaler scanning circuits. Then 20 μsec later a "transfer" signal from the Control Console enables the scanning circuits of the first station but leaves the internal 2 kc/sec scanning oscillator disabled.

5. The information or "character" from the first scanned position of the first scaler is recorded, and an "advance" signal then steps the scanner to its next position. This advance signal is generated at the Control Console by means of a feedback signal from the typewriter or, alternatively, if the tape-punch is recording with no typewriter, an electronic feedback loop with a 17-msec period.

6. When the last character in a scaler station has been inspected, the scanning circuitry in that station is again disabled and a transfer signal is passed to enable the next station's scanning circuits.

7. The transfer signal from the last scaler will normally stop the read-out operation.

8. Several options are available for the "stop read-out" cycle. In each case, completion of this cycle leaves the scaler data gates and visual scanning enabled and the tape motor turned off.

a. A tape leader can be generated automatically, the length determined by a "tape leader" switch.

b. Scaler data gates can be enabled automatically at the end of the read-out operation or left disabled until enabled manually by depression of a momentary-on toggle switch. The mode is selected by a front-panel switch.

c. A safety feature is included which will end the read-out operation if all information lines show logic "0"'s for more than 10 consecutive read-out cycles.

B. Data Handling

Referring to the block diagram, Fig. 6, the eight input information lines are fed through a "buffer store," inspected by the "parity control," and then routed to the tape-punch and typewriter decoding and driving blocks.

The buffer store consists of eight gated flip-flops, which accept the

8-line input information during a 1-μsec interval at the start of each cycle. This prevents errors in format even if the code from a station should change during a recording cycle. The buffer store also regenerates the logic levels, rejects noise, and serves as a convenient common information-line gate. A parity-generating circuit inspects seven of the buffer store outputs and produces a parity bit to be punched on the paper tape. This parity bit is also compared with an externally generated parity bit from the station. A discrepancy will result in the recording of an "error" code and the lighting of a "parity alarm" light, if the error-code switch is in the appropriate position.

The IBM Selectric "golf-ball" typewriter was chosen as a read-out device because a complete alpha-numeric code totalling 41 characters and 5 functional operations can be typed by using only 11 solenoids, and because the maximum repetition rate is 15 cps as opposed to 10 cps for a conventional typewriter. Six solenoids drive a six-bit mechanical binary-to-decimal decoder which is an integral part of the Selectric character-selection mechanism. Additional solenoid are used for space, tab, carriage-return, and other functional operations.

Continuous application of drive voltage to the tape-punch or typewriter solenoids could case overheating. Therefore, the solenoid-driver circuits are strobed in a redundant fashion so that no one component failure can result in continuous drive current to the solenoids.

The code generated for the paper-tape punch is IBM 7090 BCD, for compatibility with Laboratory computing equipment. The IBM Selectric typewriter uses a modified BCD code which can be obtained from the ordinary 1-2-4-8 code as follows (This decoding procedure was suggested to the authors by T. Taussig of this Laboratory):

IBM 7090 BCD bit	Operation	Selectric BCD 904 solenoid
X (B)	Inverted always	T2
0 (A)	Inverted always	T1
8	Inverted always	R2A
2	Inverted always	R1
4	Inverted only when 8-bit is "0"	R2
1	Inverted only when 8-bit is "1"	R5

ACKNOWLEDGMENT

It is a pleasure to acknowledge many valuable suggestions by F. S. Goulding, F. A. Kirsten, and D. A. Mack during this project. Commercial fabrication of the scalers was supervised by E. W. Pullen. The development work has been ably assisted by I. Ko and T. Shimizu.

FOOTNOTE AND REFERENCES

*Work done under the auspices of the U. S. Atomic Energy Commission.

[1]) W. C. Elmore, Rev. Sci. Instr. 22 (1951) 835.

[2]) E. Bukstein, Instr. Control Systems 33 (1960) 1314.

[3]) J. J. Sparks and R. Beaufoy, Proc. I.R.E. 45 (1957) 1740.

[4]) J. Leng and J. C. Irvine, Canadian Electronics Engineering, Jan. 1963.

FIGURE CAPTIONS

Fig. 1. Logic of the Scaling and Readout System. During read-out an identifying code and the stored data is read from each station in turn. Since the control signals are regenerated at each station, any number of stations can be included in an experimental setup. Any station can be skipped during read-out by means of a front-panel switch.

Fig. 2. A small scaling and readout assembly. The system shows two scaler "stations" and a Control Console. Each of the scaler stations contains two six-decade scalers.

Fig. 3. Logic diagram of a scaler "station." Each station can hold two six-decade scalers, together with the scanning circuitry necessary for display and remote read-out.

Fig. 4. Simplified circuitry for the discriminator. Input signals at rates up to 10^7 pps can be accepted. FDG 1147 is similar to 1N 904.

Fig. 5. Scaling-card circuitry. The circuitry as shown will scale by 10 or a minor change will convert it to a scale of 16. Each of the four flip-flops are identical to FF-1.

Fig. 6. Control Console logic. Data is accepted from the scalers and recorded, using either a paper-tape punch, a typewriter, or both. Scaler gating signals are also generated and provision is made for automatic recycling after a preset time or preset count.

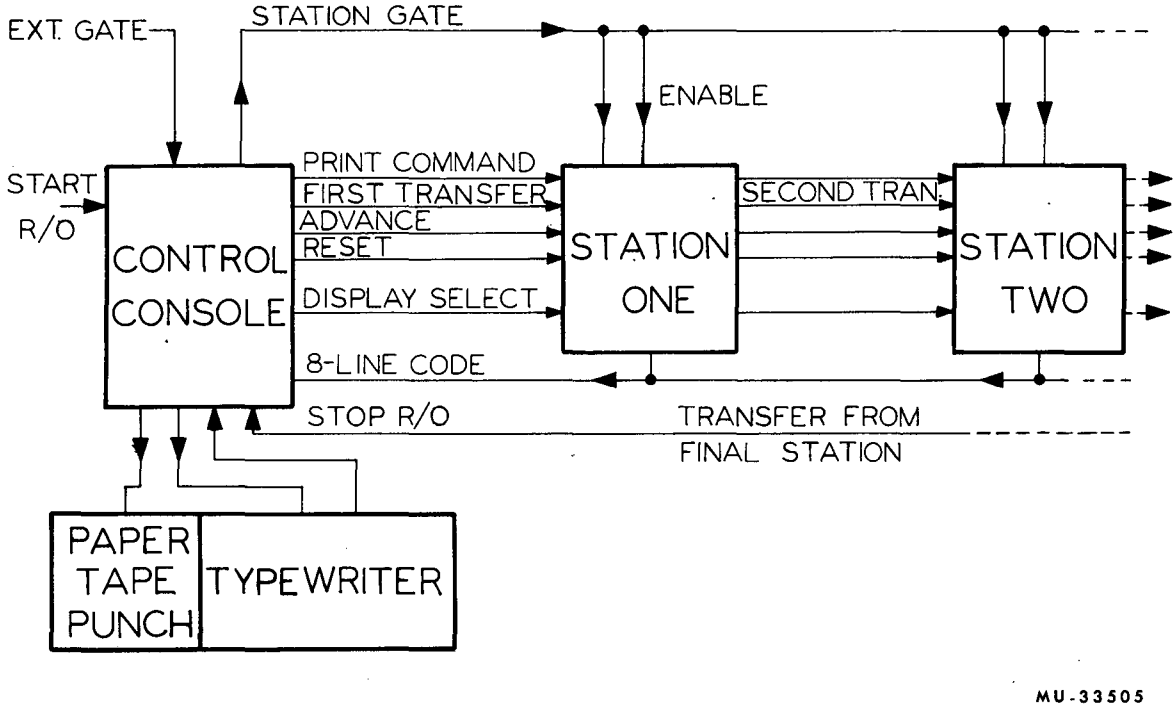
EXT. GATE
STATION GATE
ENABLE
START
R/O
CONTROL
CONSOLE
PRINT COMMAND
FIRST TRANSFER
ADVANCE
RESET
DISPLAY SELECT
8-LINE CODE
STOP R/O
STATION
ONE
SECOND TRAN.
STATION
TWO
TRANSFER FROM
FINAL STATION
PAPER
TAPE
PUNCH
TYPEWRITER
MU-33505

Fig. 1

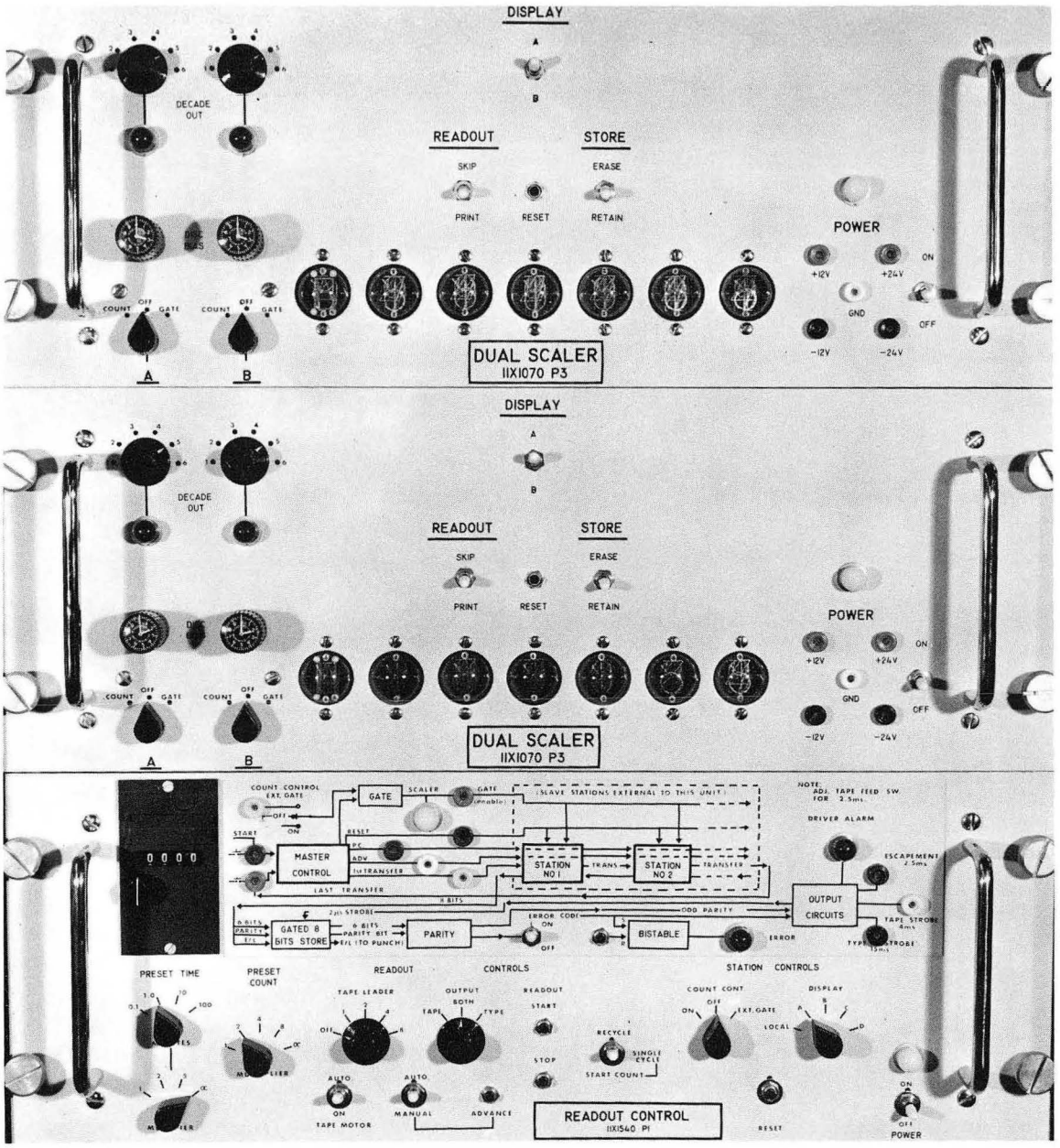
DISPLAY
A
B
DECADE OUT
READOUT
SKIP
PRINT
STORE
ERASE
RESET
RETAIN
POWER
+12V
+24V
ON
GND
OFF
-12V
-24V
COUNT
OFF
GATE
A
B
DUAL SCALER
IIX1070 P3
DISPLAY
A
B
DECADE OUT
READOUT
SKIP
PRINT
STORE
ERASE
RESET
RETAIN
POWER
+12V
+24V
ON
GND
OFF
-12V
-24V
COUNT
OFF
GATE
A
B
DUAL SCALER
IIX1070 P3
0000
COUNT CONTROL EXT. GATE
OFF
ON
START
GATE
SCALER
GATE (enable)
(SLAVE STATIONS EXTERNAL TO THIS UNIT)
NOTE ADJ. TAPE FEED SW. FOR 2.5ms
DRIVER ALARM
MASTER CONTROL
RESET
PC
ADV
1st TRANSFER
LAST TRANSFER
STATION NO 1
TRANS
STATION NO 2
TRANSFER
ESCAPEMENT 2.5ms
8 BITS
2μs STROBE
ODD PARITY
OUTPUT CIRCUITS
TAPE STROBE 4ms
TYPE STROBE 15ms
8 BITS
PARITY
E/L
GATED 8 BITS STORE
6 BITS
PARITY BIT
E/L (TO PUNCH)
PARITY
ERROR CODE
ON
OFF
BISTABLE
ERROR
PRESET TIME
PRESET COUNT
READOUT CONTROLS
STATION CONTROLS
TAPE LEADER
OUTPUT
BOTH
TAPE
TYPE
READOUT
START
STOP
RECYCLE
SINGLE CYCLE
START COUNT
COUNT CONT.
OFF
ON
EXT. GATE
LOCAL
DISPLAY
AUTO
ON
TAPE MOTOR
AUTO
MANUAL
ADVANCE
READOUT CONTROL
IIX1540 P1
RESET
ON
OFF
POWER

ZN-4159

Fig. 2

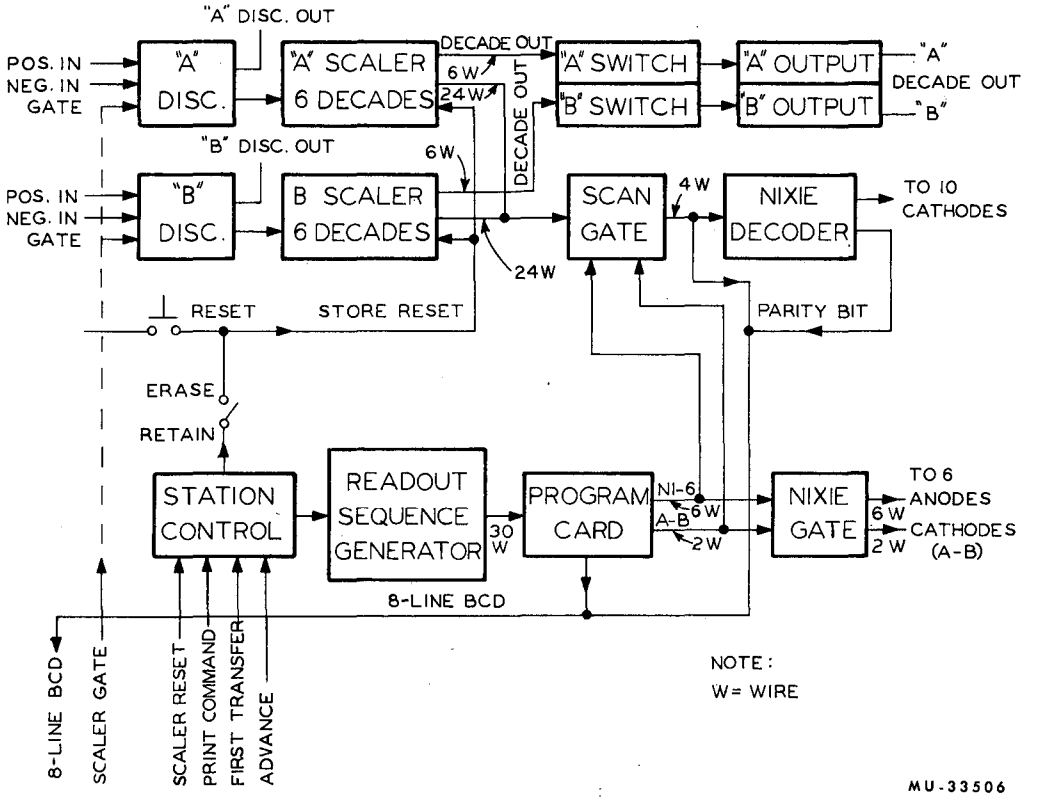
"A" DISC. OUT
POS. IN
NEG. IN
GATE
"A" DISC.
"A" SCALER 6 DECADES
DECADE OUT
6 W
24 W
DECADE OUT
"A" SWITCH
"B" SWITCH
"A" OUTPUT
"B" OUTPUT
"A"
DECADE OUT
"B"
"B" DISC. OUT
6W
POS. IN
NEG. IN
GATE
"B" DISC.
B SCALER 6 DECADES
SCAN GATE
4 W
NIXIE DECODER
TO 10 CATHODES
24W
RESET
STORE RESET
PARITY BIT
ERASE
RETAIN
STATION CONTROL
READOUT SEQUENCE GENERATOR
30 W
PROGRAM CARD
NI-6
A-B
6 W
2 W
NIXIE GATE
TO 6 ANODES
6 W
CATHODES (A-B)
2 W
8-LINE BCD
8-LINE BCD
SCALER GATE
SCALER RESET
PRINT COMMAND
FIRST TRANSFER
ADVANCE
NOTE:
W= WIRE
MU-33506

Fig. 3

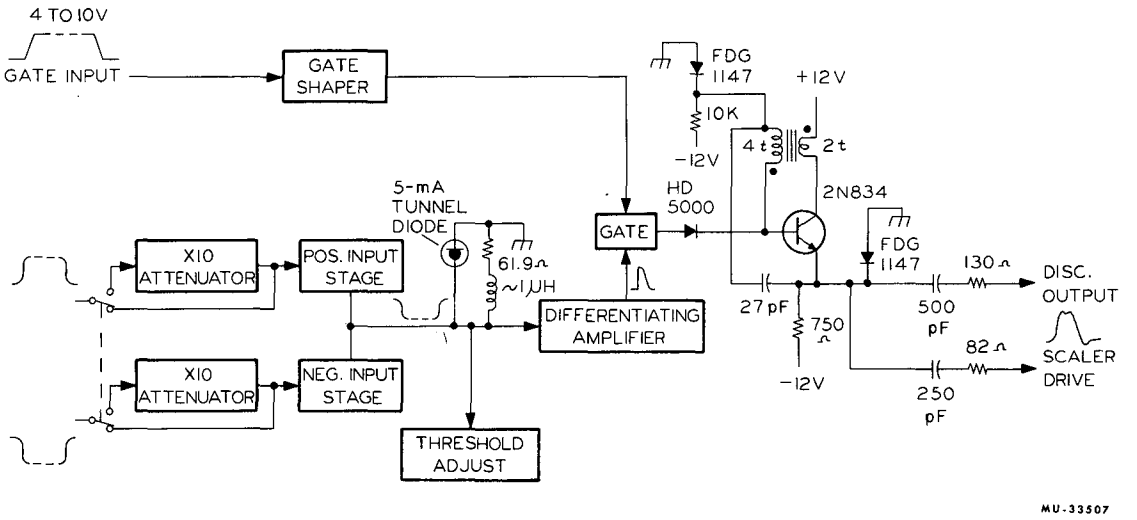
4 TO 10V
GATE INPUT
GATE SHAPER
FDG 1147
+12V
10K
-12V
4t
2t
2N834
HD 5000
5-mA TUNNEL DIODE
GATE
FDG 1147
X10 ATTENUATOR
POS. INPUT STAGE
61.9Ω
~1μH
DIFFERENTIATING AMPLIFIER
27 pF
750 Ω
130 Ω
DISC. OUTPUT
500 pF
82 Ω
SCALER DRIVE
-12V
250 pF
X10 ATTENUATOR
NEG. INPUT STAGE
THRESHOLD ADJUST
MU-33507

Fig. 4

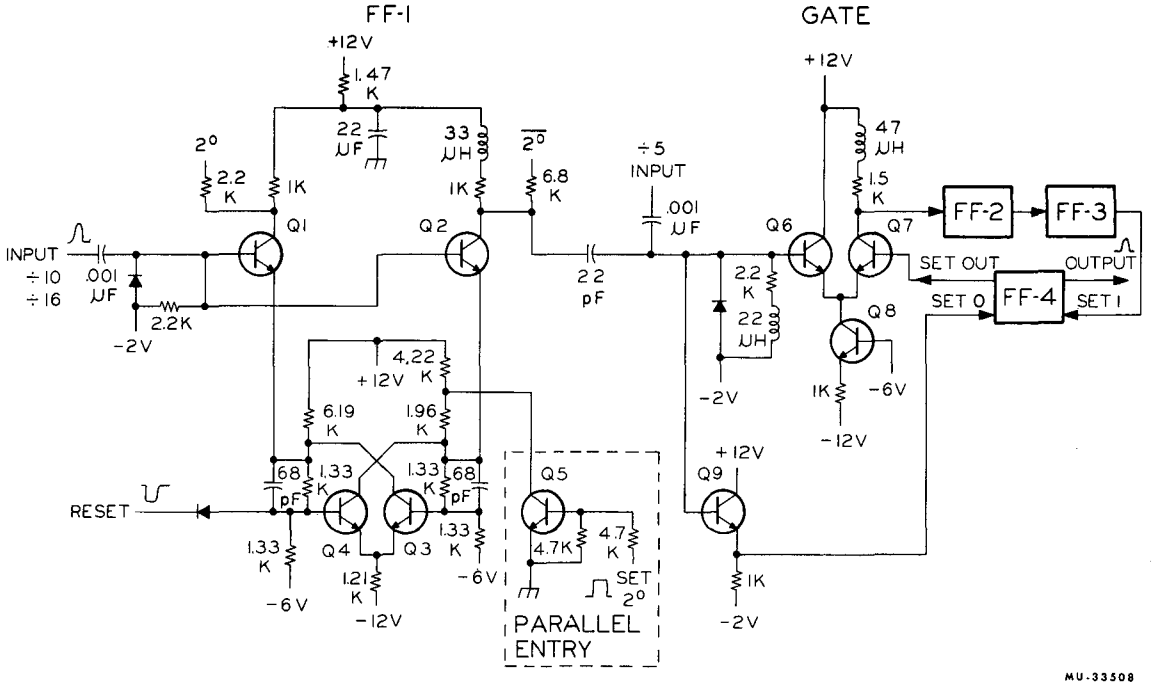
FF-1
GATE
+12V
1.47 K
22 µF
33 µH
2°
2.2 K
1K
Q1
Q2
6.8 K
÷5 INPUT
.001 µF
22 pF
INPUT
÷10
÷16
.001 µF
2.2K
-2V
4.22 K
+12V
6.19 K
1.96 K
68 pF
1.33 K
RESET
Q4
Q3
1.21 K
-6V
-12V
Q5
4.7K
4.7 K
SET 2°
PARALLEL ENTRY
Q6
Q7
Q8
Q9
47 µH
1.5 K
2.2 K
22 µH
1K
FF-2
FF-3
FF-4
SET OUT
SET 0
SET 1
OUTPUT
MU-33508

Fig. 5

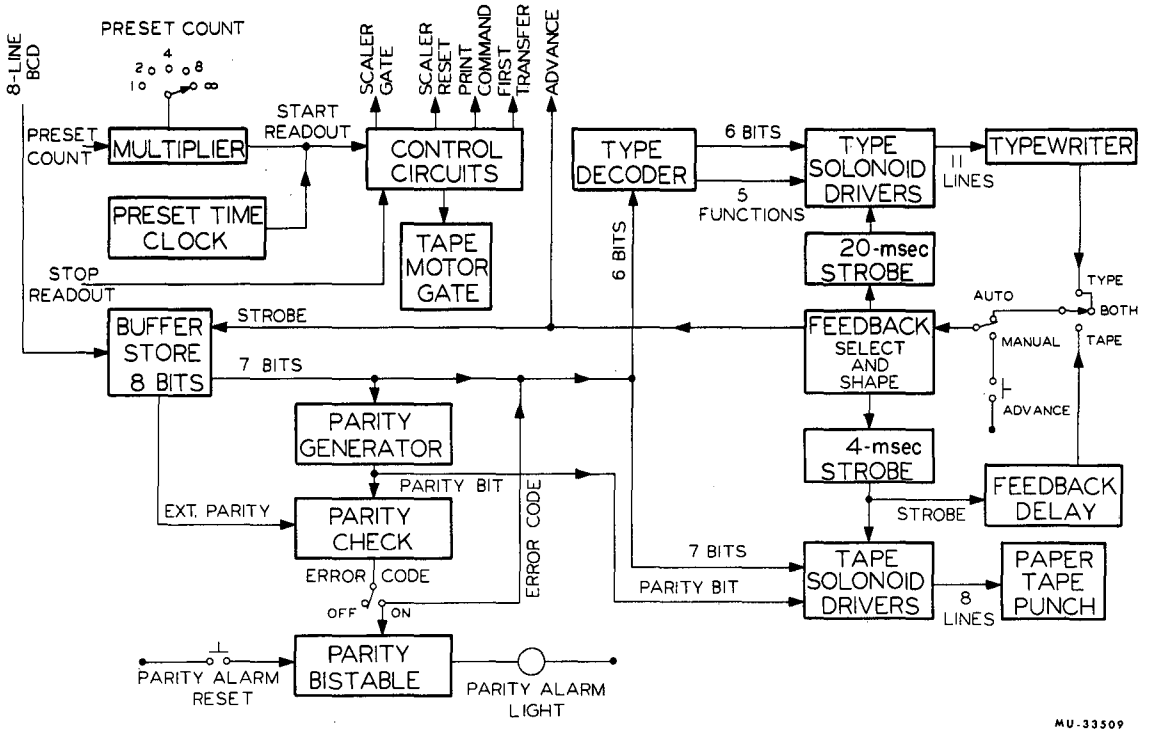
8-LINE BCD
PRESET COUNT
4
2
8
1
8
PRESET COUNT
MULTIPLIER
START READOUT
SCALER GATE
SCALER RESET
PRINT COMMAND
FIRST TRANSFER
ADVANCE
CONTROL CIRCUITS
PRESET TIME CLOCK
TAPE MOTOR GATE
STOP READOUT
BUFFER STORE 8 BITS
STROBE
7 BITS
PARITY GENERATOR
PARITY BIT
EXT. PARITY
PARITY CHECK
ERROR CODE
OFF
ON
ERROR CODE
PARITY ALARM RESET
PARITY BISTABLE
PARITY ALARM LIGHT
TYPE DECODER
6 BITS
5 FUNCTIONS
6 BITS
TYPE SOLONOID DRIVERS
11 LINES
TYPEWRITER
20-msec STROBE
FEEDBACK SELECT AND SHAPE
AUTO
MANUAL
ADVANCE
TYPE
BOTH
TAPE
4-msec STROBE
STROBE
FEEDBACK DELAY
7 BITS
PARITY BIT
TAPE SOLONOID DRIVERS
8 LINES
PAPER TAPE PUNCH
MU-33509

Fig. 6

This report was prepared as an account of Government sponsored work. Neither the United States, nor the Commission, nor any person acting on behalf of the Commission:

A. Makes any warranty or representation, expressed or implied, with respect to the accuracy, completeness, or usefulness of the information contained in this report, or that the use of any information, apparatus, method, or process disclosed in this report may not infringe privately owned rights; or

B. Assumes any liabilities with respect to the use of, or for damages resulting from the use of any information, apparatus, method, or process disclosed in this report.

As used in the above, "person acting on behalf of the Commission" includes any employee or contractor of the Commission, or employee of such contractor, to the extent that such employee or contractor of the Commission, or employee of such contractor prepares, disseminates, or provides access to, any information pursuant to his employment or contract with the Commission, or his employment with such contractor.