UCRL 11425 Rev
cy 2

University of California

Ernest O. Lawrence Radiation Laboratory

TWO-WEEK LOAN COPY-

This is a Library Circulating Copy which may be borrowed for two weeks. For a personal retention copy, call Tech. Info. Division, Ext. 5545

Berkeley, California

11425 Rev

DISCLAIMER

This document was prepared as an account of work sponsored by the United States Government. While this document is believed to contain correct information, neither the United States Government nor any agency thereof, nor the Regents of the University of California, nor any of their employees, makes any warranty, express or implied, or assumes any legal responsibility for the accuracy, completeness, or usefulness of any information, apparatus, product, or process disclosed, or represents that its use would not infringe privately owned rights. Reference herein to any specific commercial product, process, or service by its trade name, trademark, manufacturer, or otherwise, does not necessarily constitute or imply its endorsement, recommendation, or favoring by the United States Government or any agency thereof, or the Regents of the University of California. The views and opinions of authors expressed herein do not necessarily state or reflect those of the United States Government or any agency thereof or the Regents of the University of California.

UCRL-11425 Rev.

UNIVERSITY OF CALIFORNIA
Lawrence Radiation Laboratory
Berkeley, California

AEC Contract No. W-7405-eng-48

OPERATION OF THE SMP DATA-ANALYSIS SYSTEM

William E. Humphrey and Ronald R. Ross

June 22, 1964

OPERATION OF THE SMP DATA-ANALYSIS SYSTEM*

William E. Humphrey and Ronald R. Ross

(Presented by Ronald R. Ross)

Department of Physics and Lawrence Radiation Laboratory
University of California, Berkeley, California

June 22, 1964

I. INTRODUCTION

Scanning and Measuring Projectors (SMP's) have been used to measure 72-inch hydrogen bubble-chamber film from the current Alvarez Group runs with 2.5- to 2.8-GeV/c K^- mesons (K-63 experiment) and 2- to 4-GeV/c π^- mesons (π-63 experiment). This is our first major measuring effort using SMP's and we report here on their performance.

Our system consists of five SMP's, like the one shown in Fig. 1, operating on-line to an IBM 7040 computer.[1] (The SMP has been described in detail elsewhere; here we review only a few of its main features.)[2] The typewriter (to the right of the viewing screen) is used for communication between the SMP operator and the SMP executive program stored in the 7040 computer. The operator is guided by this program through a sequence of operations leading to the complete measurement of an event. To the left of the viewing screen are the lenses used to project the stereoscopic photographic images of the 72-inch hydrogen bubble chamber via a system of mirrors onto the SMP viewing screen. The viewing screen is made up of white mylar sheets arranged so that a 6-mm measuring aperture can be moved to any part of the table. When the computer program requests a measurement, the operator moves the 6-mm aperture along the track

*Work sponsored by the U. S. Atomic Energy Commission.

or fiducial to be measured, while pressing a "record" button, and digitized coordinate data flow automatically into a buffer within the computer. Details of the digitizing procedure and accuracy of measurements are discussed in the next section. Results of using this system to process approximately 40 000 bubble chamber events are discussed in Sections III and IV in terms of event rejection ratios and measurement rates respectively.

II. DIGITIZING SYSTEM AND ACCURACY OF SMP MEASUREMENTS

The precision of the SMP is achieved by making measurements relative to an array of precisely placed bench marks. The bench marks consist of transparent holes, 20 mils in diameter, contact-printed on a glass photographic plate the size of the measuring table, and are located in a square array 1 cm on a side. Coordinates on tracks in the projected image are automatically measured by displacing the tracks by a known amount with a rotating periscope (Fig. 2) which can be moved to any point in the viewing screen. (The entrance to the periscope is the 6-mm aperture in the mylar screen.) The angular position of the periscope is known at all times by the contents of two scalers, ΔX and ΔY, which count signals from magnetic recordings on the rotating drum. The number of counts recorded on two magnetic strips on the drum are proportional to $R\cos\theta$ and $R\sin\theta$ for ΔX and ΔY respectively, where R is the radius of the periscope, and θ is its angular position.

As the track image sweeps over a bench mark, the ΔX and ΔY scalers are sampled, giving the displacement of the track point from the bench mark. The bench mark responsible for the measurement is located with the aid of a coarse digitization of the position of the rotating periscope.

The least count of resulting X and Y coordinates is 80 μ on the table, which corresponds to ~ 5 μ in the film plane. With the present SMP parameters of R = 2.4 cm and 1-cm bench-mark spacing, we digitize about 8 points/cm on a solid track.

By measuring the shadows of stretched wires, we find that individual digitizations have an rms spread of 0.006±.001 cm on the SMP table or about 4 μ in the film plane. Figure 3 is a plot of the points measured on a straight line. The least count is clearly visible as vertical lines of points along the track. The track was aligned approximately along the Y axis, changing 3 least counts in X in 40 cm. The horizontal scale is 200 times the vertical scale. On such a track measurement we average 10 SMP points to obtain one "smooth" point, which therefore has a precision of approximately 1.5 μ in the film plane. We conclude that the basic accuracy of individual SMP smooth points is adequate for bubble chamber measurements of very high precision.

There remains to be discussed the problems associated with measurements made off-axis and via mirrors. The gross defects in the optical system due to lens distortion and tilting of mirrors are easily compensated for by means of a simple linear first-order correction term of the form

$$X' = X\,[1 + a_1 X + a_2 Y + a_3(X^2 + Y^2)]$$
$$Y' = Y[1 + a_1 X + a_2 Y + a_3(X^2 + Y^2)].$$

The largest correction terms are of the order of 10^{-3}, and the neglect of second-order correction terms is justified. In our present SMP's we have found that there are residual effects not compensated for by the above transformation. These are primarily small cylindrical terms introduced by mirrors that are not flat enough and by defects in the lenses,

We are now replacing defective optical components with better quality components. In most areas of the tables, the effects are less than 5 μ, which corresponds to the size of the uncertainties in the bubble chamber optics for the 72-inch chamber. These effects average out over all the data, but some of our "large χ^2" events undoubtedly are caused by the optical system. Our experience with new optical elements indicates that this effect can be reduced to 1 μ but this requires a flatness of 1/2 fringe (5000 Å) in 6 in. for the ceiling mirror.

III. PERCENTAGE OF EVENTS REJECTED

Figure 4 shows the flow path for data from the measurement stage through the final-experiment analysis.[3] Events can be rejected at two levels: at the track processing level or at the event-analysis or hypothesis-testing level. Table I summarizes the failures at the various stages for the K-63 and π-63 experiments.

The first row gives the number of events measured on the SMP or Franckenstein. The second row gives the percentage of these events rejected at the track-analysis level. Improper indicative information and other operator errors are also included in this class of failure. We see that the SMP has had a slightly lower reject rate than the Franckenstein during this first period of operation. Much can be done to further decrease this rate on the SMP because in principle all tests made in PANAL and the track reconstruction part of PACKAGE can be incorporated into the SMP executive program. For ultimate efficiency of overall operation, we have put our major programming effort into improving filtering and vertex-measurement parts of the executive program and developing diagnostic programs. These efforts yield not only lower reject rates but also higher measuring rates. Now we are starting to incorporate

final tests of the data as soon after measurement as possible, in order to catch the rejects remaining at this level. Our goal is to surpass, for all types of events, the performance of the SMP measuring the π-63 4 prongs (see Table I).

The third row of Table I gives the percentage of event failures at the hypothesis-testing level. There are two main reasons that events fall into this category. First, the event may be of a type not tried in the hypotheses programmed for its topology. This is especially true for the K-63 events, since there is a 20% background of pions in the incident beam, and no incident-pion hypotheses are tried in the normal K-63 PACKAGE program. The number of events of this type depends on the topology of the event. Approximately 30% of the 4 prongs in this category fit pion hypotheses, and ~ 5% of the 2 prong + V fit pion hypotheses. A second main reason for failing to fit a hypothesis is undetected small-angle scatters and decays of final-state particles which give bad momentum and angle measurement of tracks. A careful examination of the tracks of such events usually reveals the scatter or decay, and remeasurement stopping at the point of scatter or decay causes the event to fit. To decrease this class of rejection in the SMP, we will incorporate a kink-detecting routine and appropriate feedback to the measurer. There always remains a small percentage of "unmeasurable" events which because of limitations in the current production analysis programs must be handled in a special way. In the future we will probably use a single SMP and a special "script" in the executive program to handle this problem.

In comparing the percentage of rejects for the SMP and Franckenstein in Table I, we should bear in mind the strong dependence on the type of event. For instance, in the third column the π-63 SMP figures are based

measurement of single-vertex 4-prong events, whereas column 2 refers to measurement of a variety of topologies (see Fig. 5). If we average over all topologies, there is no significant difference now between the Franckenstein and SMP for the hypothesis type of reject.

IV. MEASUREMENT RATE

We have seen that the accuracy and reject rates for SMP's are comparable with those for Franckensteins. Clearly, adding more tests of the SMP data to the executive program will reduce reject rates. In this section we examine the SMP measuring rates and compare them to those for Franckensteins. Again we find the SMP on a par with Franckensteins and showing room for improvement in the future.

In Fig. 5, a and b give the measurement rate calculated over two-week periods for all the measuring machines used in the Alvarez Group. The heavy dark line gives the average for all events measured during the two-week periods for SMP's (5a) and Franckensteins (5b). There is an overall trend toward greater measuring rates during the period covered, primarily due to the constant effort of Mr. Edward Hoedemaker and the data analysts he supervises to strive for greater reliability of the measurements and greater efficiency in operating the machines. Over and above this general trend, we see that the SMP measuring rate is essentially the same as Franckenstein's. These figures were obtained during a period when (a) the SMP was working with a minimal executive program which was undergoing continuous development, (b) new machines were added to the system, and (c) measurers had to measure each vertex by using repeated measurements of tracks or measurements on a special cross. At times during this period, measurers operated SMP's that were not optimally

adjusted, which made many remeasurements of individual tracks necessary. The reason for this is that there was a dearth of good diagnostic programs available to the maintenance crew, and they were reluctant to stop the entire system long enough to debug an individual SMP. The present diagnostic program gives enough information for efficient maintenance of our system.

Variation of the measuring rate with individual measurers and type of measured event, is shown in Fig. 6. The key on the side of the figure gives the relationship between the Alvarez Group event-type numbers and the topologies of the events. A fact not contained in the figures should be mentioned. We find a strong correlation between a measurer's rate on Franckensteins and that on the SMP.

Figure 5, c and d, gives the integral number of events produced in two-week periods. Our total production is limited by the number of measurers. At present, we have approximately 30 full time equivalents (F. T. E.) for measuring, out of a total staff of 60 F. T. E.'s. The sum of 11 000 events measured on Franckenstein and SMP in two weeks implies a capability of approximately 300 000 events per year. We expect this capability to increase by from 25 to 50% with improvements in the SMP executive program and a shift of measuring personnel from Franckensteins to SMP's.

Table I. Percentage of fitted and rejected events for the K-63 and π-63 experiments[a]

	K-63		π^+-63	
	SMP	Franck-enstein	SMP	Franck-enstein
Number of measurements	26 145	15 589	11 197	17 936
Percent rejected at or before track processing	13.4	16.3	4.7	7.7
Percent failing to fit hypotheses tested	14.1	10.4	2.4	14.3
Percent fitting kinematics hypothesis	72.5[b]	73.3[b]	92.9[b]	78.0[b]

a. These events were measured between August 1963 and May 1964.

b. For some 5 to 10% of these events χ^2 is still too high for final acceptance.

REFERENCES

1. Robert L. Hulsizer, Nucl. Instr. Methods 20, 384 (1963); W. E. Humphrey, "Programming for the SMP," in Proceedings of the Conference on Programming for HPD and Other Flying-Spot Devices, College de France, Paris, August 21-23, 1963, CERN Report 63-36, 1963, p. 41.
2. P. G. Davey, R. L. Hulsizer, W. E. Humphrey, J. H. Munson, R. R. Ross, and A. J. Schwemin, The Scanning and Measuring Projector, Lawrence Radiation Laboratory Report UCRL-11154 Rev., December 6, 1963 (to be published in Rev. Sci. Instr.).
3. For a more detailed description of the Alvarez-group data-analysis system see Rosenfeld and Humphrey, Ann. Rev. Nucl. Sci. 13, 103 (1963).

FIGURE LEGENDS

Fig. 1. Overall view of an SMP showing the viewing screen (center), typewriter (right), projector (left) and electronics rack (top center).

Fig. 2. Cross sectional view of the digitizing system, showing (a) light ray incident from film projector, (b) motor rotor, (c) motor stator, (d) white viewing curtain, (e) periscope mirrors, (f) rotating drum with magnetic recording, (g) photomultiplier tube, (h) light-collector assembly (follows motion of periscope assembly), (i) glass bench-mark plate (bench marks are contact-printed onto emulsions), (j) magnetic-recording pickup heads to detect drum azimuth, and (k) ball bearings.

Fig. 3. Measurement of a straight line on the SMP. The SMP least count can be seen as the distance between vertical lines of points. Divide linear scales by ~ 15 to estimate corresponding distances in the film plane.

Fig. 4. Flow of data in the K-63 and π-63 experiments. The asterisk indicates points where the library system (LINGO) interacts with the main event-analysis system.

Fig. 5. Rates of measurement on (a) and (c) SMP's and (b) and (d) Franckensteins (a) and (b) show events measured per measuring hour averaged over two-week periods. The average is the ratio of all events measured in two weeks divided by the total measuring time. (c) and (d) show total events measured for two-week periods. Machines are not scheduled for all hours because of a lack of man-power.

Fig. 6. Distribution of measuring rate among measurers, with a breakdown of topologies measured. The topology associated with an event type is given on the figure. "Useful" events are those for which each track of the event was successfully reconstructed in space.

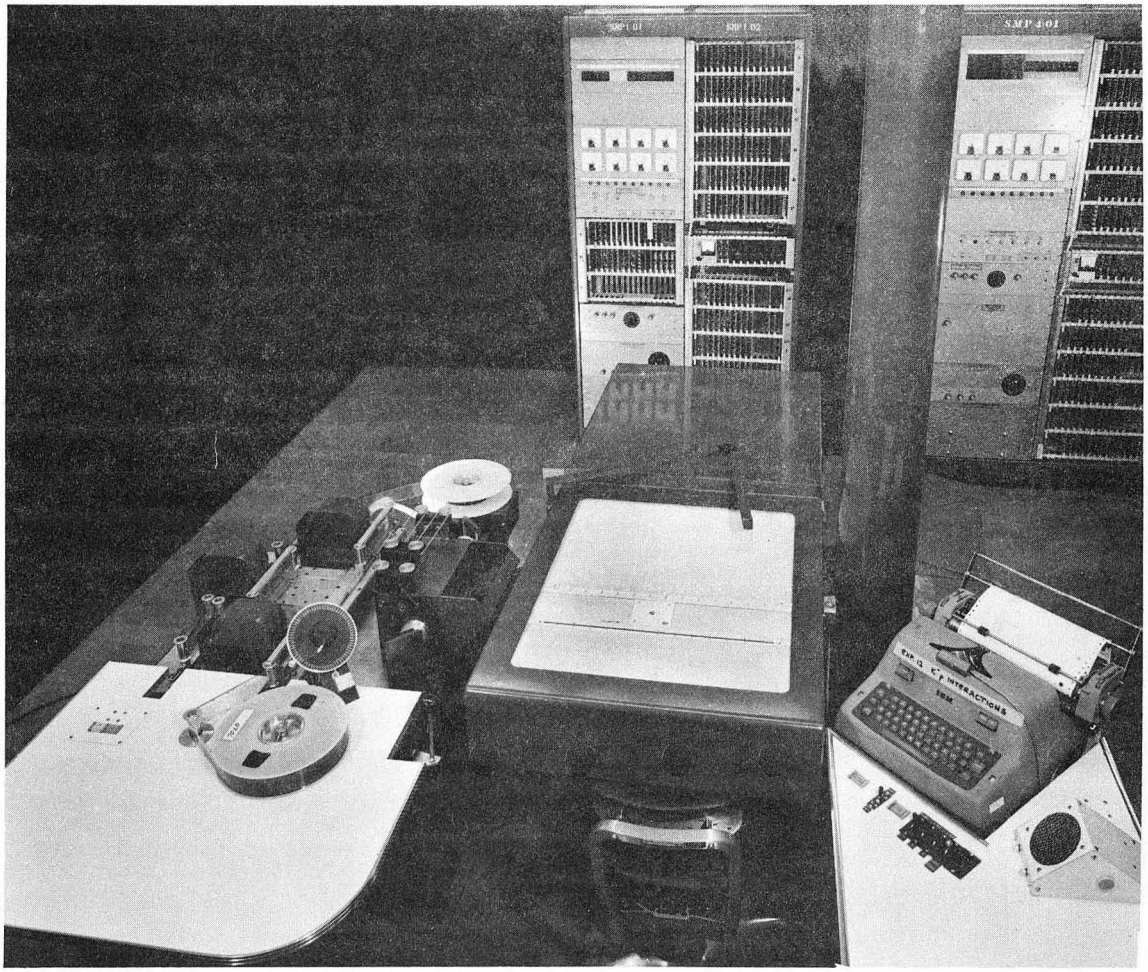

ZN-4358

Fig. 1

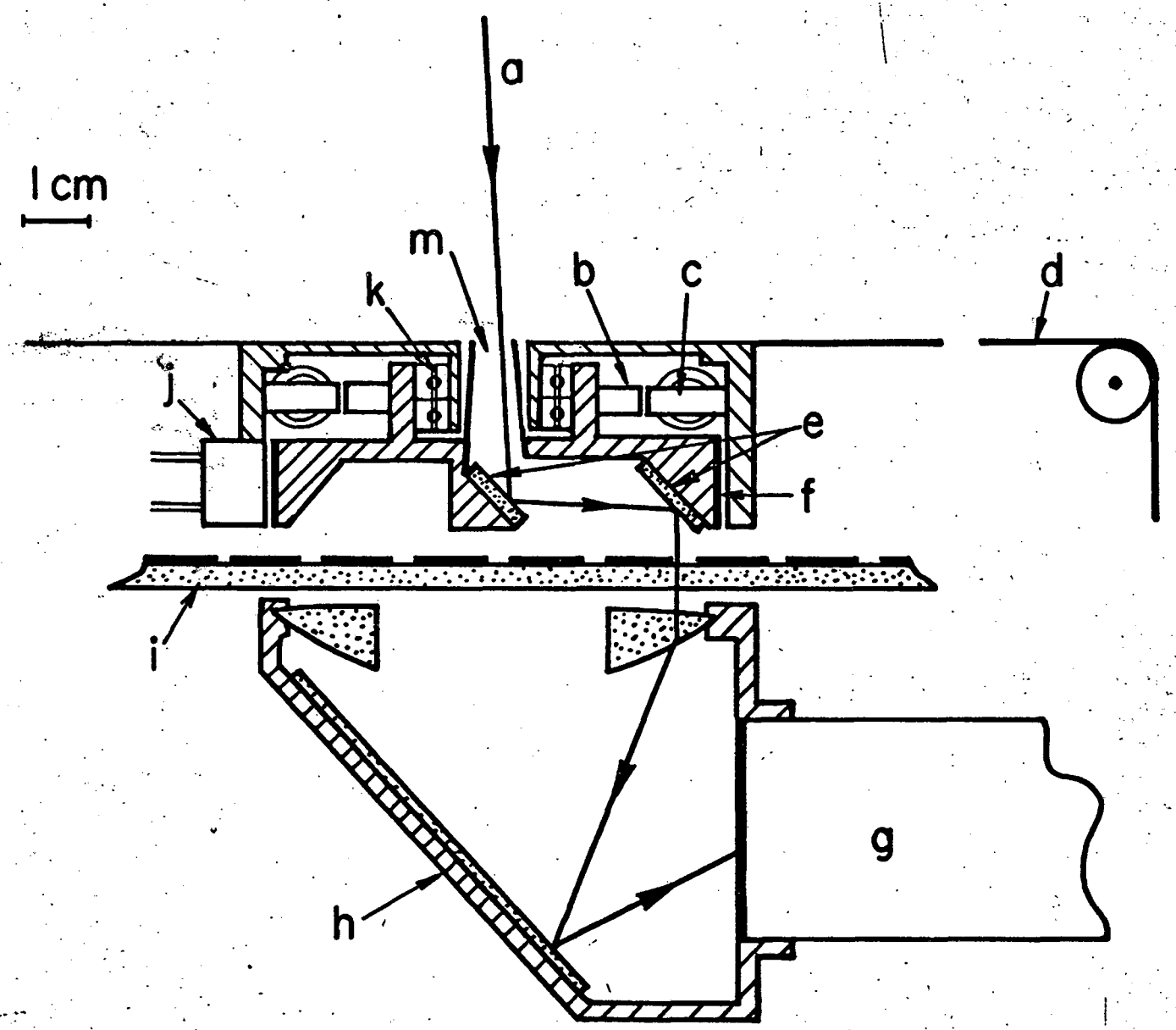

Fig. 2

MU-30830

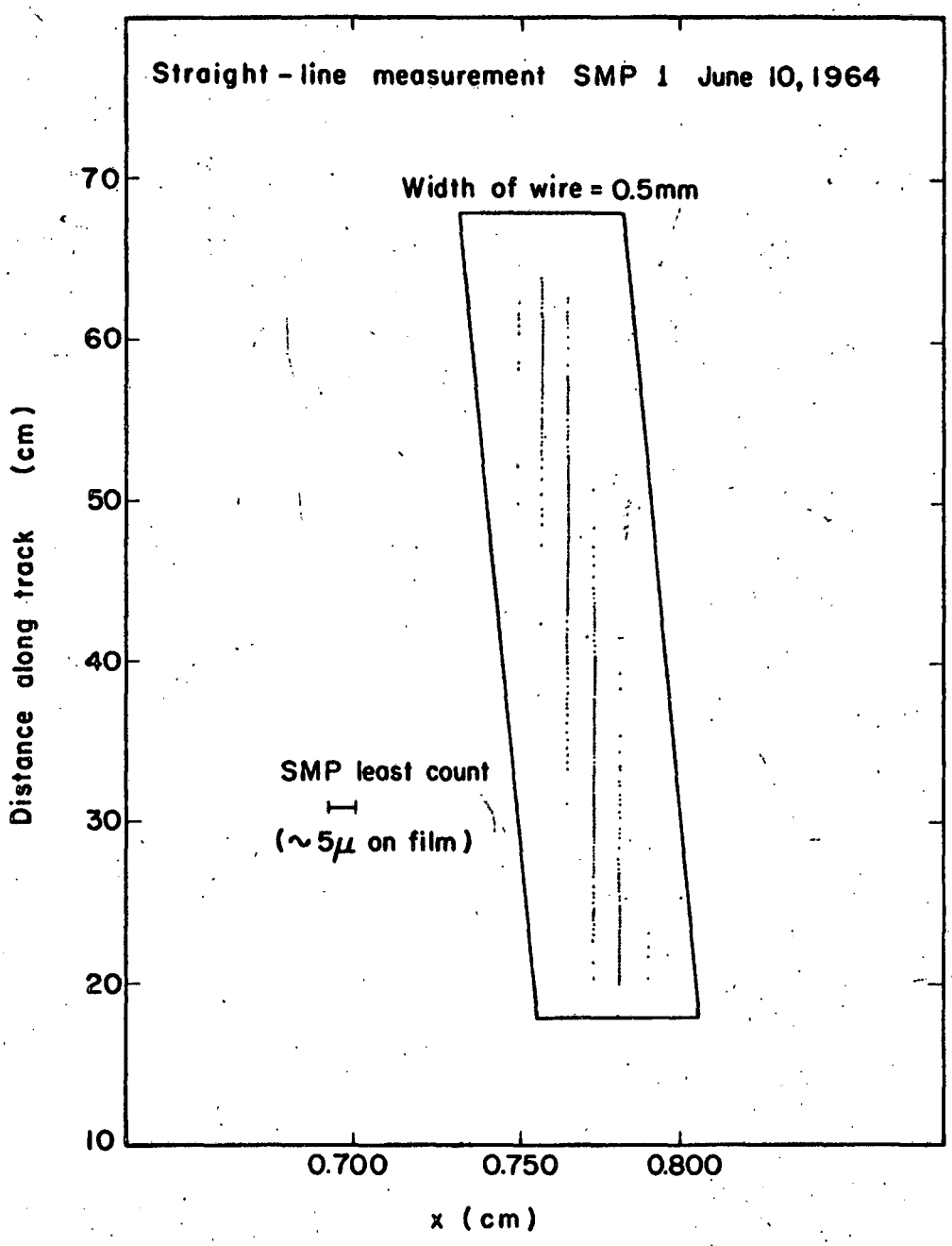

MUB-3312

Fig. 3

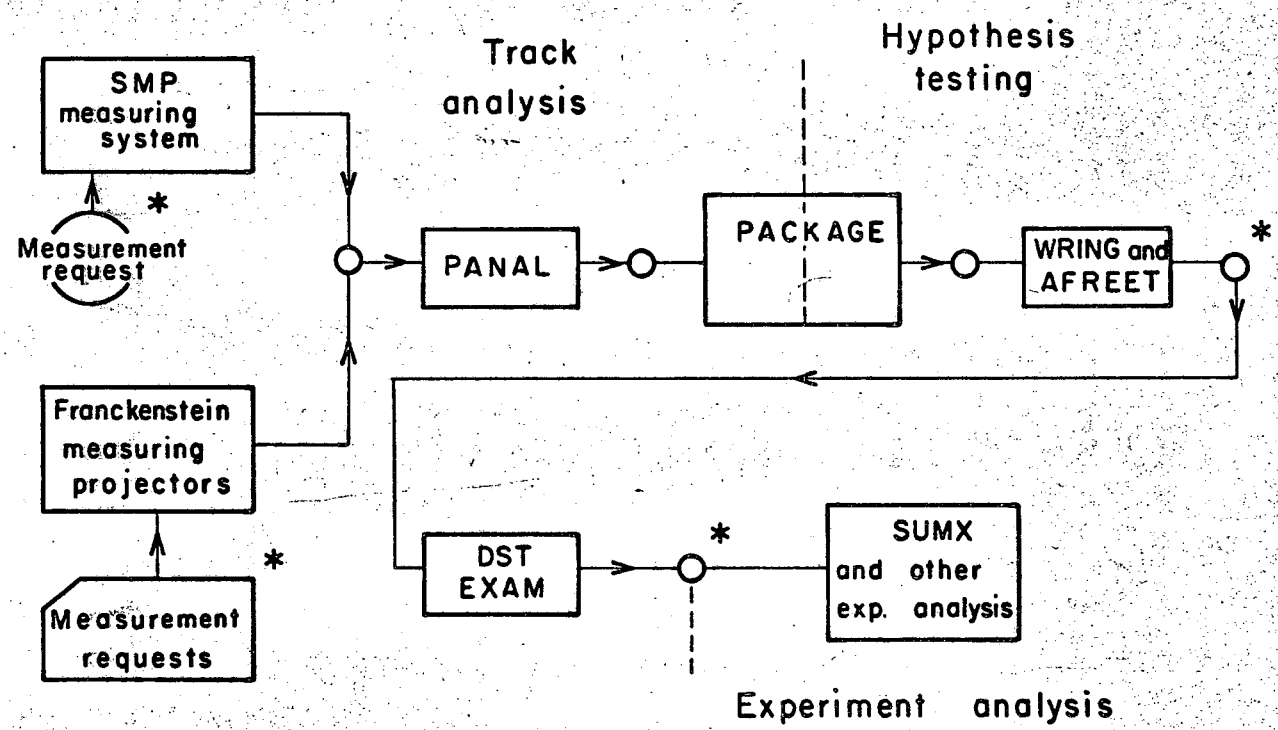

MUB-3313

Fig. 4

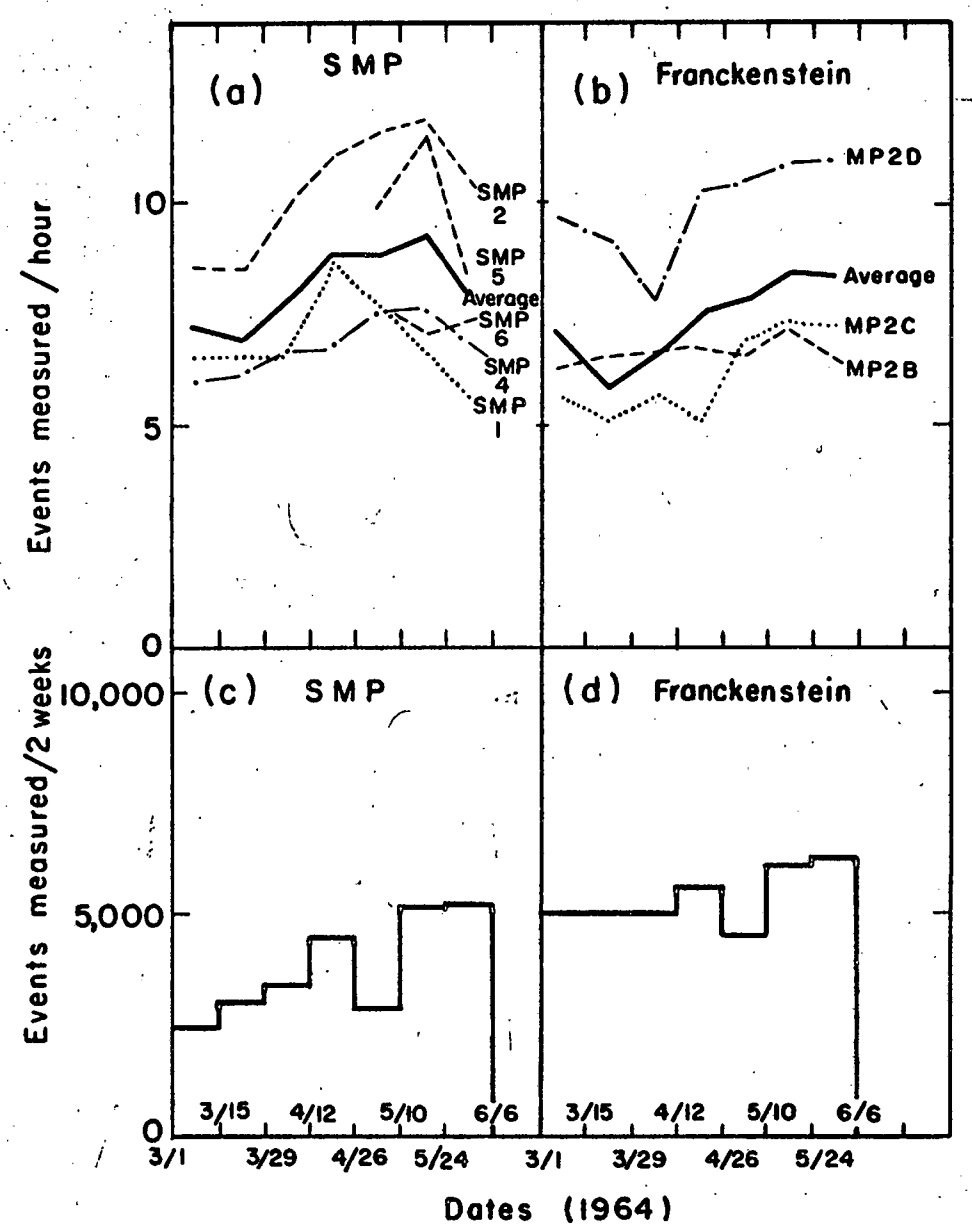

MUB-3315

Fig. 5

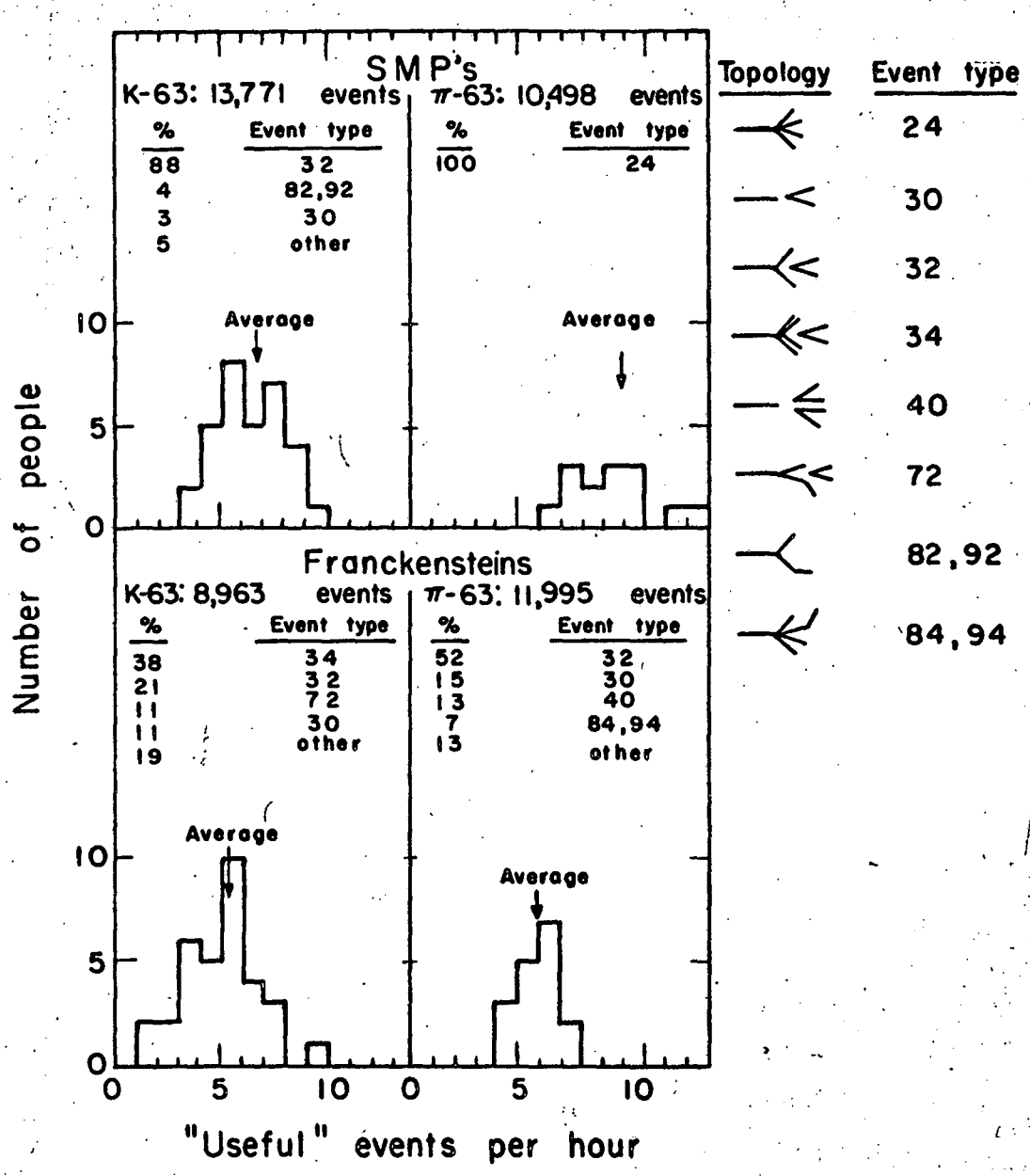

MUB-3314

Fig. 6

This report was prepared as an account of Government sponsored work. Neither the United States, nor the Commission, nor any person acting on behalf of the Commission:

A. Makes any warranty or representation, expressed or implied, with respect to the accuracy, completeness, or usefulness of the information contained in this report, or that the use of any information, apparatus, method, or process disclosed in this report may not infringe privately owned rights; or

B. Assumes any liabilities with respect to the use of, or for damages resulting from the use of any information, apparatus, method, or process disclosed in this report.

As used in the above, "person acting on behalf of the Commission" includes any employee or contractor of the Commission, or employee of such contractor, to the extent that such employee or contractor of the Commission, or employee of such contractor prepares, disseminates, or provides access to, any information pursuant to his employment or contract with the Commission, or his employment with such contractor.