UCRL-11468

University of California

Ernest O. Lawrence Radiation Laboratory

DI-PION MASS SPECTRUM FROM $\pi^- p$ COLLISIONS AT 4 BeV/c

TWO-WEEK LOAN COPY

This is a Library Circulating Copy which may be borrowed for two weeks. For a personal retention copy, call Tech. Info. Division, Ext. 5545

DISCLAIMER

This document was prepared as an account of work sponsored by the United States Government. While this document is believed to contain correct information, neither the United States Government nor any agency thereof, nor the Regents of the University of California, nor any of their employees, makes any warranty, express or implied, or assumes any legal responsibility for the accuracy, completeness, or usefulness of any information, apparatus, product, or process disclosed, or represents that its use would not infringe privately owned rights. Reference herein to any specific commercial product, process, or service by its trade name, trademark, manufacturer, or otherwise, does not necessarily constitute or imply its endorsement, recommendation, or favoring by the United States Government or any agency thereof, or the Regents of the University of California. The views and opinions of authors expressed herein do not necessarily state or reflect those of the United States Government or any agency thereof or the Regents of the University of California.

Proceedings of the International Conference on
High Energy Physics - Dubna, USSR, 1964.

UCRL-11468

UNIVERSITY OF CALIFORNIA
Lawrence Radiation Laboratory
Berkeley, California

AEC Contract No. W-7405-eng-48

DI-PION MASS SPECTRUM FROM π^- p COLLISIONS AT 4 BEV/C

D. Keefe, L. T. Kerth, C. M. Noble, J. J. Thresher,
W. A. Wenzel, and T. F. Zipf

July 10, 1964

DI-PION MASS SPECTRUM FROM π^- p COLLISIONS AT 4 BEV/C

D. Keefe, L. T. Kerth, C. M. Noble, J. J. Thresher,
W. A. Wenzel, and T. F. Zipf

Lawrence Radiation Laboratory
University of California
Berkeley, California

July 10, 1964

ABSTRACT

The final-state π-π interaction in the process $\pi^- + p \rightarrow \pi^+ + \pi^- +$ (missing mass) has been studied at an incident momentum of 4 Bev/c by means of a magnetic spectrometer using spark chambers.[1] A lead and scintillator "sandwich" counter system surrounding part of the hydrogen target rejected highly inelastic events to enhance detection of the $\pi^+\pi^-n$ final state. About 2000 out of the 6000 measured two-prong events were identified as $\pi^+\pi^-n$. With a resolution in missing mass of ± 90 Mev, the $\pi^+\pi^-n+(n\pi^0)$ background in the $\pi^+\pi^-n$ sample is reduced to a few percent. The resolution in the di-pion mass is less than ± 20 Mev.

---

(1) A Magnetic Spectrometer Using Spark Chambers to Obtain Large Solid Angle and High Resolution in π-π Interaction Studies, Nuc. Instr. Meth. 20, 171-172 (1963).

DI-PION MASS SPECTRUM FROM π^- p COLLISIONS AT 4 BEV/C[f,δ]

D. Keefe, L. T. Kerth, C. M. Noble, J. J. Thresher,*
W. A. Wenzel, and T. F. Zipf**

Lawrence Radiation Laboratory
University of California
Berkeley, California

July 10, 1964

INTRODUCTION

A spark chamber experiment to investigate the final state pion-pion interaction in the process $\pi^- + p \rightarrow \pi^+ + \pi^- +$ (missing mass) has been carried out at the Bevatron. To limit the final state pions to a small forward cone and maintain a minimum four-momentum transfer close to zero, an incident momentum of 4 BeV/c, the maximum consistent with reasonable fluxes at the Bevatron, was selected.

EXPERIMENTAL ARRANGEMENT

The experimental apparatus is shown in Fig. 1. The hydrogen target is surrounded by a lead scintillator "sandwich" except at the entrance and exit. These counters strongly discriminate against final states with

---

[f] This work was done under the auspices of the U. S. Atomic Energy Commission.

[δ] For presentation at the 1964 International Conference on High Energy Physics, Dubna, U.S.S.R., August 5-15, 1964.

* Present Address: National Institute for Research in Nuclear Science
Rutherford High Energy Laboratory
Didcot, Berkshire, England

** Present Address: Brookhaven National Laboratory
Upton, Long Island, New York

neutral pions and/or more than two charged particles. The details of the spectrometer and spark chambers are discussed in Reference 1.

BIASES

This experiment, though very accurate in measuring the momenta and angles of the final state pions, is extremely biased against very large di-pion masses and large momentum transfers.

The detection efficiency is roughly constant for di-pion masses up to 500 MeV, decreases monotonically up to 1100 MeV, and is very small for higher mass values.

This bias is mainly due to the limited magnet aperture which was sensitive to an angular range of $\pm 45^{\circ}$ horizontally and $\pm 8\frac{1}{2}^{\circ}$ vertically.

DATA ANALYSIS

Of the 70,000 photographs taken, only 6000 contained two-prong events. The rest could be attributed to false triggers, interactions in the spark chambers, and multiple tracking. All of these 6000 events were measured on a SCAMP[2] measuring projector.

The events were then processed by an IBM 7044 program system which did the necessary spatial reconstruction and calculations for each event.

Possible two-prong final states are

1. $\pi^- + p$
2. $\pi^- + p + n\pi^0$
3. $K^+ + K^- + N$
4. $K^+ + K^- + N + n\pi^0$
5. $e^+ + e^- + N$
6. $\pi^+ + \pi^- + N$
7. $\pi^+ + \pi^- + N + n\pi^0$'s
8. Associated production of strange particles

[2] Hodges, et al. UCRL-10251, May 25, 1962.

The elastic scatters are strongly discriminated against because of the necessarily large opening angle ($> 62^{\circ}$). Also if they are treated as a $\pi^+\pi^-$ event, the calculated di-pion mass is always greater than 1.1 BeV.

Event types 2, 4, and 7 all have at least one π^0 and thus were rejected to a large extent by the lead "sandwich" counters.

The probability of producing K^+, K^- is small compared with pion production. Selove, et al.[3] have shown that the K^+,K^- events at worst produce a smooth background if mistakenly identified as $\pi^+\pi^-$ events.

From missing mass measurements the ratio of (6) to (7) is 10 to 1 for $-\Delta^2 < 9$ and 1 to 10 for $-\Delta^2 > 9$. Thus for small momentum transfer the background is approximately 10%.

The two-prong events from associated production have a low production cross section.

RESULTS

Fig. 1 clearly suggests two resonances in the 700 to 800 MeV di-pion mass region. It is interesting to note that the minimun in the distribution is at 760 MeV, very near the generally accepted mass value of the ρ meson.

Statistically this data is not compatible with a single resonance. The probability of obtaining this sample of data from a single Breit-Wigner curve is less than one part in 5000.

The large momentum transfer data (Fig. 3) is composed mostly of $\pi^+ + \pi^- + N$ + neutrals and is consistent with a single resonance at the ρ mass. The apparent enhancement at low values of di-pion mass is expected from phase space considerations and the geometric bias. Analysis is being carried out to obtain the angular distributions of the two resonances and the geometric bias involved.

---

(3) Selove, et al., Phys. Rev. Letters 9, 272 (1962).

Considerable data at 2 and 3 BeV/c incident momenta has been obtained using the same apparatus and is under similar analysis at this time.

FIGURE LEGENDS

Fig. 1 Experimental set-up at Bevatron.

Fig. 2 $\pi^- + p \rightarrow \pi^+ + \pi^- + MM$ for $-\Delta^2 \leq 9\mu^2$ a total of 1391 events. 90% are $\pi^+\pi^-n$.

Fig. 3 $\pi^- + p \rightarrow \pi^+ + \pi^- + MM$ for $-\Delta^2 > 9\mu^2$ a total of 1025 events. 90% are $\pi^+\pi^-n$ + at least one π^o.

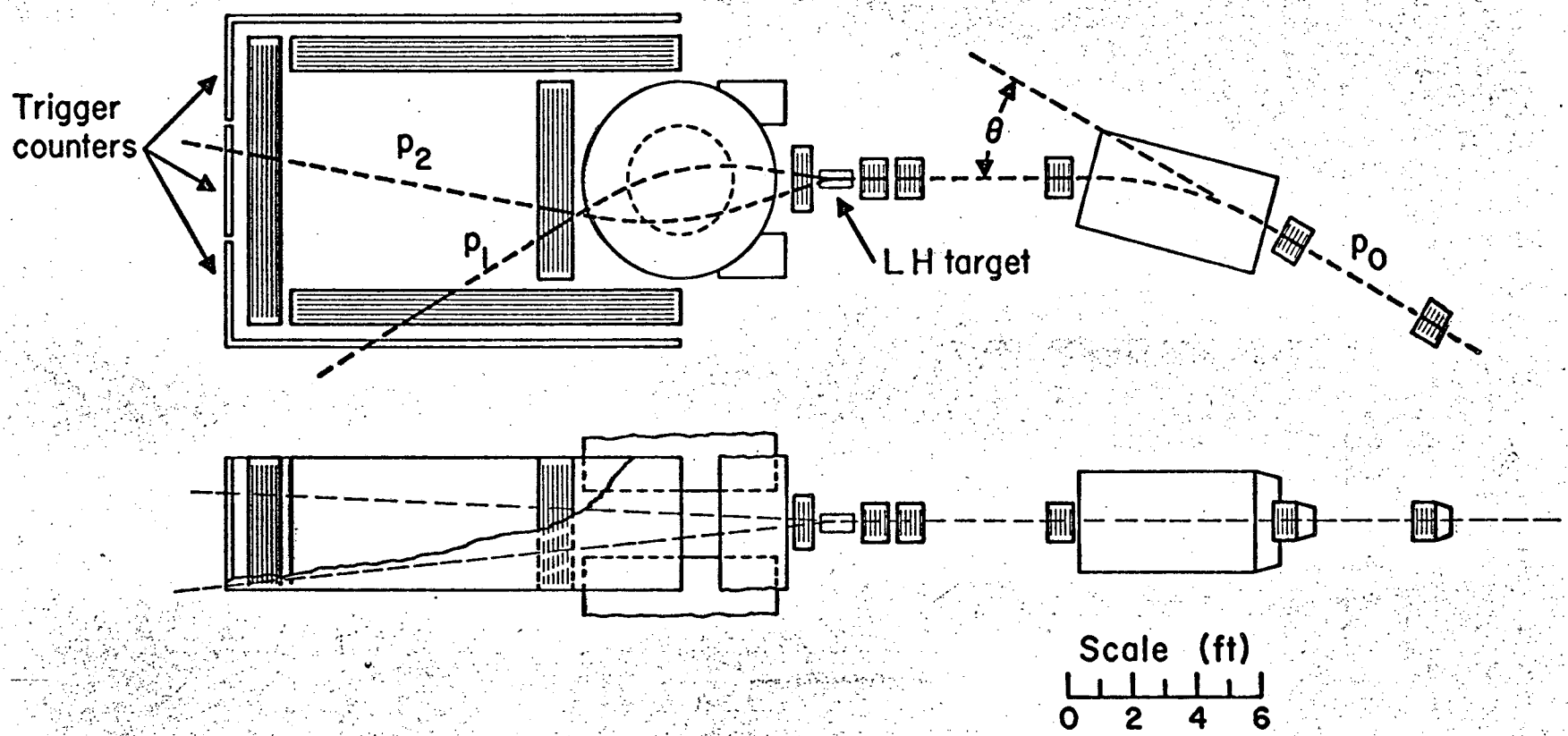

MU-26580

Fig. 1

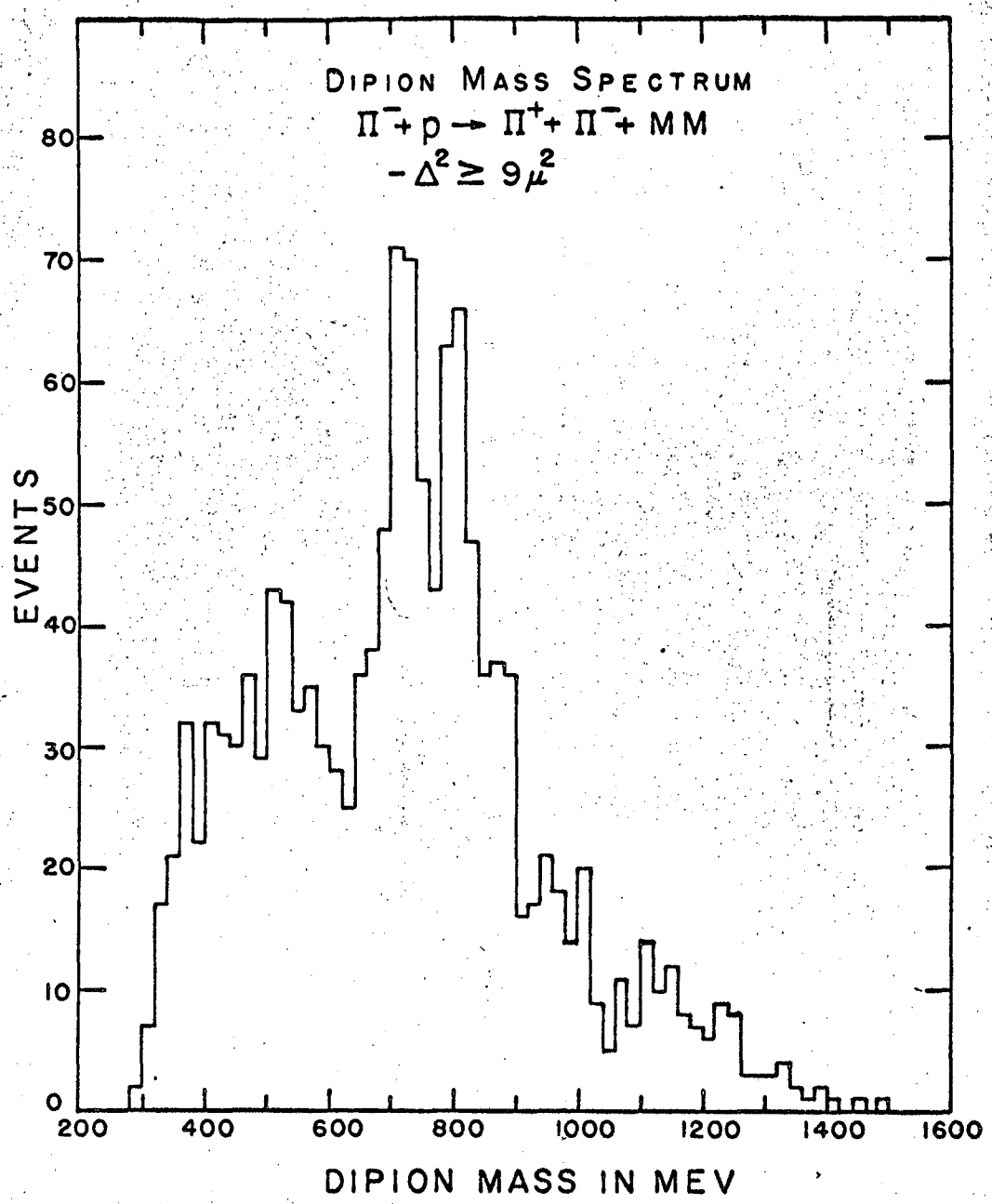

MUB-3405

Fig. 2

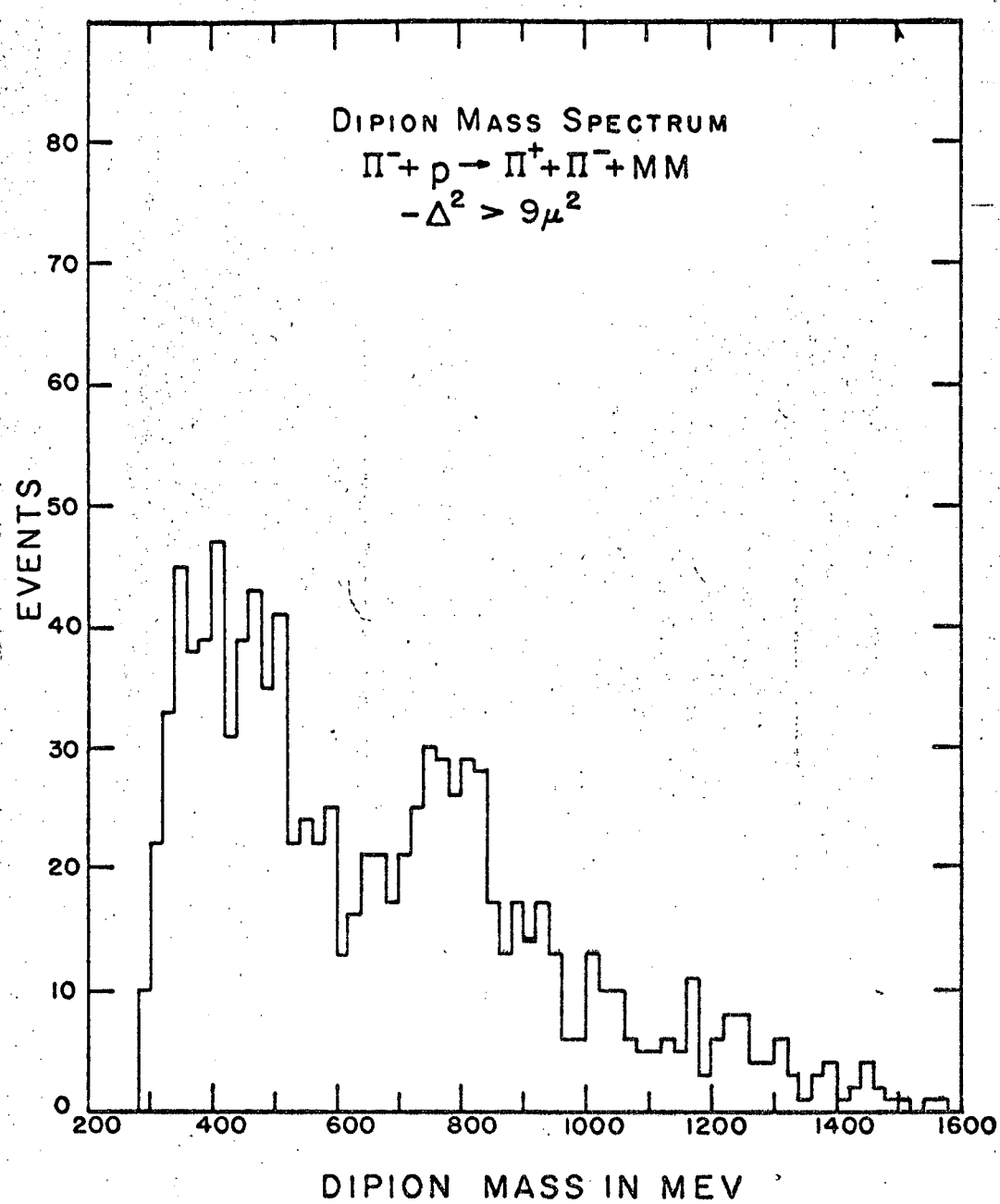

MUB-3404

Fig. 3

This report was prepared as an account of Government sponsored work. Neither the United States, nor the Commission, nor any person acting on behalf of the Commission:

A. Makes any warranty or representation, expressed or implied, with respect to the accuracy, completeness, or usefulness of the information contained in this report, or that the use of any information, apparatus, method, or process disclosed in this report may not infringe privately owned rights; or

B. Assumes any liabilities with respect to the use of, or for damages resulting from the use of any information, apparatus, method, or process disclosed in this report.

As used in the above, "person acting on behalf of the Commission" includes any employee or contractor of the Commission, or employee of such contractor, to the extent that such employee or contractor of the Commission, or employee of such contractor prepares, disseminates, or provides access to, any information pursuant to his employment or contract with the Commission, or his employment with such contractor.