UCRL-11492

University of California

Ernest O. Lawrence Radiation Laboratory

TWO-WEEK LOAN COPY

This is a Library Circulating Copy which may be borrowed for two weeks. For a personal retention copy, call Tech. Info. Division, Ext. 5545

SEMI-CONDUCTOR PROBE FOR INVESTIGATING ACCELERATOR BEAM PULSES

Berkeley, California

DISCLAIMER

This document was prepared as an account of work sponsored by the United States Government. While this document is believed to contain correct information, neither the United States Government nor any agency thereof, nor the Regents of the University of California, nor any of their employees, makes any warranty, express or implied, or assumes any legal responsibility for the accuracy, completeness, or usefulness of any information, apparatus, product, or process disclosed, or represents that its use would not infringe privately owned rights. Reference herein to any specific commercial product, process, or service by its trade name, trademark, manufacturer, or otherwise, does not necessarily constitute or imply its endorsement, recommendation, or favoring by the United States Government or any agency thereof, or the Regents of the University of California. The views and opinions of authors expressed herein do not necessarily state or reflect those of the United States Government or any agency thereof or the Regents of the University of California.

For Nuclear Instruments and Methods

UCRL-11492

UNIVERSITY OF CALIFORNIA
Lawrence Radiation Laboratory
Berkeley, California

AEC Contract No. W-7405-eng-48

SEMI-CONDUCTOR PROBE FOR INVESTIGATING ACCELERATOR BEAM PULSES

H. E. Conzett, L. B. Robinson, and R. N. Burger

June 1964

SEMI-CONDUCTOR PROBE FOR INVESTIGATING ACCELERATOR BEAM PULSES

H. E. Conzett, L. B. Robinson, and R. N. Burger

Lawrence Radiation Laboratory
University of California
Berkeley, California

June 1964

ABSTRACT

An instrument which makes possible the investigation of individual beam pulses from a cyclotron is described. It utilizes a fully depleted diffused-silicon junction detector of 100-200 microns thickness. The detector characteristics of fast charge collection time (~ 1 ns) and of inherent amplification are important in this application. Examples of the detector system response to beams from the Berkeley sector-focused cyclotron are presented.

SEMI-CONDUCTOR PROBE FOR INVESTIGATING ACCELERATOR BEAM PULSES

H. E. Conzett, L. B. Robinson, and R. N. Burger
Lawrence Radiation Laboratory
University of California
Berkeley, California

June 1964

INTRODUCTION

In the operation of the Berkeley 88-inch sector-focused (isochronous) cyclotron[1]), a knowledge of the phase of the beam with respect to the r.f. accelerating voltage has been important, both for reasons of theoretical interest and for diagnosis of machine operation. A determination of the radial variation of the phase of the circulating beam provides a measure of the degree to which the isochronous condition, that of maintaining constant phase throughout the acceleration process, has been achieved; and these phase values can be compared with those calculated from measured or computed knowledge of the magnetic field. Also, these phase measurements provide the means through which trim coil adjustments to the field can be made in order to best achieve the isochronous condition for the several different particles and many different energies available[2]).

Instruments used for this kind of measurement have typically been direct beam pickup probes with the pulses amplified and displayed on a sampling oscilloscope[3]). Such an oscilloscope samples a small part of each of a series of recurring pulses, and thus displays a pulse shape which constitutes an average over many separate pulses. Hence, detailed information on possible variations of beam intensity among different r.f. cycles, as well as within a single cycle, may be lost.

In order to circumvent these disadvantages, a probe has been designed which utilizes the favorable characteristics of the semi-conductor detector[4]), namely, the fast charge collection time (~ 1 ns) and the inherent amplification

provided by the formation of one electron-hole pair (in silicon) for each 3.6 eV of energy loss in the detector. For example, an 80 MeV alpha particle loses 4.9 MeV in traversing a 250 micron depletion region of a silicon detector, and so provides approximately 1.5×10^6 electron-hole pairs for collection.

DESCRIPTION

Figures 1 and 2 show, respectively, the detector probe layout and the electrical circuit.

Diffused silicon detectors with oxide protected junction edges were used. All were made of high resistivity (4000 ohm-cm p-type) silicon with phosphorus diffused N^+ fronts and boron diffused P^+ backs[5]). Detector thicknesses ranged from 100 to 250 microns so that the detectors were fully depleted at bias voltages less than 200 V. All detectors used would support a bias voltage of 300 volts with a few microamps of leakage current.

For a detector made of p-type material of thickness W, which is fully depleted at bias voltage V_p, and an applied voltage V_a, the maximum collection time for a charge produced in the detector is given by:

$$t = \frac{W^2}{2 V_p \mu} \cdot \ln \frac{V_a + V_p}{V_a - V_p}, \quad (V_a > V_p)$$

where μ is the charge mobility in the detector. The punch through voltage is given approximately by:

$$V_p \simeq \frac{10^9 \cdot W^2}{\rho}$$

where ρ is the detector resistivity, and W is in cm.

This maximum collection time for electrons varies from 0.2 ns for a detector 100 microns thick to 4 ns for a thickness of 250 microns, when V_a = 200 volts.

The r-c time constants of the detection system must also be considered. The small area 100 micron detectors have capacitance of about 30×10^{-12} farads. When feeding a 125 ohm cable this gives a time constant of $125 \times 3 \times 10^{-11} \approx 4$ ns. In order to reduce this time constant, the 125 ohm cable was shunted with about 35 ohms. The cable was terminated by 125 ohms at the other end, so that reflections presented no problem.

To avoid the need for amplification, with the resulting increase in rise time, a detector of 250 microns thickness was mounted directly in the external cyclotron beam. With a 33 MeV α-particle beam of the order of 0.1 μA average intensity, each beam pulse produced an electrical pulse from the detector of the order of 10 volts across the load (about 25 ohms). The detector output appeared to vary linearly with beam intensity even at this high level. The pulses were displayed on a Tektronix 519 oscilloscope which has a calibrated rise time of 0.27 ns for single pulses, but has only about 9 V/cm sensitivity.

The detector leakage increases quite rapidly upon exposure to the beam. Damage is caused by particle bombardment (0.1 μA = 3×10^{11} d-particles per second) and possibly also by the heat generated by the hole-electron ion current produced in the detector (0.5 A peak pulses at 250 V give a peak of 100 watts). Fortunately, the large output signal means that large leakage currents are not troublesome, however, after 15 minutes exposure to the beam the detector would not support more than 200 V bias, so it was discarded.

In order to lengthen the useful life of the detector, a simple shutter arrangement (shown in Figure 1) was installed to intercept the beam just upstream of the detector. This shutter consists of a carbon finger attached to the armature of a standard relay. A pulse generator was used to energize the shutter relay for 50 msec. at 1 sec. intervals and to trigger sweeps on the oscilloscope. These sweep trigger pulses were delayed approximately 20 msec. to allow the shutter to open completely before the detector pulses were displayed and photographed.

RESULTS

Examples of the results obtained[6]) are shown in figs. 3 and 4. Figure 3 displays the detector response to single beam pulses with the cyclotron oscillator set at the resonant frequency, f_o , and at nearby frequencies. These pulses can be compared and correlated with independently determined information on the distribution in phase of the internal beam pulses[6,7]). The pulses of fig. 3 were produced with a 250 micron detector operating with $V_a \approx V_p$. The long tails on the pulses were probably caused by the long collection time for electrons produced near the back of the detector. Figure 4 shows examples of some 60 to 70 beam pulses per oscilloscope sweep. Modulations of the beam over several to many r.f. cycles are apparent. Clearly, investigations of beam modulation with respect to variations of the cyclotron parameters will provide information useful to the operation and understanding of the machine.

CONCLUSIONS

The semi-conductor detector has proved to be very useful in providing detailed information about the external beam of the Berkely 88-inch cyclotron. It should be possible to adapt it for use as an internal beam probe, also. Applications to beam monitoring or beam studies on other accelerators may be enhanced by such simple changes as, for example, scattering the beam from a target foil into the detector.

ACKNOWLEDGMENTS

We are very indebted to F. S. Goulding and W. Hansen for advice and assistance concerning the use of the Si detector, to R. F. Burton and D. R. Elo for the design of the probe assembly, and to H. A. Grunder and F. B. Selph for providing us with examples of their results prior to publication.

REFERENCES

1. E. L. Kelly, Nucl. Inst. and Meth. 18,19, 33 (1962).

2. H. A. Grunder and F. B. Selph, Proceedings of International Conference on Sector-Focused Cyclotrons, CERN 63-19, edited by F. T. Howard and N. Vogt-Nilsen, p. 9, May 1963.

3. G. G. Dols, Nucl. Inst. and Meth. 18,19, 595 (1962); W. H. White, Jr., B. Duelli, and R. J. Jones, Nucl. Inst. and Meth. 18,19, 60 (1962).

4. G. L. Miller, W. M. Gibson, and P. F. Donovan, Ann. Rev. of Nuc. Science 12, 189 (1962); Fred S. Goulding, Nucleonics 22, No. 5, 54 (1964).

5. W. L. Hansen and F. S. Goulding, Oxide Passivated Silicon p-n Junction Particle Detectors, UCRL-11227, January 1964.

6. H. A. Grunder and F. B. Selph, Operation of the 88-inch Cyclotron, UCRL-11477, June 1964.

7. A. A. Garren and Lloyd Smith, reference 2, page 18.

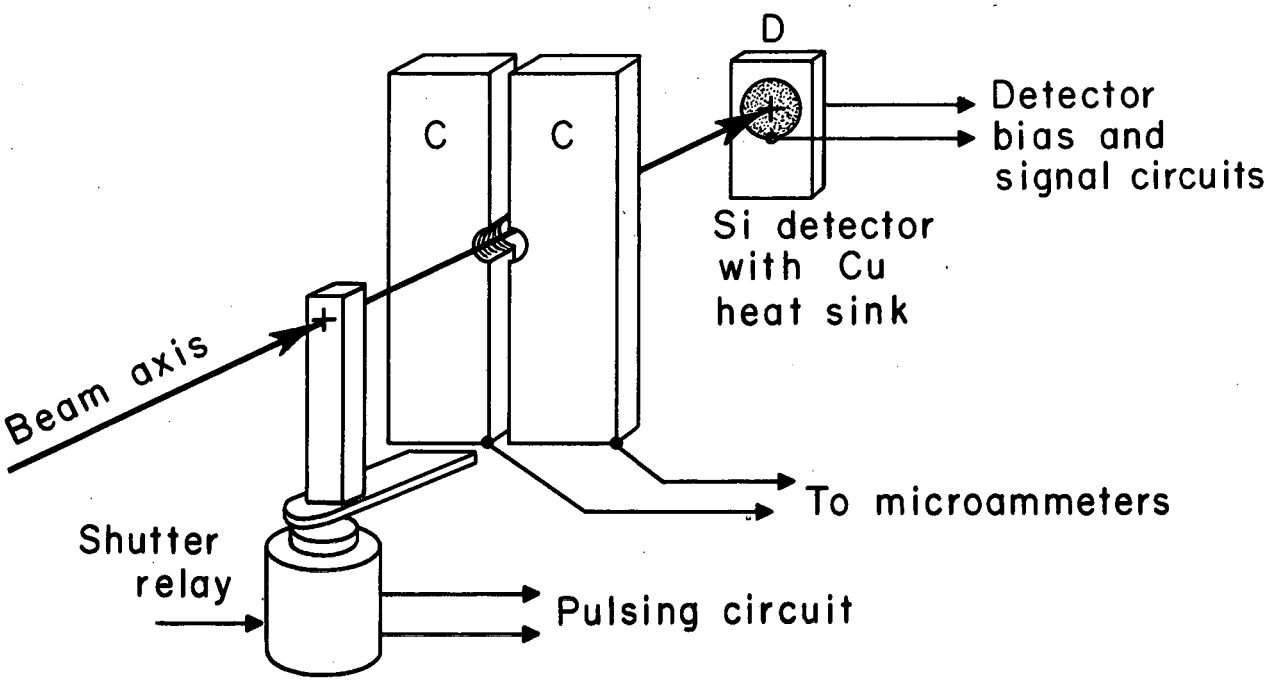

MUB-3224

Fig. 1. Probe layout. S is a carbon shutter which protects the detector from the beam between measurements. C is a carbon beam-collimation and centering device; beam current on each half can be metered. D is the silicon detector, soldered to a water-cooled copper mounting plate which serves as a heat sink.

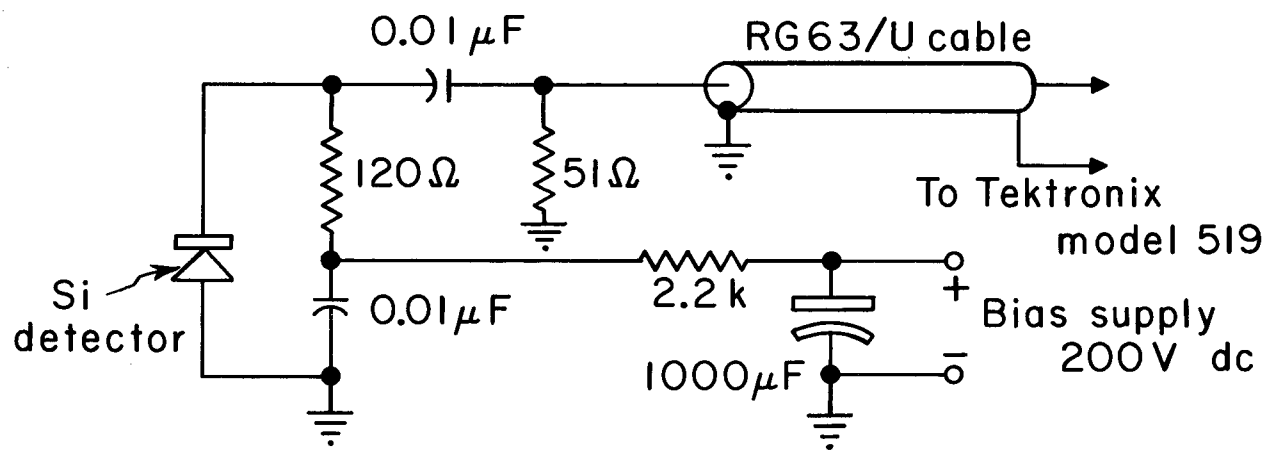

MUB-3225

Fig. 2. Schematic of electrical circuitry.

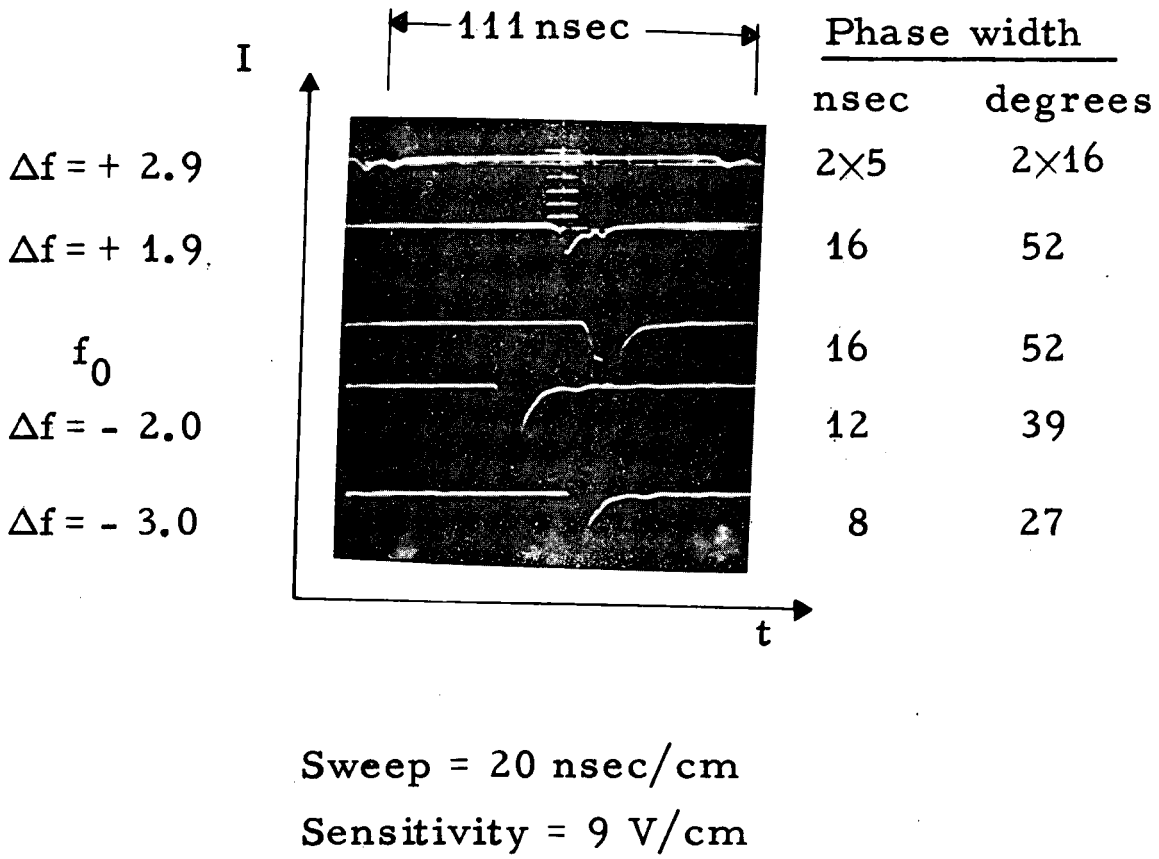

ZN-4327

Fig. 3. Detector response to external beam of 65-MeV alpha particles. The cyclotron resonant frequency was f_0 = 8965.6 kc/sec. Between successive single sweeps the only experimental parameter changed was the cyclotron oscillator frequency. Changes in pulse shape and width under small frequency changes, Δf, are clearly seen. For example, derived information on the beam phase width is indicated on the right. The oscilloscope sweep was not synchronized with the cyclotron oscillator.

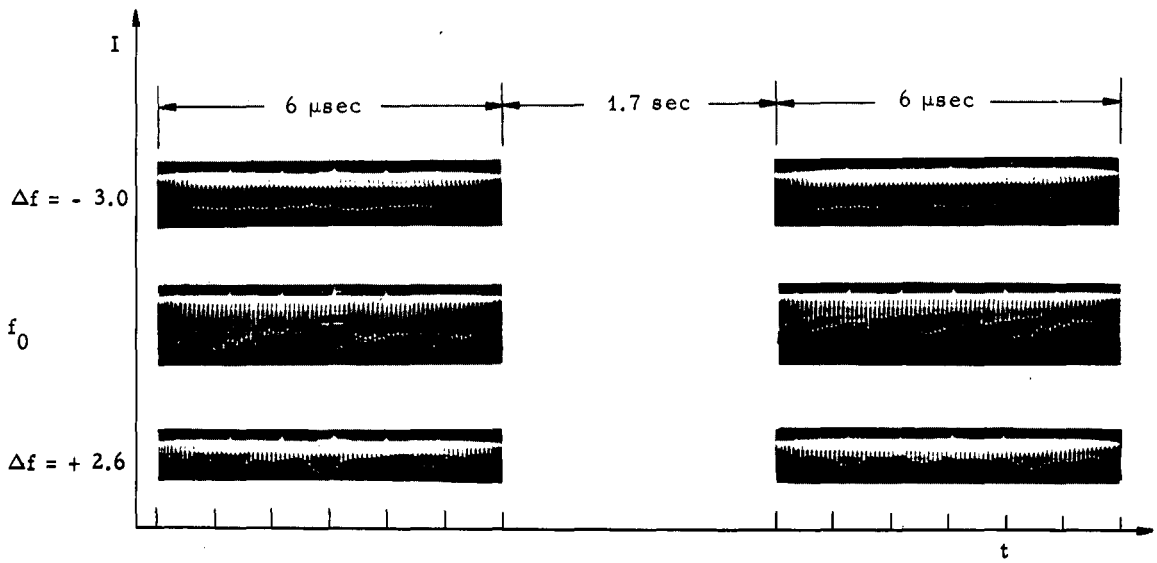

ZN-4328

Fig. 4. Detector response to external beam of 80-MeV alpha particles over 60 to 70 cyclotron r. f. cycles. The resonant frequency was f_0 = 9986.6 kc/sec. Changes in the beam modulation envelope under small frequency changes, Δf, are evident.

This report was prepared as an account of Government sponsored work. Neither the United States, nor the Commission, nor any person acting on behalf of the Commission:

A. Makes any warranty or representation, expressed or implied, with respect to the accuracy, completeness, or usefulness of the information contained in this report, or that the use of any information, apparatus, method, or process disclosed in this report may not infringe privately owned rights; or

B. Assumes any liabilities with respect to the use of, or for damages resulting from the use of any information, apparatus, method, or process disclosed in this report.

As used in the above, "person acting on behalf of the Commission" includes any employee or contractor of the Commission, or employee of such contractor, to the extent that such employee or contractor of the Commission, or employee of such contractor prepares, disseminates, or provides access to, any information pursuant to his employment or contract with the Commission, or his employment with such contractor.