UCRL-11494

University of California

Ernest O. Lawrence Radiation Laboratory

TWO-WEEK LOAN COPY

This is a Library Circulating Copy
which may be borrowed for two weeks.
For a personal retention copy, call
Tech. Info. Division, Ext. 5545

A DIGITAL GAIN STABILIZER FOR A MULTIPARAMETER PULSE-HEIGHT-RECORDING SYSTEM

Berkeley, California

DISCLAIMER

This document was prepared as an account of work sponsored by the United States Government. While this document is believed to contain correct information, neither the United States Government nor any agency thereof, nor the Regents of the University of California, nor any of their employees, makes any warranty, express or implied, or assumes any legal responsibility for the accuracy, completeness, or usefulness of any information, apparatus, product, or process disclosed, or represents that its use would not infringe privately owned rights. Reference herein to any specific commercial product, process, or service by its trade name, trademark, manufacturer, or otherwise, does not necessarily constitute or imply its endorsement, recommendation, or favoring by the United States Government or any agency thereof, or the Regents of the University of California. The views and opinions of authors expressed herein do not necessarily state or reflect those of the United States Government or any agency thereof or the Regents of the University of California.

For
Nucl. Instr.
and
Methods

UCRL-11494

UNIVERSITY OF CALIFORNIA

Lawrence Radiation Laboratory

Berkeley, California

Contract No. W-7405-eng.48

A DIGITAL GAIN STABILIZER FOR A MULTIPARAMETER PULSE-HEIGHT-RECORDING SYSTEM

Michiyuki Nakamura and Richard L. La Pierre

June 16, 1964

A DIGITAL GAIN STABILIZER

FOR A MULTIPARAMETER PULSE-HEIGHT-RECORDING SYSTEM*

Michiyuki Nakamura and Richard L. La Pierre

Lawrence Radiation Laboratory
University of California
Berkeley, California
June 16, 1964

ABSTRACT

A digital gain stabilizer is developed for use with a multiparameter pulse-height-recording system. Corrections are made for gain drifts of any origin in the spectrometer system. Stability of peak channel numbers to 0.1% or better is obtained over extended periods of time without significant loss in resolution.

A method for stabilizing on a peak at any location in the spectrum is described. This method requires only four decimal switches as compared to the many switches normally used. Three decimal switches select the channel location of the stabilizing peak and another sw tch selects the number of channels adjacent to the peak to be included for stabilization.

Gain corrections are introduced into the system by means of a variable-gain amplifier. This provides an inexpensive method for controlling the gain without requiring any alterations to the existing equipment.

1. Introduction

A pulse-spectrometer stabilizing system that uses a digital technique to generate a correction voltage has been described by Ladd and Kennedy[1]. This system takes its information directly from the analyzer store, thereby taking into account all instabilities, including analyzer movements.

Normally, only system gain is stabilized; but if two widely spaced spectral lines are available, both zero and gain may be corrected. The upper peak is used for stabilizing gain and the lower peak for correcting the zero.

Since the techniques for generating both correction signals are similar, we consider gain control only. The counts occurring in a preselected peak are monitored at the analyzer's address scaler. By means of suitable gating, counts occurring in the lower segment of the peak add to the contents of a reversible scaler; similarily, events occuring in the upper segment of the peak subtract counts from the scaler. The net change in the contents of the scaler is equal to the difference in the counting rates of the two segments. The scaler's content is converted to a voltage by means of a digital-to-analog converter. This voltage is used to correct for gain changes.

Several other stabilizing schemes include the analyzer drifts in the stabilized system[2]. The description of one such scheme also contains a good reference list of the various stabilizing methods that have been developed[2]. Dudley et al[2] use a capacitor-type storage device in place of a scaler and digital-to-analog converter.

There is a distinct advantage in the above systems over stabilizers that do not include the multichannel analyzer in the stabilized system[3].

In these latter ones an auxiliary discriminator is often used, and no correction is made for the relative drifts between the auxiliary discriminator and the multichannel analyzer.

We describe in this paper the design and performance of a stabilizing system that uses the digital technique suggested by Ladd and Kennedy. Our different approach requires only four decimal switches for selecting any peak for stabilization.

2. System Description

We wanted a means of stabilizing a multiparameter pulse-height-recording system[4]. After considering the relative amounts of zero and gain drifts normally encountered in spectrometer systems, we felt that stabilization of gain alone would be sufficient. We chose the ditigal approach of Ladd and Kennedy to accomplish this objective for three reasons. First, we felt that their incremental-correction technique would be more adaptable to the wide range of counting rates that the stabilizing system would encounter (from 1 to 500 counts/minute in the peak channel). Second, the ability to interrupt the counting without loss of the generated correction voltage is extremely beneficial, because interruptions of an hour are quite common. And last, we felt that the electronics in the digital stabilizer would be more adaptable to "state of the art" demands as higher resolution detector systems are employed.

A simplified block diagram of the system configuration for recording four parameters is shown in Fig. 1. The recording system is capable of processing as many as ten coincident parameters.

Each detector output is operated on by a variable-gain amplifier inserted between its preamplifier and linear amplifier. The variable-gain amplifier provides a unique method of controlling the system gain and is discussed in Sec. 4.

The operation of the recording system is as follows: The coincident pulses to be analyzed are stored in the temporary pulse-height storage, which is made up of capacitor-type stretchers. The analog content of each stretcher is serially read into the pulse-height-to-time converter (analog-to-digital converter). Each pulse height, in digitized form, is then stored in a specific location in the magnetic-core buffer store. Once the memory is filled, the processing of pulses is momentarily interrupted while the content of the buffer-core store is dumped onto magnetic tape. This cycle continues until the experimenter has gathered enough data.

The information on the magnetic tape can be "stripped" by reading the data back into the buffer-core store. The spectrum for each parameter may then be displayed in the conventional multichannel analyzer mode, the display indicating whether or not reasonable data have been accumulated.

Because of the complexity of the recording system, much engineering time went into the development of the system's control panel. The control panel subsequently developed incorporates a program that is almost fully automatic. Interlock circuitry and indicator lights minimize operator errors in the few manual steps required in the program. We feel that the engineering time that went into the development of the control panel was a good investment. After only a few minutes of instruction, an experimenter can use the system without difficulty.

We wanted to maintain the recording system's flexibility and simplicity in the development of an accompanying stabilizer.

3. Count Sorting With a Null Detection Approach

A limitation in any system similar to the one described by Ladd and Kennedy is the large number of interconnections and switches needed for a flexible system. It can be shown that in order to use, for example, three channels on either side of a peak for stabilization, four decimal switches

plus six toggle switches might be required. For a more flexible system, as many as six decimal switches plus twelve toggle switches might be required.

Unless we took a different approach to selecting a peak and the number of channels to either side, our control panel would become formidable and contribute to operate errors, particularly since we would be stabilizing four parameters simultaneously.

We thus used a null detection scheme for detecting and sorting pulses that fall within the neighborhood of a reference peak. The significance of this approach is manifested by the simple control panel used to introduce stabilization. A photograph of our control panel for stabilizing four parameters (dimensions) is shown in Fig. 2. Referring to the panel, the operator dials in the channel location of the reference peak with the group of three selected channel decimal thumbwheel switches. The other decimal switch, labeled ± window width, selects the number of channels adjacent to the peak to be included for stabilization. (A setting of zero on this switch removes stabilization.) The stabilization trigger switch permits stabilization on a peak in the spectrum (self) or on a specially introduced reference peak (coinc.). An external command is required when the trigger switch is in the coincidence position.

A block diagram of the logic we use, which results in such a simple control panel, is shown in Fig. 3. In the arrangement shown we use the analyzer's address reset pulse to preset the peak-location number P into the binary-coded decimal (BCD) subtract scaler. The pulse train subtracts N counts from this number. If the region used for stabilization is restricted to a maximum of plus or minus 10 channels from the stabilizing peak, the residue in the subtract scaler is:

	Decade's Residue		
	Hundreds	Tens	Units
Region A ($P - 10 < N \leq P$)	0	0	$P - N$
Region B ($P < N \leq P + 10$)	9	9	$P + 10 - N$

The two unique conditions of the residue in the hundreds and tens decades can thus easily be determined with appropriate gating (gates G-3 and G-4 in the figure). If the residue of these two decades is anything but 00 or 99, we know immediately that the pulse could not be in Region A or B and no further analysis need be performed on the residue.

For counts occurring in Region A, the residue of the units decade is in the proper BCD form. For counts occurring in Region B, the residue is actually in complementary BCD form. The residue of the units decade, and its complement, are converted from BCD to decimal form with diode matrices D-1 and D-2, respectively. This is done in order to compare the units' residue with the limits set by the window-width switch. If the residue is within the limits, gates G-1 and/or G-2 are enabled. Control gate G-5 or G-6 will be enabled by the analyzer's store in memory command if the residue of all three decades meets the criteria for pulses occurring in Region A or B. The output of the control gates initiates an add-1 or subtract-1 command to a reversible scaler.

Recall that the recording system serially processes the coincident pulses. With the appropriate routing gates and a separate set of switches (selected channel and window width) for each parameter, a single null detection unit may be used for stabilizing any number of parameters.

The correction voltage is generated in the following manner: Each parameter has its own reversible scaler that is initially preset to one-half of its capacity. Counts occurring within the window selected add or subtract counts from the contents of that parameter's scaler. A ditital-

to-analog converter produces a correction voltage proportional to the contents of the scaler. An instantaneous correction to the system gain is generated by a change in the states of the binaries in the reversible scaler. The incremental correction is normally very small (typically 0.05 channel/count). The size of incremental correction is determined by the gain setting of a low-drift dc differential amplifier.

The capacity of the reversible scaler need not be large. Although it will be dependent on the amount of incremental correction to be applied to the system, a capacity of 2^{10} (1024) should be sufficient for normal system drifts.

Figure 2 shows that we have included a readout of the binary states in the reversible scaler. The visual readout is helpful to the operator when he is setting up the experiment and also as an observation of the system's performance after long-term drift corrections have been introduced.

4. Use of a Variable-Gain Amplifier for Gain Stabilization

We have used the correction voltage to operate an electrically controlled variable-gain amplifier[5] inserted between the preamplifier and the main linear amplifier of the pulse spectrometer system.

The variable-gain amplifier was originally developed for application in semiconductor detector systems used in fission-fragment studies. The bombardment of the detector with fission fragments causes a decay of its output-pulse amplitude. Varying the detector's bias voltage is not a satisfactory method for controlling the system gain. For fission-fragment detectors the bias voltage must be selected for constant charge-collection efficiency without an abrupt increase in leakage current. It therefore becomes necessary to introduce gain stabilization at some other point in the system. This is often done at the multichannel analyzer; for example, the slope or conversion gain of the analyzer's ADC unit is varied. Gain correction at the analyzer usually requires analyzer modifications that may

not be desirable. A single multichannel analyzer that is used with subrouting pulses to store various parameters in different sections of its memory cannot have its slope or conversion gain changed because gain drifts in one parameter will affect the gain of the other parameters.

The method we use for introducing gain correction does not impose any additional restraints on the spectrometer system. In addition, the inexpensive, compact unit may be inserted into the system without making any alterations to the existing electronics. For these reasons we feel that the variable-gain amplifier is also useful for stabilizing other spectrometer systems such as those using photomultiplier tubes.

A schematic of the variable-gain amplifier is shown in Fig. 4. An analysis of this circuit appears in a separate report[5]. The gain of the amplifier is controlled by varying the emitter resistance of transistor Q_2. We use a Pinlite type 15-15 lamp (Pinlite Division of Kay Electric Co., Pine Brook, New Jersey) as the variable-resistance device. The current in the lamp, and hence its resistance, is proportional to the error signal generated by the stabilizer. Its resistance range (from 50 to 150 ohms) permits us to correct for gain variations up to ± 20%.

We originally used a G.E. 344 lamp as the control device because its resistance range produced a readily available, inexpensive control device. However, with this lamp some degradation of the resolution occurred in systems with high stabilizing count rates. This degradation was due to the timelag introduced by the long thermal time constant (on the order of 80 msec) of the G. E. 344 lamps. The thermal time constant of the Pinlite is of the order of 5 msec.

The time constant introduced by the Pinlite lamp has not presented any difficulties yet. There is, however, a system limitation resulting from this time constant. Because of this we are replacing the Pinlites with field-effect-transistors (FET). The variable-gain amplifier can operate at modulating frequencies of 100 kc when an FET is used as the gain-control element. The FET will virtually eliminate time constants from our feedback loop and thereby remove the limitation introduced by the Pinlite.

5. System Performance

A mathematical analysis of the digital stabilizer has been performed by Ladd and Kennedy and is included in their report[1]. They analyze the effect of the stabilizer action on line resolution for both the drift-free and the drifting systems. The displacement of the mean channel location of the peak is calculated for a drifting system. They have also included experimental results that were in agreement with the results predicted from their mathematical model. Since our system is similar to their model, we will not go into any mathematical analysis of the stabilizer.

We conducted various tests to determine the performance of the stabilizer. We found that we could stabilize the mean of the peak to within one-tenth of a channel without any significant degradation of the resolution. With an incremental feedback of 0.05 channel/count, a typical change in resolution is from 8.6% to 8.8% for Cs^{137}. The performance of the stabilizer is best illustrated by some results obtained in actual experiments.

Since the development of the stabilizer, the recording system has been used primarily in the study[6] of the gamma-ray spectra resulting from the spontaneous fission of Cf^{252}. The data-recording time extends over a period of from 2 to 4 weeks for a typical experiment. During this time measurements

are made of the energies of both members of pairs of fragments and of coincident gamma rays from single-fission events. A block diagram depicting the manner in which the experimental data are gathered is shown in Fig. 5. A weightless Cf^{252} fission source was used in the measurements. Solid-state detectors F-1 and F-2 measure the energies of the two fission fragments. The energy of the gamma ray is measured with a high-resolution lithium-drifted germanium detector (γ - 1). All three of the detector's outputs are processed by the recording system in the manner described previously.

The spectrum obtained from each of the fission-fragment detectors has two broad peaks representing the various fragment-energy ratios produced in the fission process. The two fission-fragment detectors are gain stabilized by monitoring the light-fragment-energy distribution. With normal gain settings this peak occurs around channel 100 in a 256-channel analyzer. A window-width of ± nine channels is used for stabilization, as the distribution of the peak is quite broad. We use an incremental feedback of 0.05 channel/count for a counting rate in the peak on the order of 10 counts/minute.

The gamma-ray spectrum obtained in prompt coincidence with fission fragments of all energies has no well-defined peaks. As a result the gamma-ray detector (γ - 1) is gain stabilized when the gamma radiation of Cm^{243} is used as a reference peak. To insure that only those counts originating from the reference source are used for stabilization, we require a coincidence of detector γ-1 with a collimated gamma dector γ-2. This reference detector is placed at an angle of 180° with respect to γ - 1. The counting rate introduced by the reference source is of the order of one count/minute. Because of the high resolution of the lithium-drifted detector we use a window width of only three channels when the reference peak is at channel 243 in a 256-channel analyzer. The incremental feedback is also correspondingly small (less than 0.02 channel/count).

Figure 6 shows a typical gamma-ray spectrum for a fission fragment mass ratio of 1.25. These data were accumulated over a period of 12 days in the manner described above. Of the several distinct peaks in this spectrum, the sharpest (the peak at 147 keV) has a resolution (FWHM) of approximately 5.6 keV. The peak at 101 keV, which is somewhat obscured due to the presence of an additional peak of smaller amplitude, has a resolution of 5.8 keV. The short-term open-loop gamma resolution of this same detector was found to be between 5.4 and 5.5 keV. It is thus apparent that there was no appreciable loss in resolution due to stabilization.

During the course of one experiment the gain of the main linear amplifier started to drift. The experiment was continued with the same amplifier and the gain was periodically adjusted to reduce the generated correction signal. By the end of the experiment the gain of the amplifier had changed by a factor of two. Throughout the experiment the resolution remained approximately the same as in previous experiments.

The ability of the stabilizer to eliminate system drifts allows the experimenter to combine results from similar experiments conducted at different times. As long as similar detectors are used, compatible results are obtained by using the same selected channel and window-width numbers for the stabilizing peak. The gain of the system, and hence the results, are duplicated by the stabilizer's holding of the reference peak at the same address location.

If the need should arise, the stabilizer can be easily expanded to include zero corrections. The same logic would be used for minotiring the position of a zero reference peak.

Acknowledgments

We are indebted to Dr. Stanley G. Thompson and Harry R. Bowman for providing us with the description and results of their experimental studies. The assistance of John A. Mendes and Helenio Arque Almaraz in the development of the stabilizer is gratefully acknowledged.

FOOTNOTES AND REFERENCES

*This work was done under the auspices of the U. S. Atomic Energy Commission.

1 J. A. Ladd and J. M. Kennedy, A Digital Spectrum Stabilizer for Pulse Analyzer Systems, Atomic Energy of Canada, Ltd., Chalk River Project Report CREL-1063, December, 1961 (unpublished).

2 R. A. Dudley and R. Scarpatetti, Stabilization of a Gamma Scintillation Spectrometer Against Zero and Gain Drifts, Nuclear Instrumentation Methods 25 (1964) 297.

3 H. de Waard, Stabilizing Scintillation Spectrometers with Counting-Rate-Difference Feedback, Nucleonics 13 (1955) 36.

4 Michiyuki Nakamura and George S. Simonof, A Multiparameter Pulse-Height Recording System, Proceedings of a Conference Held at Monterey, California, 1963 (National Academy of Sciences, Nuclear Science Series Report No. 40, 1964), pp. 287-291.

5 Helenio Arque Alamaraz, An Electrically Controlled Variable-Gain Pulse Amplifier Using Different Controlling Elements, Lawrence Radiation Laboratory Report UCRL-11481, 1964 (unpublished). (Also submitted to Nuclear Instrumentation Methods).

6 H. R. Bowman, S. G. Thompson, and J. O. Rasmussen, Gamma-Ray Spectra from Spontaneous Fission of Cf^{252}, Phys. Rev. Letters 12 (1964) 195.

FIGURE CAPTIONS

Fig. 1 Multiparameter pulse-height recording system with stabilization—simplified block diagram.

Fig. 2 Control panel used for stabilizing four parameters (dimensions).

Fig. 3 Digital stabilizer using "null detection logic".

Fig. 4 Variable-gain amplifier. All transistors 2N7060.

Fig. 5 Block diagram of detector arrangement used in study of gamma-ray spectra emitted in the spontaneous fission of Cf^{252}.

Fig. 6 Gamma-ray spectra for a fission-fragment mass ratio of 1.25.

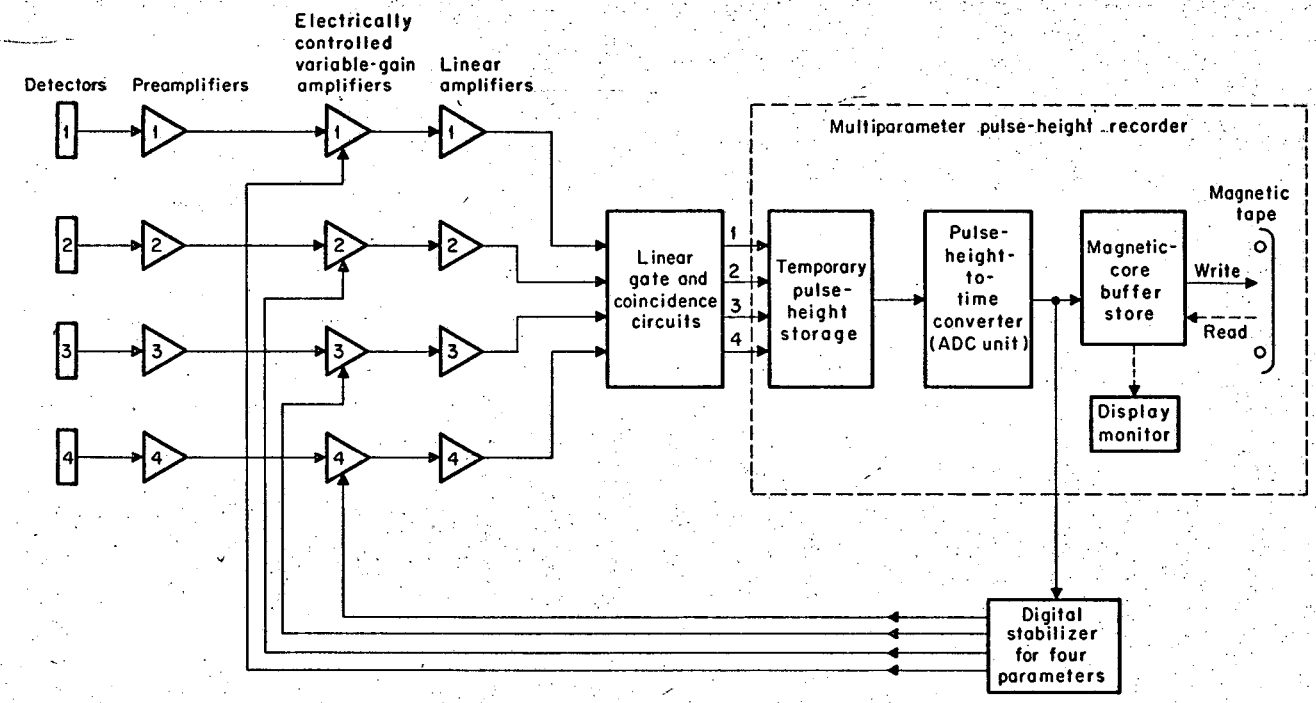
Detectors
Preamplifiers
Electrically controlled variable-gain amplifiers
Linear amplifiers
Linear gate and coincidence circuits
Multiparameter pulse-height recorder
Temporary pulse-height storage
Pulse-height-to-time converter (ADC unit)
Magnetic-core buffer store
Magnetic tape
Write
Read
Display monitor
Digital stabilizer for four parameters
MUB-3366

Fig. 1

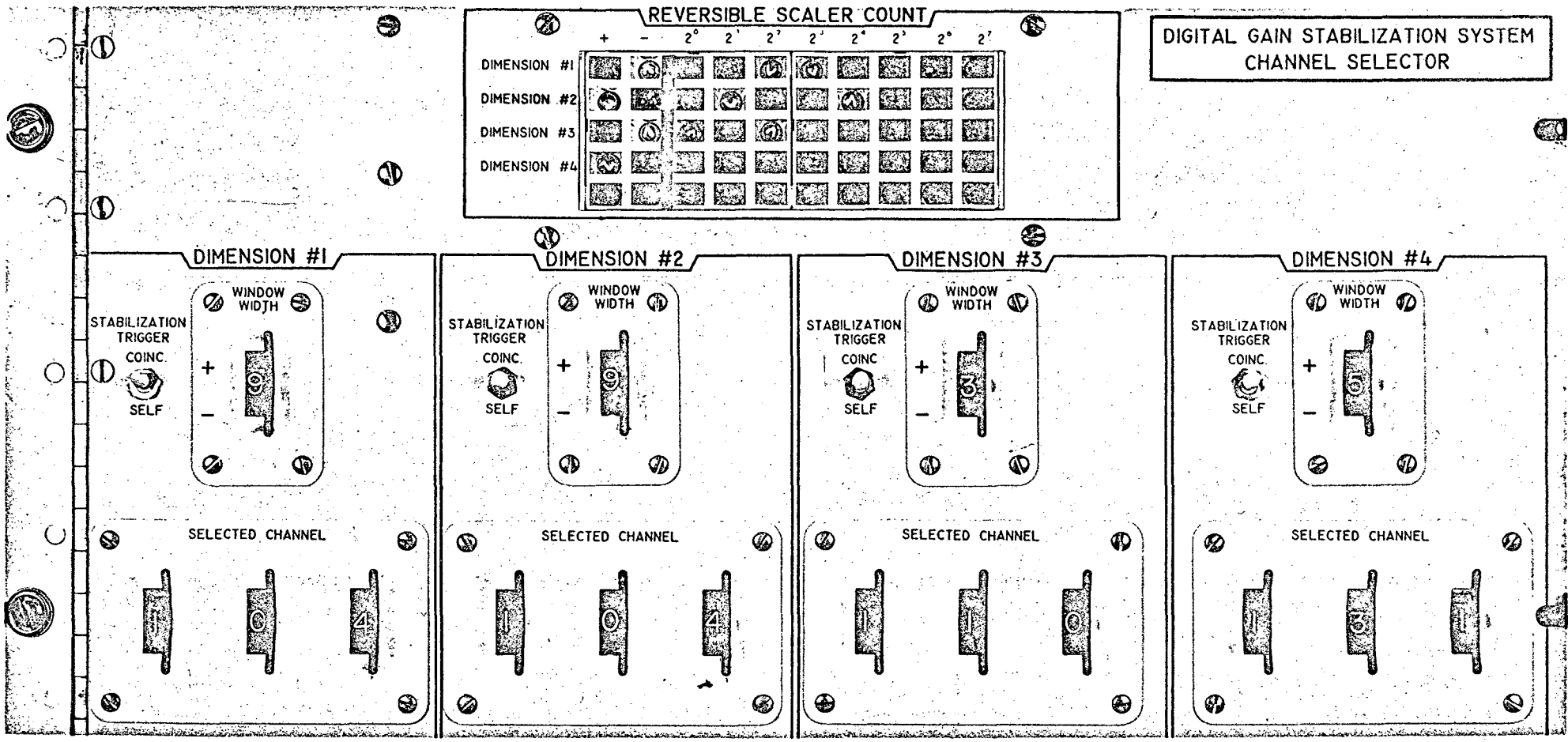
DIGITAL GAIN STABILIZATION SYSTEM
CHANNEL SELECTOR
REVERSIBLE SCALER COUNT
+
−
2⁰
2¹
2²
2³
2⁴
2⁵
2⁶
2⁷
DIMENSION #1
DIMENSION #2
DIMENSION #3
DIMENSION #4
DIMENSION #1
STABILIZATION TRIGGER
COINC.
SELF
WINDOW WIDTH
+
−
SELECTED CHANNEL
DIMENSION #2
STABILIZATION TRIGGER
COINC.
SELF
WINDOW WIDTH
+
−
SELECTED CHANNEL
DIMENSION #3
STABILIZATION TRIGGER
COINC
SELF
WINDOW WIDTH
+
−
SELECTED CHANNEL
DIMENSION #4
STABILIZATION TRIGGER
COINC.
SELF
WINDOW WIDTH
+
−
SELECTED CHANNEL

Fig. 2

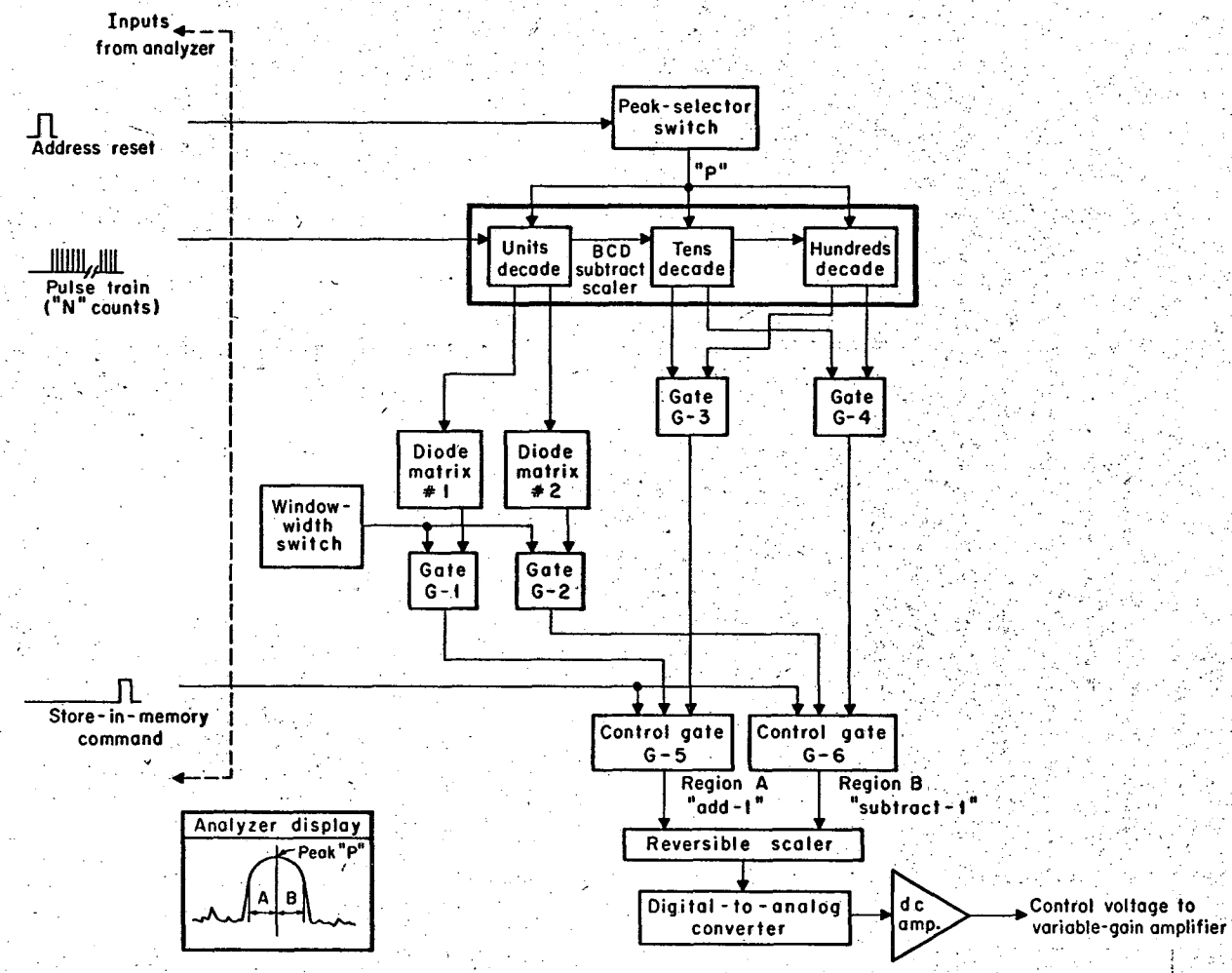

Fig. 3

MUB-3367

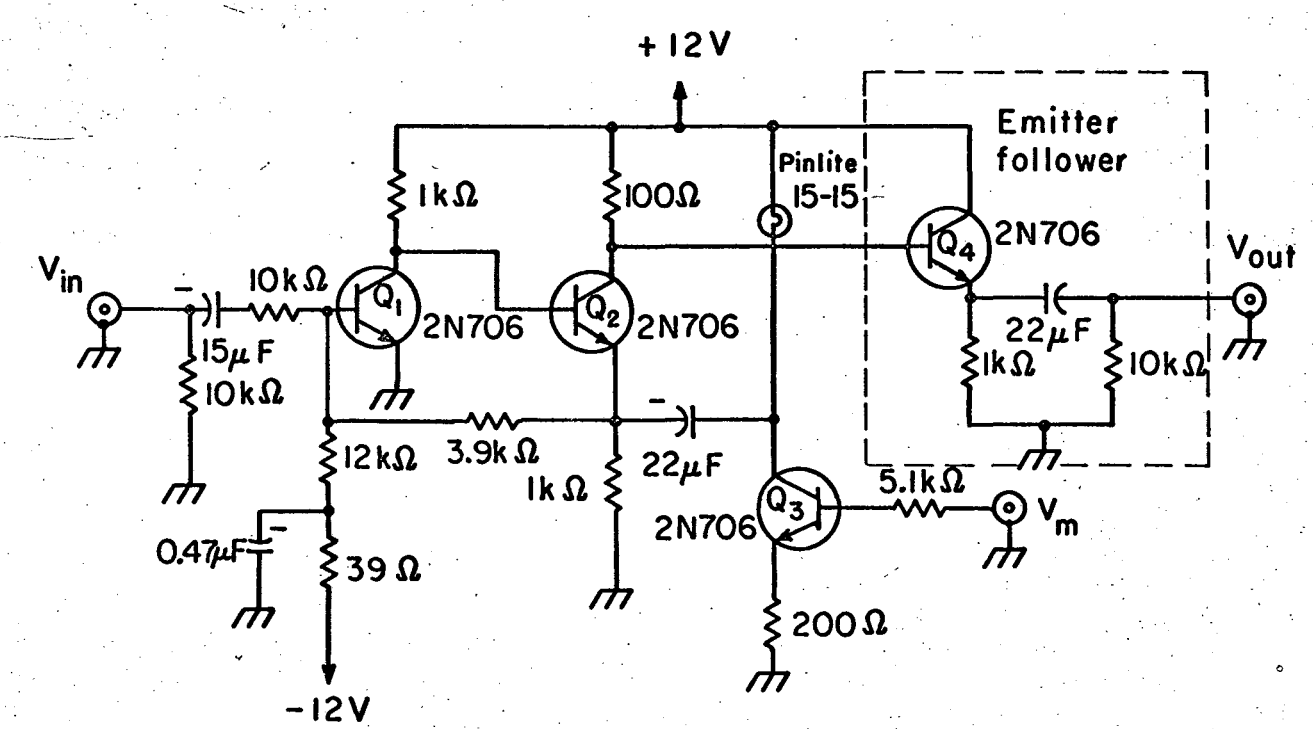

Fig. 4

MUB-3378

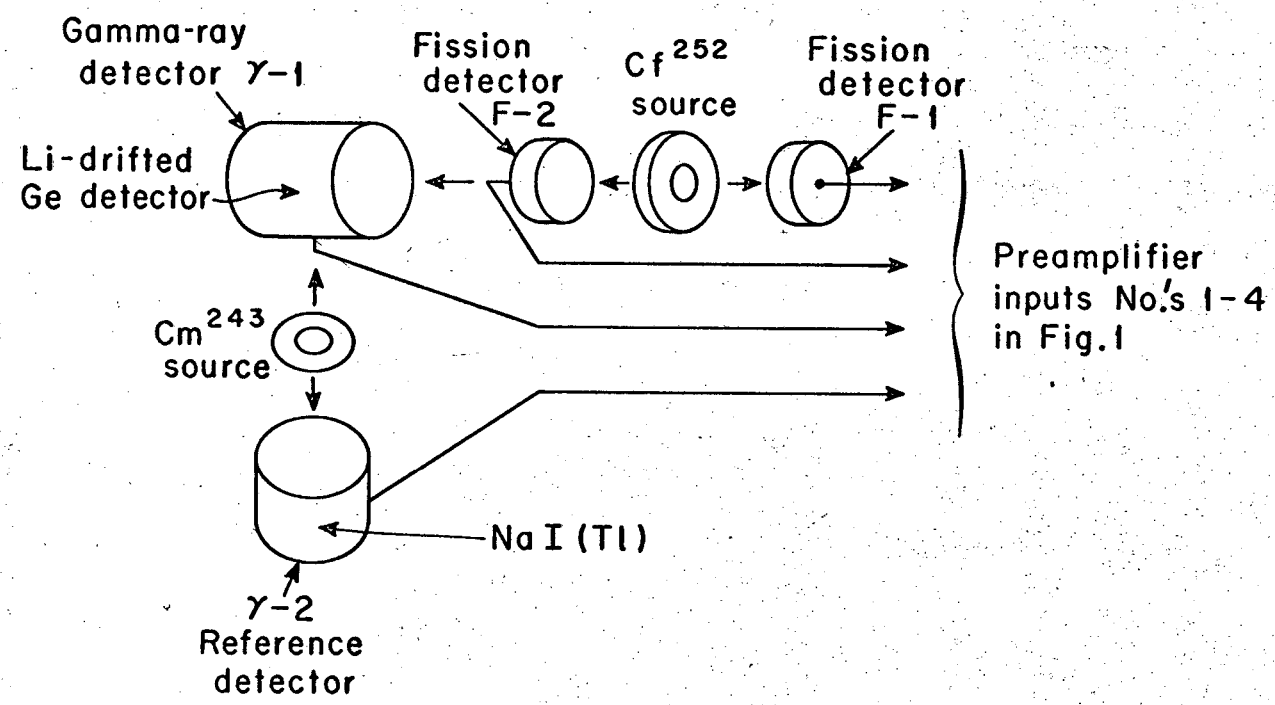

Fig. 5

MUB-3368

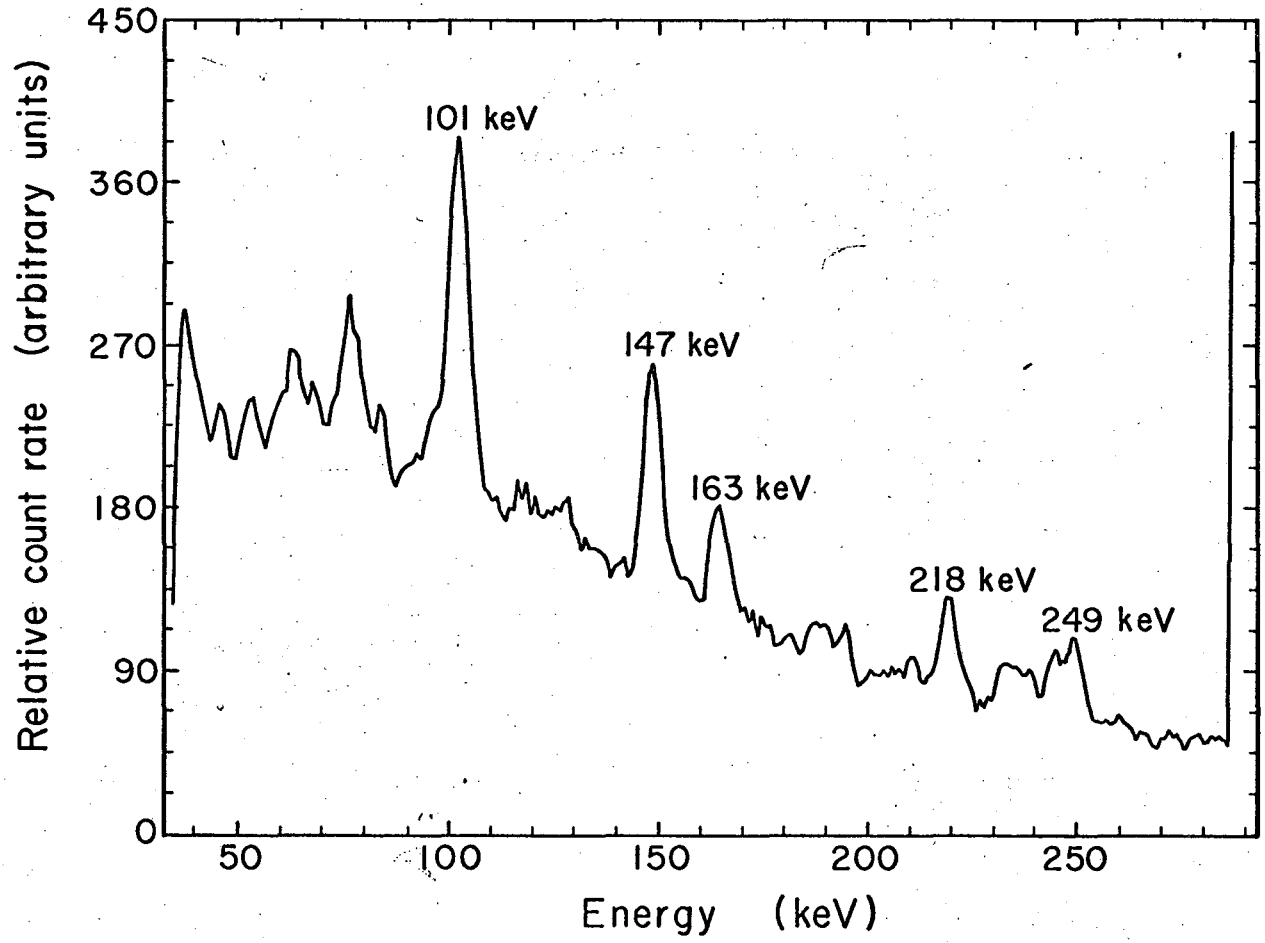

Fig. 6

MUB-3369

This report was prepared as an account of Government sponsored work. Neither the United States, nor the Commission, nor any person acting on behalf of the Commission:

A. Makes any warranty or representation, expressed or implied, with respect to the accuracy, completeness, or usefulness of the information contained in this report, or that the use of any information, apparatus, method, or process disclosed in this report may not infringe privately owned rights; or

B. Assumes any liabilities with respect to the use of, or for damages resulting from the use of any information, apparatus, method, or process disclosed in this report.

As used in the above, "person acting on behalf of the Commission" includes any employee or contractor of the Commission, or employee of such contractor, to the extent that such employee or contractor of the Commission, or employee of such contractor prepares, disseminates, or provides access to, any information pursuant to his employment or contract with the Commission, or his employment with such contractor.