UCRL-11545

# University of California

# Ernest O. Lawrence Radiation Laboratory

AN ITERATION METHOD IN THE S-MATRIX THEORY

TWO-WEEK LOAN COPY

*This is a Library Circulating Copy which may be borrowed for two weeks. For a personal retention copy, call Tech. Info. Division, Ext. 5545*

Berkeley, California

## DISCLAIMER

This document was prepared as an account of work sponsored by the United States Government. While this document is believed to contain correct information, neither the United States Government nor any agency thereof, nor the Regents of the University of California, nor any of their employees, makes any warranty, express or implied, or assumes any legal responsibility for the accuracy, completeness, or usefulness of any information, apparatus, product, or process disclosed, or represents that its use would not infringe privately owned rights. Reference herein to any specific commercial product, process, or service by its trade name, trademark, manufacturer, or otherwise, does not necessarily constitute or imply its endorsement, recommendation, or favoring by the United States Government or any agency thereof, or the Regents of the University of California. The views and opinions of authors expressed herein do not necessarily state or reflect those of the United States Government or any agency thereof or the Regents of the University of California.

Submitted to Phys. Rev. for publication.

UCRL-11545

UNIVERSITY OF CALIFORNIA
Lawrence Radiation Laboratory
Berkeley, California

AEC Contract No. 7405-eng-48

# AN ITERATION METHOD IN THE S-MATRIX THEORY

Rudolph C. Hwa

July 7, 1964

# AN ITERATION METHOD IN THE S-MATRIX THEORY

Rudolph C. Hwa

Lawrence Radiation Laboratory
University of California
Berkeley, California

July 7, 1964

## ABSTRACT

An iteration method is formulated for the determination of the partial-wave scattering amplitude on the basis of analyticity and unitarity postulates. The analytic properties in the physical and unphysical sheets are considered simultaneously in a study of the logarithmic S function $\ln S_\ell(s)$. The usual N/D approach and some of its associated drawbacks are avoided. A relationship between the total number of composite particles and the phase change of $S_\ell(s)$ along the left-hand cut is derived; this may be regarded as a generalization of Levinson's theorem. The use of this relationship in the iteration method is discussed.

# I. INTRODUCTION

So far in the development of the analytic S-matrix theory, calculations of the partial-wave scattering amplitudes have been based almost exclusively on the N/D method.[1] Its advantage lies in the fact that the nonlinear integral equation of a scattering amplitude satisfying analyticity and unitarity postulates can be reduced by this method to a set of two coupled linear integral equations. However, it is marred by the disadvantages associated inherently with the definition of a function as a quotient of two functions. Given a particular left-hand cut representing the dynamical force operating in a channel, it is not impossible that the D function has zeroes in the complex energy plane. Since causality forbids the amplitude to have poles in the complex plane of the physical sheet, this implies either that the N function must have zeroes there also or that the input force is unrealistic. In either case some remedy seems necessary, which is to be imposed so as to meet an extra condition not already contained in the postulates of analyticity and unitarity, contrary to the philosophy of the S-matrix theory. It is therefore desirable to have a method which is free of this shortcoming, that is, a method in which analyticity and unitarity automatically guarantee that all the complex poles of the amplitude are in the unphysical sheet.

Another drawback of the N/D method is that the analytic property which is to be assigned to D is not unambiguous. It can have the entire right-hand unitarity cut or just the elastic section

of this cut or the entire right-hand cut with only the elastic discontinuity. One must examine whether this freedom is consistent with the one-to-one correspondence between a pole of the scattering amplitude and a zero of $D$, which is generally assumed unless proven inadmissible a posteriori on the grounds of other consistency requirements. If $D$ is required to have only the elastic cut, then special care must be taken to ensure that the amplitude does not acquire an artificial singularity at the inelastic threshold.[2] In so doing an integral equation of the Wiener-Hopf form must be solved. It is not apparent, however, that the complications involved in solving that equation all have physical content.

Finally, we note that the $N$ and $D$ functions are associated with the scattering amplitude defined on the physical sheet only. Although it is not difficult to construct the amplitude on the unphysical sheet (reached by continuation across the elastic unitarity cut) in terms of $N$ and $D$, there is no reason to prejudice one sheet against the other, when resonances and bound states are regarded as generically the same.

We propose here a method for determining the partial-wave scattering amplitude without recourse to the factorization of the amplitude into two analytic functions, thus avoiding some of the drawbacks of the $N/D$ procedure. In our approach the physical and unphysical[3] sheets are explicitly put on the same footing. This is accomplished by utilizing the fact that the $S$ function on the unphysical sheet, $S_u$, is the inverse of $S$ on the physical sheet; thus

the function $\ln S(s)$ is singular at all the positions in the complex s plane where either $S(s)$ or $S_u(s)$ is singular. Our principal dynamical equation is a dispersion relation of this logarithmic function. It is supplemented by a number of subsidiary equations. This system of equations is then to be solved by an iteration procedure.

We shall derive a generalized form of the Levinson's theorem, which relates the phase change of $S(s)$ along the left-hand cut to the total number of composite particles--resonances and bound states--in the channel under consideration. The iteration method shows how the pole positions of these composite states move as a result of the unitarity correction, which, for potentials not too singular, never increases the number of such states. Thus, even before a calculation is attempted, one can predict on the basis of the nature of the input dynamical force whether a certain number of composite states in a particular partial wave is possible.

The movements of the poles in the complex s plane can also be studied as a function of the interaction strength or the angular momentum. The pole positions can be complex only in the unphysical sheet; any one emerging into the physical sheet through the elastic cut must stay on the real axis below the elastic threshold. An inversion of the dependence of the pole positions on angular momentum gives, of course, the Regge trajectories.

In the iteration method there are no integral equations to be solved. One simply evaluates integrals over known integrands at each

stage of the iteration. The only reservation one may have about such a procedure is that in the initial stage of the iteration the results may oscillate so much as to render the method difficult. However, such difficulty, if it exists, can easily be eliminated by proper numerical programming, which turns on the interaction adiabatically.

Section II contains the description of the iteration method for physical partial waves; the consideration needed for the extension to nonintegral values of $\ell$ is discussed in Sec. IV. In Sec. III is given a generalization of Levinson's theorem and its application.

## II. DYNAMICAL EQUATIONS

We consider the scattering of two neutral spinless particles of equal mass $\mu$. Let $s$ be the total c.m. energy squared, and the S-matrix element for a given partial wave $\ell$ be written as

$$S_\ell(s) = 1 + 2i\rho(s)\, A_\ell(s) , \tag{2.1}$$

where

$$\rho(s) = \frac{k}{s^{\frac{1}{2}}} = \left(\frac{s - 4\mu^2}{4s}\right)^{\frac{1}{2}} . \tag{2.2}$$

We assume that $A_\ell(s)$ satisfies the analyticity and unitarity postulates so that it is a meromorphic function in the cut s-plane. The branch cuts are on the real axis running from $s = -\infty$ to $0$ and from $s_1 = 4\mu^2$ to $+\infty$. If $s_2$ (assumed to be greater than $s_1$) is the inelastic threshold, then by means of the unitarity condition on $S_\ell(s)$ between $s_1$ and $s_2$ plus real analyticity--i.e., $A_\ell(s) = A^*_\ell(s^*)$--or on the basis of the discontinuity equation for the two-particle branch

cut, the scattering amplitude can be continued[4] across the elastic unitarity cut into the unphysical sheet $u$, and one obtains

$$S_u(s) = S^{-1}(s) . \tag{2.3}$$

Here and in the following the partial-wave index $\ell$ will be suppressed until Section IV, where the problem for noninteger $\ell$ will be considered.

It is clear from (2.3) that the elastic cut connects only two sheets. The zeroes of $S(s)$ correspond to the poles of $S_u(s)$. Thus the singularities of the S function on both sheets are present in the logarithmic function

$$K(s) \equiv \ln S(s) . \tag{2.4}$$

Poles of $S(s)$ and $S_u(s)$ both appear as logarithmic singularities of $K(s)$, differing only in the sign factor.

We assume in this work that $S(s)$ tends to unity as $s \to \infty$. This has been shown by Omnes to be true[5] if the asymptotic behavior is dominated by one Regge pole in the cross channel, which has the properties that its trajectory in the complex angular momentum plane satisfies the Froissart limit and that it loops back to the left of $\mathrm{Re}\,\ell = 1$ at large momentum transfer. The same result holds if a finite number of Regge poles of such character contributes to the asymptotic behavior, but it is not yet known whether the conclusion is to be altered when an infinite number of poles or a cut in the $\ell$ plane governs the asymptotic behavior. With $S(s)$ tending to unity at infinity, $K(s)$ vanishes asymptotically, and the dispersion relation for $K(s)$ which we shall consider exists without subtraction.

Let us consider first the situation in which $S(s)$ has neither zeroes nor poles; this can always be made possible by letting the interaction strength be weak enough. In this case $K(s)$ is analytic in the s-plane cut from $-\infty$ to $0$ and from $s_1$ to $+\infty$. We choose the branch of the logarithm in which $K(s)$ is pure real on the real axis between $0$ and $s_1$. Because of unitarity $K(s)$ is pure imaginary between $s_1$ and $s_2$, having opposite signs on the two sides of the real axis. Thus if $(s - s_1)^{\frac{1}{2}}$ is defined in the s-plane cut from $s_1$ to $+\infty$, then $K(s)/(s - s_1)^{\frac{1}{2}}$ is regular at $s = s_1$ and has cuts in the s plane from $-\infty$ to $0$ and from $s_2$ to $+\infty$. By Cauchy's theorem we have

$$\frac{K(s)}{(s - s_1)^{\frac{1}{2}}} = \frac{1}{2\pi i}\left[\int_{C_L} + \int_{C_R}\right] \frac{K(s')ds'}{(s' - s)(s' - s_1)^{\frac{1}{2}}}, \tag{2.5}$$

where $C_L$ and $C_R$ are contours shown in Fig. 1. Along the left-hand cut it is the imaginary part of $K$ that contributes to the discontinuity, and $\operatorname{Im} K(s)$ is just the phase of $S(s)$. In the integral over the inelastic cut[6] the contribution comes from $\operatorname{Re} K(s)$, which is $\ln \eta(s)$, where $\eta$ is the absorption coefficient defined by

$$S(s) = \eta(s)e^{2i\delta(s)}, \qquad s > s_1. \tag{2.6}$$

We thus obtain[7]

$$K(s) = \frac{(s - s_1)^{\frac{1}{2}}}{\pi}\int_{-\infty}^{0} \frac{\operatorname{Im} K(s')ds'}{(s' - s)(s' - s_1)^{\frac{1}{2}}} + \frac{(s - s_1)^{\frac{1}{2}}}{i\pi} \times \int_{s_2}^{\infty} \frac{\ln \eta(s')ds'}{(s' - s)(s' - s_1)^{\frac{1}{2}}}. \tag{2.7}$$

From (2.1) and (2.4) we have

$$\mathrm{Im}\, K(s) = \cos^{-1}\left\{ e^{-\mathrm{Re}\, K(s)}[1 - 2\rho(s)\, \mathrm{Im}\, A(s)] \right\} . \qquad (2.8)$$

In solving the present problem the inelasticity function $\eta(s)$, $s > s_2$, and the left-hand discontinuity $2i\, \mathrm{Im}\, A(s)$, $s < 0$, are the input information that is assumed known. Thus (2.7) and (2.8) constitute a closed set of equations which can be solved by successive iteration. Let $A^B(s)$ denote the Born term that gives rise to the left-hand cut and the right-hand inelastic cut, and $K^B(s) \equiv \ln(1 + 2i\rho A^B)$. Then the iteration procedure involves first putting $\mathrm{Im}\, K^B$ and $\ln \eta$ in the first and second integrals of (2.7), evaluating the two integrals, and obtaining the once-iterated $K(s)$ for any value of $s$ in the entire cut plane. The real part of this result along the negative real axis is used in (2.8) to give an improved $\mathrm{Im}\, K(s)$, and the iteration is repeated. The solution is expected to converge rapidly if the input force is weak and is such that $S(s)$ has no zeroes or poles in the cut s plane.

Consider now the situation that $S(s)$ can have zeroes or poles. We shall show in the next section how the total number of poles in the two-sheeted Riemann surface is related to the phase change of $S(s)$ along the boundary of this surface. It suffices to remark here that if when the interaction strength is initially weak $S(s)$ has no zeroes or poles, then as the interaction is strengthened, zeroes of $S(s)$ may emerge into the complex plane of the physical sheet from the left-hand cut or the right-hand inelastic cut. So long as none of these zeroes crosses

the elastic cut at $s = s_1$, no poles of $S(s)$ can enter into the complex s plane; not from infinity, since $S(s)$ is constrained to unity there at all times; not from the right-hand cut, on account of the restriction $\eta(s) < 1$; and not from the left-hand cut if the interaction strength is increased adiabatically.

To see how a zero of $S(s)$ can enter into the complex plane, let us suppose that for some weak coupling the image of the upper half contour of $C_L$ under the mapping $S = S(s)$ is as shown in Fig. 2 by the solid line. As the interaction strength is increased, the image may move to the dashed line in the same figure. If such is the case, then in the process of the change a zero of $S(s)$ moves through $C_L$ as it emerges from the left-hand cut. Notice that the phase difference of $S(s \approx 0)$ in the two cases is $2\pi$. Since a zero of $S(s)$ corresponds to a logarithmic branch point of $K(s)$, the contour $C_L$ of the Cauchy integral in (2.5) must be distorted to avoid the advancing singularity of the integrand. If we place the logarithmic branch cut of $K(s)$ along the image of the negative real axis of the $S$ plane under the inverse mapping $s = S^{-1}(S)$, the distorted contour $C_L'$ may appear as shown in Fig. 3(a); the mapping of the upper half of $C_L'$ into the S plane is then as indicated in Fig. 3(b).

Similar considerations can be made for zeroes coming out from the right-hand inelastic cut. This occurs when the coupling to other channels is strong enough that resonances in those channels induce poles in $S_u(s)$.

Consider the modification needed for the dispersion relation for $K(s)$ when the left-hand cut is such as to provide a pair of zeroes of $S(s)$ in the complex s plane. The Cauchy integral along $C_L'$ may be separated into several terms:

$$\int_{C_L'} \frac{K(s')ds'}{(s'-s)(s'-s_1)^{\frac{1}{2}}} = \int_{\sigma'}^{\sigma} \frac{\Delta K(s')ds'}{(s'-s)(s'-s_1)^{\frac{1}{2}}}$$

$$+ \left[ \int_{-\infty}^{\sigma'-\epsilon} + \int_{\sigma'+\epsilon}^{0} \right] \frac{K(s')ds'}{(s'-s)(s'-s_1)^{\frac{1}{2}}} + \cdots , \tag{2.9}$$

where the dots symbolize similar terms corresponding to integration along the lower half of $C_L'$. The limits of integration, $\sigma$ and $\sigma'$, are defined by $S(\sigma) = 0$ and $\mathrm{Im}\, S(\sigma') = 0$, $\mathrm{Re}\, S(\sigma') < 0$. The discontinuity $\Delta K$ across the complex logarithmic cut is just $2\pi i$, since $S(s)$ is assumed to have only a simple zero at $s = \sigma$. Thus the first term on the right of (2.9) gives

$$\frac{2\pi i}{(s-s_1)^{\frac{1}{2}}} \ln \frac{(\sigma - s_1)^{\frac{1}{2}} - (s-s_1)^{\frac{1}{2}}}{(\sigma - s_1)^{\frac{1}{2}} + (s-s_1)^{\frac{1}{2}}} - [\sigma \to \sigma'] . \tag{2.10}$$

The logarithm term in the square bracket cancels a similar term in (2.9) coming from integrations ending at $\sigma' - \epsilon$ and $\sigma' + \epsilon$. Hence the dispersion relation for $K(s)$ has the form[8]

$$K(s) = f(s) + \frac{(s - s_1)^{\frac{1}{2}}}{\pi} \int_{-\infty}^{0} \frac{\mathrm{Im}\, K(s')ds'}{(s' - s)(s' - s_1)^{\frac{1}{2}}}$$

$$+ \frac{(s - s_1)^{\frac{1}{2}}}{i\pi} \int_{s_2}^{\infty} \frac{\ln \eta(s')ds'}{(s' - s)(s' - s_1)^{\frac{1}{2}}}, \qquad (2.11)$$

where

$$f(s) = \sum_i \ln \frac{(\sigma_i - s_1)^{\frac{1}{2}} - (s - s_1)^{\frac{1}{2}}}{(\sigma_i - s_1)^{\frac{1}{2}} + (s - s_1)^{\frac{1}{2}}} . \qquad (2.12)$$

The summation is over the two zeroes of $S(s)$ at complex conjugate positions $\sigma_i$, and should clearly extend to all the zeroes if there are more than one pair of them. In (2.11) the function $\mathrm{Im}\, K(s')$ inside the integral over the left-hand cut is now the continuous function $\arg S(s')$ for $s'$ running from $-\infty$ to $0$ just above the real axis, and should not contain a discontinuity $2\pi i$ at $\sigma'$, which has been removed by the cancellation mentioned above. In other words we have, in deriving (2.11), moved the complex branch cuts of $K(s)$, originally between $\sigma_i$ and $\sigma'$, to positions connecting $\sigma_i$ and the threshold $s_1$, as is evidenced by the logarithm terms in (2.12).

We note that each term in (2.12) has the properties that the argument of the logarithm has a zero at $s = \sigma_i$, but that if $\sigma_i$ goes across the unitarity cut beginning at $s_1$, then the argument has a pole at $s = \sigma_i$. This is, of course, what is expected as a resonance becomes

a bound state. The companion pole in the pair originally in the complex conjugate position remains[9] in the unphysical sheet and gives rise to the virtual state. Because of symmetry in reflection across the real axis these poles must be on the real axis below $s_1$.

Since $f(s)$ depends only on the positions of the poles of the S function on the two sheets, (2.11) provides a formula ideally suited for the parameterization of the phase shift, which is $K(s)/2i$, $s \geqslant s_1$. The last integral can be evaluated, since $\eta(s')$ is determined by experiment, while the integral over the left-hand cut can be approximated by some poles.

To proceed with the formulation of the iteration method when $S(s)$ has zeroes, we note that (2.8) can be used to improve the first integrand of (2.11) at successive stages of the iteration, but we need another equation to improve also the values of $\sigma_i$, lest the iteration not converge. This equation is supplied by the dispersion relation for $S(s)$ itself. Since $\mathrm{Re}\, S(s) = 1 - 2\rho(s)\, \mathrm{Im}\, A(s)$ is a known function for $s$ real and negative, we apply the Cauchy theorem to $S(s)/s^{\frac{1}{2}}$ and obtain

$$S(s) = \frac{s^{\frac{1}{2}}}{i\pi} \int_{-\infty}^{0} \frac{\mathrm{Re}\, S(s')ds'}{(s' - s)(s')^{\frac{1}{2}}} + \frac{s^{\frac{1}{2}}}{\pi} \int_{s_1}^{\infty} \frac{\mathrm{Im}\, S(s')ds'}{(s' - s)(s')^{\frac{1}{2}}} . \tag{2.13}$$

In the second integral $\mathrm{Im}\, S(s')$ is provided by the output of (2.11) at each stage of the iteration, so (2.13) can be used to determine the values of $\sigma_i$ where $S(s)$ vanishes. The numerical procedure involves

simply the determination of the direction, at each point, in which $d|S(s)|/d|s|$ is greatest and the successive progression along the path of steepest descent toward the point where $|S(s)| = 0$. When $\sigma_i$ are found, they are then substituted in (2.12) for the next iteration. Thus Eqs. (2.11) and (2.12), supplemented by (2.8) and (2.13), form a closed system of equations from which a unique solution can be sought, provided that the interaction is such that there can be no stable particles, elementary or composite.

To eliminate this last restriction we must have a final equation to determine the positions of the poles of $S(s)$. When there are poles [i.e., when $\sigma_i$ in (2.12) moves to a different branch of $(\sigma_i - s_1)^{\frac{1}{2}}$], (2.13) must first be augmented by a term

$$\sum_i \left(\frac{s}{\sigma_i^{\,p}}\right)^{\frac{1}{2}} \frac{\lambda_i^{\,p}}{\sigma_i^{\,p} - s} \qquad (2.13')$$

on the right-hand side. The pole position and residue are determined by the zero position and the derivative there of the inverse function $S^{-1}(s)$ given by the dispersion relation

$$S^{-1}(s) = \sum_i \left(\frac{s}{\sigma_i^{\,0}}\right)^{\frac{1}{2}} \frac{\lambda_i^{\,0}}{\sigma_i^{\,0} - s} + \frac{s^{\frac{1}{2}}}{i\pi} \int_{-\infty}^{0} \frac{\mathrm{Re}\, S^{-1}(s')ds'}{(s' - s)(s')^{\frac{1}{2}}}$$

$$+ \frac{s^{\frac{1}{2}}}{\pi} \int_{s_1}^{\infty} \frac{\mathrm{Im}\, S^{-1}(s')ds'}{(s' - s)(s')^{\frac{1}{2}}}, \qquad (2.14)$$

where $\sigma_i^{\,0}$ and $\lambda_i^{\,0}$ are obtained from (2.13) plus (2.13'). For every

set of discontinuities along the right- and left-hand cuts, these two equations are iterated to give the best $\sigma_i^p$ and $\sigma_i^0$, which are used in (2.12) for the next iteration of (2.11).

The numerical work involved in this iteration procedure should not be complicated, since all integrals are straightforward evaluations. There are no difficulties regarding the possibility of any artificial singularity at $s = s_2$, and there are no integral equations to be solved. The stability of the iterated solution can be controlled by adiabatic variation of the coupling strength.

As a final remark of this section, we note that, for $\ell \geqslant 1$, (2.7) and (2.11) do not guarantee the threshold behavior $K(s) \propto (s - s_1)^{\ell+\frac{1}{2}}$ as $s \to s_1$. This can be corrected if we consider the dispersion relation for $K(s)/(s - s_1)^{\ell+\frac{1}{2}}$. The only changes that are entailed in (2.7) and (2.11) are that all the integrands should be multiplied by the factor $[(s - s_1)/(s' - s_1)]^{\ell}$ and that $f(s)$ should be replaced by the function

$$f(s) = \sum_i (s - s_1)^{\ell+\frac{1}{2}} \int^{\sigma_i} \frac{ds'}{(s' - s)(s' - s_1)^{\ell+\frac{1}{2}}} . \qquad (2.15)$$

All other considerations proceed as before without alteration.

## III. NUMBER OF COMPOSITE STATES

In the preceding section, we have anticipated the emergence of a zero of $S(s)$ into the complex plane from the left-hand cut of the physical sheet, thus changing the phase of $S(s)$ along $C_L$. We now

derive this result, which may be regarded as a generalization of Levinson's theorem.[10]

Consider the integral

$$I = \int_C \frac{S'(s)}{S(s)} ds , \tag{3.1}$$

where $S'(s)$ is the first derivative of $S(s)$ and $C$ is the contour shown in Fig. 4. If $n_0$ and $n_p$ are respectively the total number of zeroes and poles of $S(s)$ inside $C$, then we have the identity

$$I = 2\pi i \, (n_0 - n_p) . \tag{3.2}$$

Now, since $S(s)$ tends to a constant at infinity, the contribution to the integral from the integration along the infinite part of $C$ vanishes. Relating the integration around the right-hand cut to the phase shift, we thus have

$$K(s)\Big|_{C_L} + 4i[\delta(\infty) - \delta(s_1)] = 2\pi i(n_0 - n_p) , \tag{3.3}$$

where the notation $\Big|_{C_L}$ implies the difference experienced as $s$ is taken along the contour $C_L$. If there is no inelastic contribution to the unitarity cut, the usual Levinson's theorem states

$$\delta(s_1) - \delta(\infty) = (n_p - n_e)\pi , \tag{3.4}$$

where $n_p$ is the total number of stable particles [and therefore poles of $S(s)$] and $n_e$ is the number of elementary particles. Combining (3.3) and (3.4), we obtain

$$K(s)\Big|_{C_L} = 2\pi i(n_0 + n_p - 2n_e) . \tag{3.5}$$

For every pole corresponding to an elementary particle added to a dynamical system, there is generated a zero of $S(s)$ somewhere in the s plane. Hence, we see that $n_0 + n_p - 2n_e$ is the total number of poles of $S(s)$ and $S_u(s)$ corresponding to composite particles; let this number denoted by $n_c$. We thus have

$$K(s)\Big|_{C_L} = 2\pi i\, n_c . \tag{3.6}$$

The left-hand side of this equation is just the change in phase of $S(s)$ as $s$ is taken along the contour $C_L$. Since the phase difference may be different if some other path is followed, adherence to $C_L$ is to be noted explicitly. This formalizes our earlier surmise that all the "resonance," virtual, and bound-state poles are fed into the two-sheeted Riemann surface through the left-hand cut of the unphysical sheet in the case of no inelasticity.

If there is coupling to other channels through unitarity, (3.4) must be modified and (3.6) is therefore not valid in general. However, if the coupled channels do not contribute to any resonance poles in $S(s)$, as is assumed in the $\pi\pi$ problem in the strip approximation,[11] then (3.6) can of course still be used to determine the total number of composite states. We have not succeeded in generalizing (3.6) to the case in which inelastic unitarity is the source of some resonance poles, but in such a case the wisdon of restricting ones considerations to the study of a single channel is questionable.

In the remainder of this section we illustrate how $n_c$ can be estimated from an examination of the Born term $A^B(s)$, which gives rise to the left-hand cut. We have already observed from (3.6) that $n_c$ is the number of times $S$ goes around the origin, where $S$ is the image of $C_L$ under the mapping $S = S(s)$. Since $S$ is unity at $s = -\infty$, $n_c$ is therefore the number of times $S$ crosses the negative real axis with negative $d(\mathrm{Im}\, S)/ds$ minus the times it crosses with positive $d(\mathrm{Im}\, S)/ds$, where $s$ has the sense of $C_L$. In order that $S(s)$ be real along the negative real s axis, $\mathrm{Re}\, A(s)$ must vanish there. The contribution to $A(s)$ from the unitarity integral (and bound-state pole if any) for negative $s$ is always real and positive; let us postpone for the moment the discussion of its effects. What remains is just the "potential" term $A^B(s)$, which is presumed known.

Ignoring any particles exchanged in the u channel for the convenience of the present discussion, we have[12]

$$A_\ell(s) = \frac{1}{\pi} \int_{t_1}^{\infty} \frac{2dt}{s - s_1} A_t(s,t)\, Q_\ell\left(1 + \frac{2t}{s - s_1}\right), \qquad (3.7)$$

where $2i\, A_t(s,t)$ is the discontinuity of $A(s,t)$ across its $t$ cut. Consider the force arising from the exchange of a single particle of mass $m$ and spin $j$ in the t channel. Then $A_t(s,t)$ has the form

$$A_t^B(s,t) = \lambda_j\, P_j\left(1 + 2s/(m^2 - t_1)\right) \delta(t - m^2), \qquad (3.8)$$

where $\lambda_j$ is a real constant proportional to the strength of interaction, and $t_1$ is the elastic threshold of the t channel. Equation (3.8) is,

of course, incorrect in the asymptotic region of $s$, where a proper Regge formula should be used to ensure that $A_\ell(s)$ is damped out logarithmically.[5] For our purpose here we assume that in the finite part of the left-hand $s$ cut $A_\ell^B(s)$ is determined by (3.7) and (3.8), and that some damping factor is introduced in the asymptotic region to reduce $A_\ell^B(s)$ to zero. Thus except in the asymptotic region we have

$$A_\ell^B(s) = \frac{2\lambda_j P_j\left(1 + 2s/(m^2 - t_1)\right)}{\pi(s - s_1)} Q_\ell\left(1 + \frac{2m^2}{s - s_1}\right) . \tag{3.9}$$

Now, $S_\ell^B(s)$ is real along the negative real s axis if $\mathrm{Re}\, A_\ell^B(s)$ vanishes; this occurs at the zeroes of $P_j\left(1 + 2s/(m^2 - t_1)\right)$ and of $\mathrm{Re}\, Q_\ell(z)$ for $-1 < z < +1$, where $z = 1 + 2m^2/(s - s_1)$.

In view of the relationship

$$Q_\ell(-z \mp i\epsilon) = (-1)^{\ell+1} Q_\ell(z \pm i\epsilon) \tag{3.10}$$

for integral $\ell$ and $z$ in the interval $[-1, +1]$, we see that $\mathrm{Re}\, Q_\ell(z)$ is symmetric (antisymmetric) if $\ell$ is odd (even); in fact, $\mathrm{Re}\, Q_\ell(z)$ has $\ell + 1$ zeroes in this interval. Among all the zeroes the ones corresponding to $S_\ell^B(s)$ being negative satisfy the requirement $\mathrm{Im}\, A_\ell^B(s + i\epsilon) > 1/2\rho(s + i\epsilon) = 1/2|\rho(s)|$; this puts a lower bound on $|\lambda_j|$ if use is made of the property

$$\mathrm{Im}\, Q_\ell(z \pm i\epsilon) = \mp \frac{\pi}{2} P_\ell(z) , \quad z \in (-1, +1) .$$

Take, for example, the case of $j = 1$ and $m^2 > t_1 = s_1$, and consider only the p-wave amplitude. It can be established that, if

$\lambda_1 > 0$ , then the only values of $s$ on $C_L$ at which $S^B_{\ell=1}$ is real and negative are where $\mathrm{Re}\, Q_1(z \pm i\epsilon) = 0$ , i.e. $z = +0.83$ , provided that

$$\lambda_1 > \frac{s - s_1}{1 + 2s/(m^2 - t_1)} [2z|\rho(s)|]^{-1} . \tag{3.11}$$

At these values of $s$ --i.e., $(s_1 - 2m^2/0.17) \pm i\epsilon$ --the derivative $d(\mathrm{Im}\, S)/ds$ along $C_L$ is negative. Thus, if the interaction is attractive and strong enough that (3.11) is satisfied, $S_1^B(s)$ for $s \in C_L$ turns counterclockwise around the origin twice, so it has two zeroes in the cut s plane, corresponding to one resonance state. We therefore see from this kind of consideration that it is possible to attribute the existence of $\rho$ in the $\pi\pi$ system to the force arising from the exchange of $\rho$ .

If $\lambda_1$ is negative--i.e., a repulsive potential--then one can show by using (3.9) that $S_1^B$ is real and negative on $C_L$ at $s = +\epsilon$ , and at $z = -0.83 \pm i\epsilon$ --i.e. $s = (s_1 - 2m^2/1.83) \pm i\epsilon$ --provided that

$$\lambda_1 < \frac{s - s_1}{1 + 2s/(m^2 - t_1)} [-2|z\rho(s)|]^{-1} . \tag{3.12}$$

In this case $S_1^B(s)$ has three zeroes, one of which must be on the real axis.

Thus far the considerations are based only on the potential term without unitarity correction. The contribution of the unitarity integral to (3.9) for $s < 0$ is an additive quantity always real and positive, so

it generally does not introduce additional zeroes to $\mathrm{Re}\, A_\ell(s)$ , only shifts the positions of the zeroes of $\mathrm{Re}\, A_\ell^B(s)$ , thus resulting in moving the positions of the zeroes of $S_\ell(s)$ away from the original positions associated with $S_\ell^B(s) = 0$ . That no additional zeroes of $\mathrm{Re}\, A_\ell(s)$ can be introduced by the unitarity correction is true only if $\mathrm{Re}\, A_\ell^B(s)$ does not have more than one extremum between two adjacent zeroes; i.e., for $-\infty < s < 0$ , $\mathrm{Re}\, A_\ell^B(s)$ should oscillate around zero, not around some value such that two adjacent maximum and minimum values both have the same sign. This property is generally satisfied by forces due to particles exchanged in crossed channels. Hence, in these problems the number of composite states determined by a consideration of the Born term alone is the maximum number possible when the unitarity condition is fully taken into account. It is taken as understood that these statements here apply only to the problems in which the inelastic unitarity does not introduce any resonance poles.

Although the unitarity correction does not generally introduce any resonance poles, it can make some zeroes of $S_\ell^B(s)$ retreat to the left-hand cut. That occurs when the minimum requirement on the interaction strength, such as (3.11) or (3.12), is no longer satisfied, as the value of $s$ , where $\mathrm{Re}\, A_\ell(s) = 0$ , is shifted. The odd zero of $S_\ell(s)$ on the real axis, which we have encountered in the above example for $\lambda_1 < 0$ , will always remain in the interval between $s = 0$ and $s = s_1$ , so long as the interaction strength is nonzero. This is because in those cases in which an odd zero occurs, $S_\ell(+\epsilon)$ is large

and negative; since $S_\ell(s_1) = 1$, $S_\ell(s)$ must vanish on the real axis in the interval $(0,s_1)$ unless it has a pole of positive residue (a bound state) in the same interval.[13] This pole may be regarded as having moved into the physical sheet from the unphysical one. Whichever sheet it is on, it is an odd pole unaccompanied by any other.

## IV. COMPLEX ANGULAR MOMENTUM

Our interest in the analytic properties of $K_\ell(s)$, defined as $\ell n\, S_\ell(s)$, is based on the fact that in the unphysical sheet the S function is $S_\ell^{-1}(s)$, so that a pole in this sheet results in a singularity of $K_\ell(s)$. However, such a relationship between the physical and unphysical sheets has been shown to be true only for integral values of $\ell$. An invalidation of this relationship for nonintegral $\ell$ would necessitate the search for a new logarithmic function $K(\ell,s)$ which can put the physical and the first unphysical sheets on the same footing explicitly.

For the purpose of continuation in $\ell$ the partial-wave amplitude is first expressed in the form

$$A(\ell,s) = h_1(\ell,s) + (-1)^\ell h_2(\ell,s), \tag{4.1}$$

where

$$h_1(\ell,s) = \frac{1}{\pi}\int_{t_1}^{\infty} \frac{2dt'}{s - s_1} A_t(s,t')\, Q_\ell\left(1 + \frac{2t'}{s - s_1}\right), \tag{4.2}$$

$$h_2(\ell,s) = \frac{1}{\pi}\int_{u_1}^{\infty} \frac{2du'}{s - s_1} A_u(s,u')\, Q_\ell\left(1 + \frac{2u'}{s - s_1}\right). \tag{4.3}$$

The j-parity amplitude is then defined in terms of $h_1(\ell,s)$ and $h_2(\ell,s)$ as

$$F^{\pm}(\ell,s) = \frac{k}{s^{\frac{1}{2}}}[h_1(\ell,s) \pm h_2(\ell,s)] . \tag{4.4}$$

In the following we omit the signature symbol $\pm$ for the sake of convenience.

Now, the unitarity condition, when generalized to complex $\ell$, has the form[14]

$$F(\ell,s+) - F^*(\ell^*,s+) = 2i\, F(\ell,s+)\, F^*(\ell^*,s+) , \tag{4.5}$$

where $s+$ implies $s + i\epsilon$. Writing $F^*(\ell^*,s+)$ as $F^*(\ell^*,s^*-)$, we obtain from (4.5)

$$F(\ell,s+) = \frac{F^*(\ell^*,s^*-)}{1 - 2i\, F^*(\ell^*,s^*-)} . \tag{4.6}$$

Among the infinite number of sheets connected by the cut between $s_1$ and $s_2$ when $\ell$ is not an integer, let the first unphysical sheet be the one reached directly from the physical sheet by a clockwise continuation around $s_1$. Thus, by definition $F_u(\ell,s-) = F(\ell,s+)$. Continuing the right-hand side of (4.6) to the complex $s^*$ plane simultaneously as $F_u(\ell,s-)$ is continued to the complex s plane, we obtain

$$F_u(\ell,s) = \frac{F^*(\ell^*,s^*)}{1 - 2i\, F^*(\ell^*,s^*)} . \tag{4.7}$$

It has been shown by Okubo[15] that the reality of the double spectral functions implies the following reflection relationship:

$$F^*(\ell^*,s^*) = -F(\ell,s)\exp(-2\pi i\ell) . \tag{4.8}$$

We now define the generalized S function to be

$$S(\ell,s) = 1 + 2i\,F(\ell,s)e^{-2\pi i\ell} . \tag{4.9}$$

Its continuation to the first unphysical sheet satisfies the property

$$S_u(\ell,s-) = S(\ell,s+) . \tag{4.10}$$

From (4.7) and (4.8) we thus obtain

$$S_u(\ell,s) = (1 - e^{-2\pi i\ell}) + S^{-1}(\ell,s)e^{-2\pi i\ell} . \tag{4.11}$$

Clearly, when $\ell$ is an integer, we regain (2.3). When $\ell$ is not an integer, the definition of $S(\ell,s)$ has made possible the association of a pole in the unphysical sheet with a zero in $S(\ell,s)$. It therefore follows that the logarithmic function which we should be interested in is

$$K(\ell,s) = \ln S(\ell,s) . \tag{4.12}$$

To eliminate the elastic cut for nonintegral $\ell$, it is the dispersion relation for $K(\ell,s)/(s - s_1)^{\ell+\frac{1}{2}}$ which we must consider. The remarks at the end of Section II are therefore especially relevant in the use of the iteration method.

## ACKNOWLEDGMENTS

This work has benefited greatly from the many valuable criticisms and clarifying comments which Professor Geoffrey F. Chew has given; to him many thanks are due. Helpful discussions with Professor Roland Omnes, Dr. Rodney E. Kreps, and Dr. Ian T. Drummond are gratefully acknowledged. The author also wishes to thank Dr. David L. Judd for his hospitality at the Lawrence Radiation Laboratory.

This work was done under the auspices of the U. S. Atomic Energy Commission.

## FOOTNOTES AND REFERENCES

1. G. F. Chew and S. Mandelstam, Phys. Rev. 119, 467 (1960).

2. G. F. Chew, Phys. Rev. 130, 1264 (1963).

3. Here and in the following, the unphysical sheet shall always refer to the one reached by continuation across the elastic unitarity cut.

4. R. C. Hwa and D. Feldman, Ann. Phys. (N. Y.) 21, 453 (1963); for earlier work see references cited therein.

5. R. Omnes, Phys. Rev. 133, B1543 (1964).

6. Cf. M. Froissart, Nuovo Cimento 22, 191 (1961).

7. A discussion of the measures to guarantee proper threshold behavior is deferred until the end of this section.

8. Cf. C. H. Albright and W. D. McGlinn, Nuovo Cimento 25, 193 (1962); T. Ogimoto, Progr. Theoret. Phys. (Kyoto) 27, 396 (1962); A. M. Bincer and B. Sakita, Phys. Rev. 129, 1905 (1963).

9. P. V. Landshoff, Nuovo Cimento 28, 123 (1963).

10. N. Levinson, Kgl. Danske Videnskab. Selskab, Mat.-Fys. Medd. 25, No. 9 (1949); S. C. Frautschi, Regge Poles and S-Matrix Theory (W. A. Benjamin, Inc., New York, 1963).

11. G. F. Chew, Phys. Rev. 129, 2363 (1963); G. F. Chew and C. E. Jones, Phys. Rev. 135, B208 (1964).

12. M. Froissart, La Jolla Conference on the Theory of Weak and Strong Interactions, 1961 (unpublished).

13. R. Blankenbecler, M. L. Goldberger, S. W. MacDowell, and S. B. Treiman, Phys. Rev. 123, 692 (1961).

14. E. J. Squires, Nuovo Cimento 25, 242 (1962).

15. S. Okubo (University of Rochester preprint NYO-10239), to be published.

## FIGURE CAPTIONS

Fig. 1. Contours $C_L$ and $C_R$ in the s plane.

Fig. 2. Example of the images of the upper half of $C_L$ under the mapping $S = S(s)$ .

Fig. 3. Distorted contour $C_L'$ (a) and its image in the S plane (b).

Fig. 4. Contour C in the s plane.

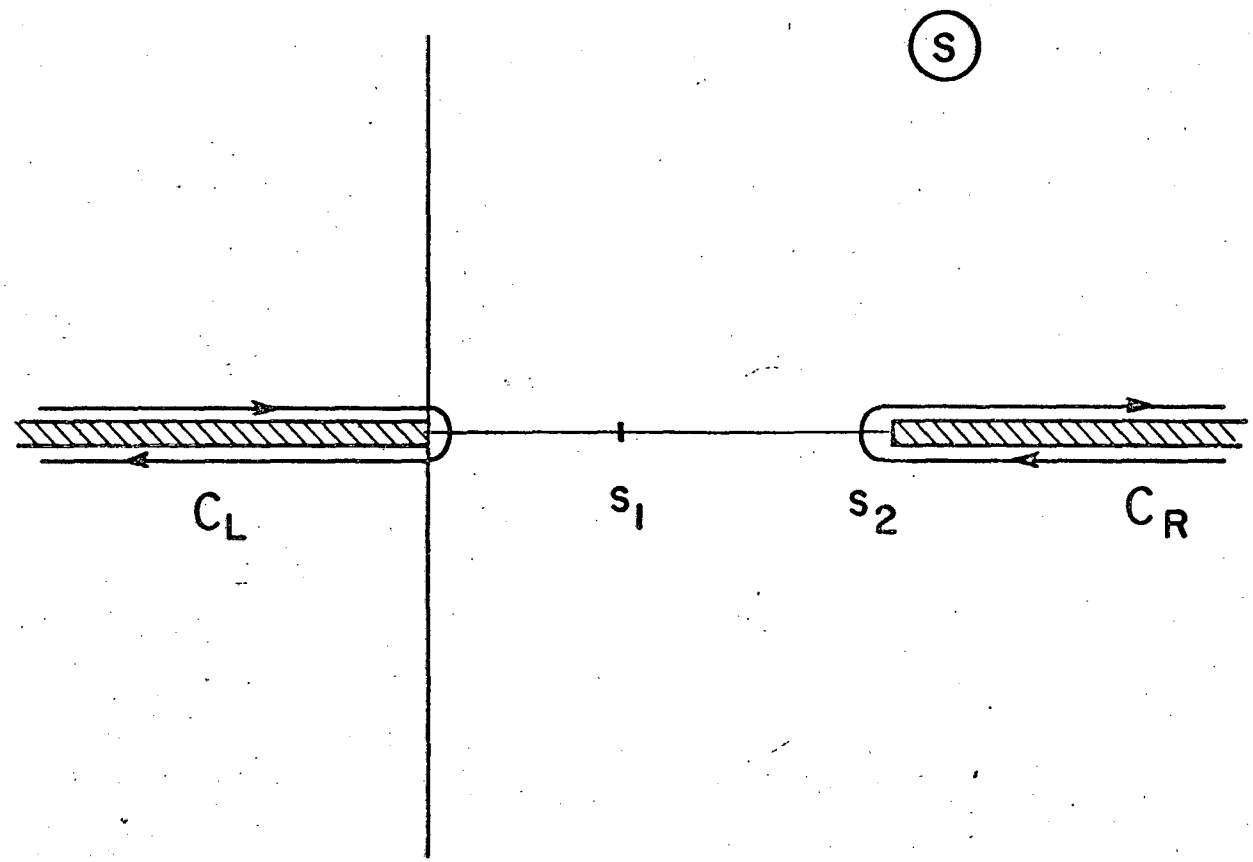


MUB-3546

Fig. 1

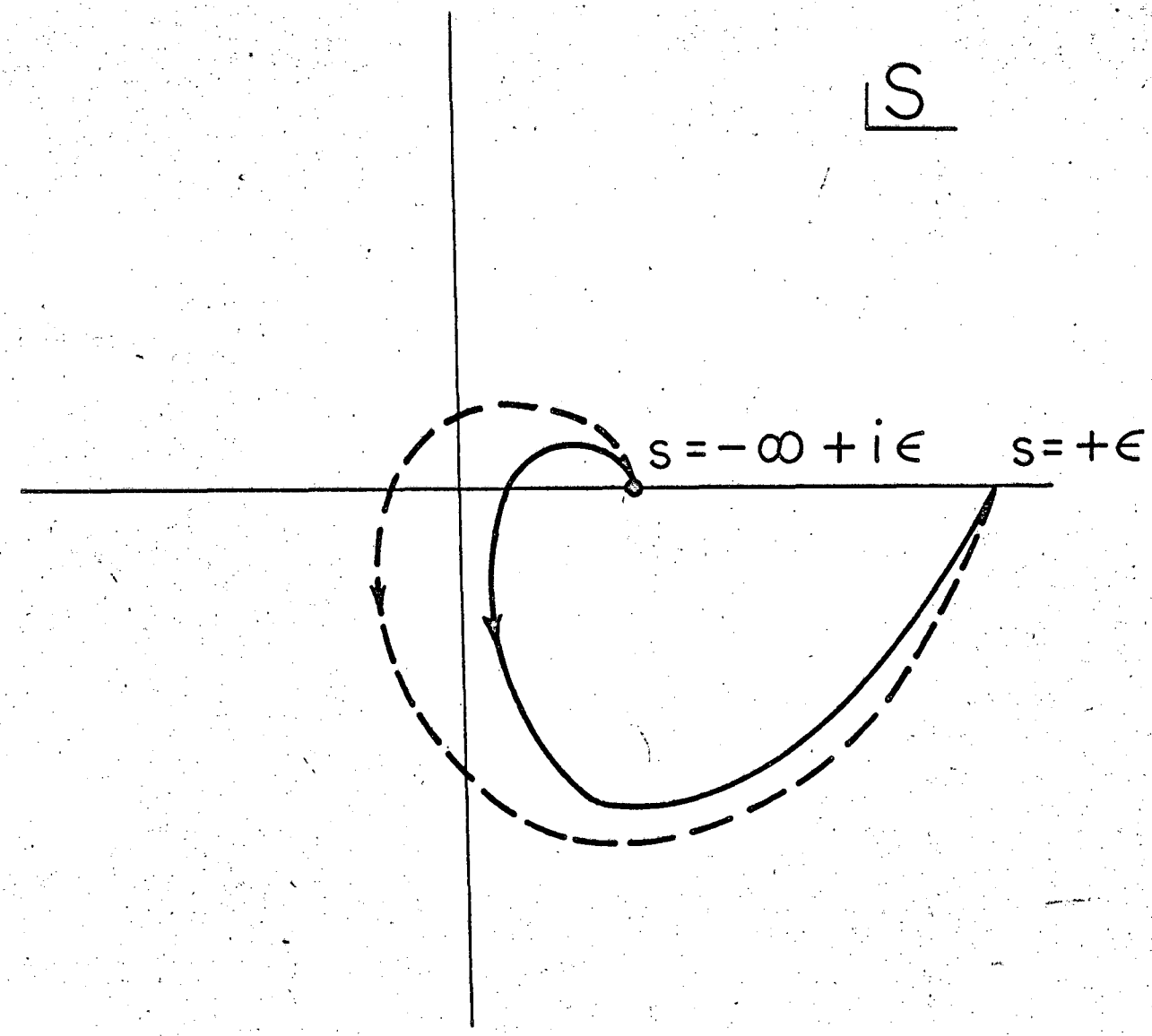


MUB-3547

Fig. 2

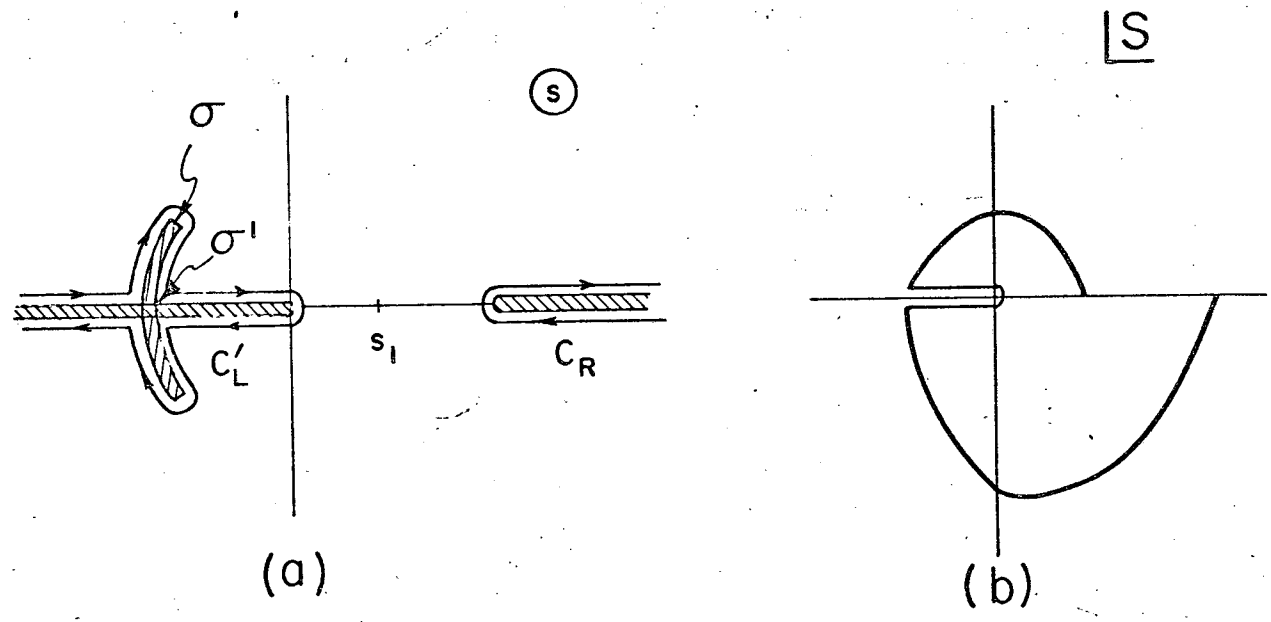


MUB-3548

Fig. 3

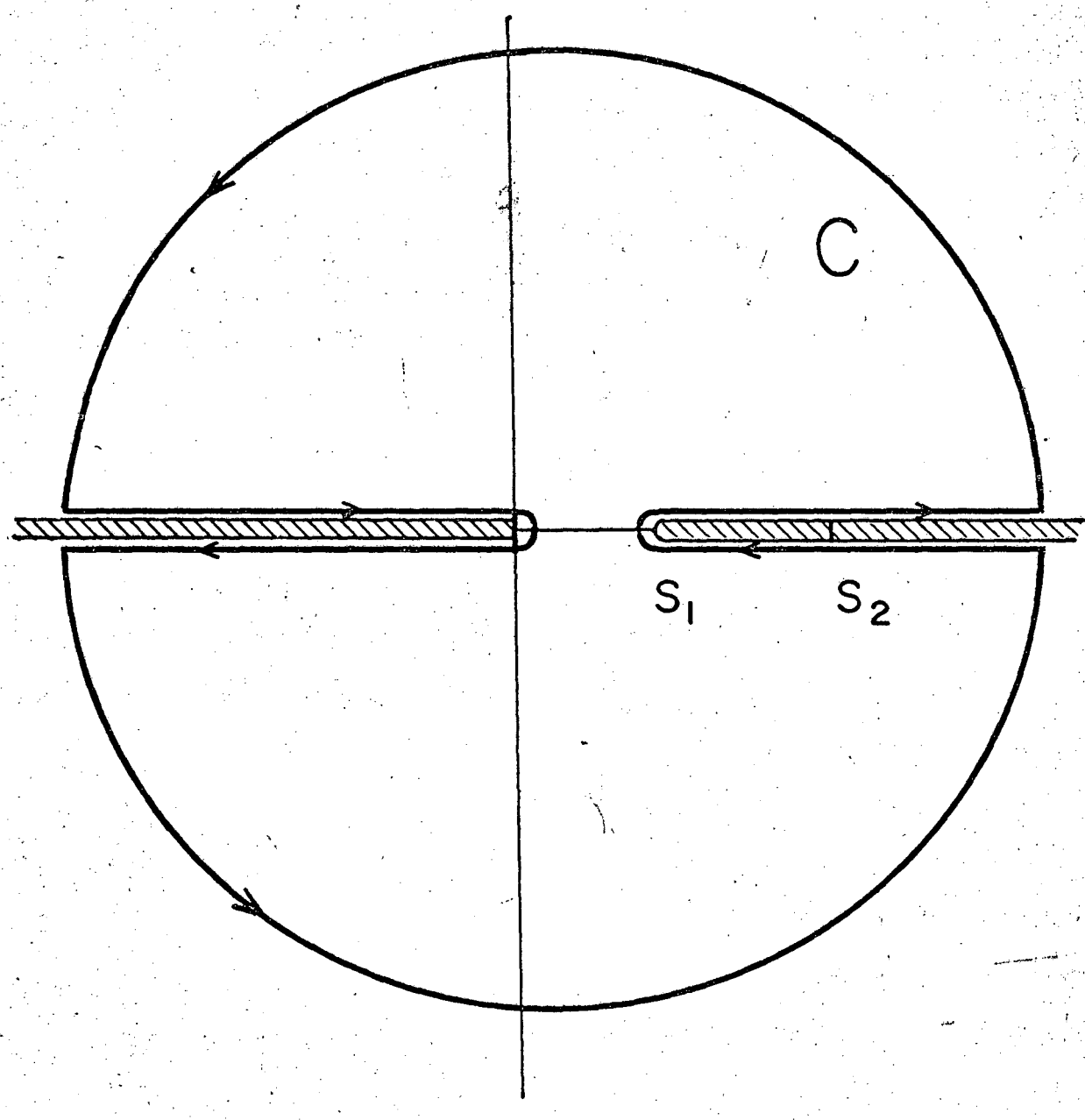


MUB-3549

Fig. 4

This report was prepared as an account of Government sponsored work. Neither the United States, nor the Commission, nor any person acting on behalf of the Commission:

A. Makes any warranty or representation, expressed or implied, with respect to the accuracy, completeness, or usefulness of the information contained in this report, or that the use of any information, apparatus, method, or process disclosed in this report may not infringe privately owned rights; or

B. Assumes any liabilities with respect to the use of, or for damages resulting from the use of any information, apparatus, method, or process disclosed in this report.

As used in the above, "person acting on behalf of the Commission" includes any employee or contractor of the Commission, or employee of such contractor, to the extent that such employee or contractor of the Commission, or employee of such contractor prepares, disseminates, or provides access to, any information pursuant to his employment or contract with the Commission, or his employment with such contractor.