UCRL-11552

University of California

Ernest O. Lawrence Radiation Laboratory

TWO-WEEK LOAN COPY

This is a Library Circulating Copy which may be borrowed for two weeks. For a personal retention copy, call Tech. Info. Division, Ext. 5545

MEASUREMENT OF THE VELOCITY OF GASES IN A FIELD OF VARIABLE COMPOSITION AND TEMPERATURE

Berkeley, California

DISCLAIMER

This document was prepared as an account of work sponsored by the United States Government. While this document is believed to contain correct information, neither the United States Government nor any agency thereof, nor the Regents of the University of California, nor any of their employees, makes any warranty, express or implied, or assumes any legal responsibility for the accuracy, completeness, or usefulness of any information, apparatus, product, or process disclosed, or represents that its use would not infringe privately owned rights. Reference herein to any specific commercial product, process, or service by its trade name, trademark, manufacturer, or otherwise, does not necessarily constitute or imply its endorsement, recommendation, or favoring by the United States Government or any agency thereof, or the Regents of the University of California. The views and opinions of authors expressed herein do not necessarily state or reflect those of the United States Government or any agency thereof or the Regents of the University of California.

Research and Development

UCRL-11552

UNIVERSITY OF CALIFORNIA

Lawrence Radiation Laboratory
Berkeley, California

AEC Contract No. W-7405-eng-48

MEASUREMENT OF THE VELOCITY OF GASES IN A FIELD OF VARIABLE COMPOSITION AND TEMPERATURE

Robert M. Davis, Darshanlal T. Wasan, and Charles R. Wilke

August 11, 1964

MEASUREMENT OF THE VELOCITY OF GASES IN A FIELD OF VARIABLE COMPOSITION AND TEMPERATURE

Contents

Abstract v

I. Introduction 1

II. Velocity Measurements in Non-Uniform Gas Streams 2

A. Hot Wire Anemometry—General Description 2

B. Development of a General Equation for the Hot Wire Anemometer 4

III. Hot Wire Anemometer—Design and Calibration 11

A. Design and Construction of Probe 11

1. Probe Specifications 11

2. Wire Mounting 14

3. Bridge Circuit 15

B. Hot Wire Anemometer Calibration 18

1. Equipment 18

2. Calibration Procedure 21

IV. Experimental Equipment for Mass and Momentum Transfer Studies 23

A. General Description 23

B. Equipment Specifications 26

1. Entrance Section 26

2. Experimental Test Section 28

3. Discharge Section 32

4. Water Circulation System 33

5. Auxiliary Equipment 33

a. Air Temperature Control 33

b. Pressure-Measuring Equipment 34

c. Equipment Supports 35

V. Experimental Procedure 36

A. Measurement of Velocity Profiles Without Vaporization . 36

B. Measurement of Velocity Profiles at Low Vaporization Conditions 37
C. Measurement of Velocity Profiles Under Moderate Vaporization Conditions 38
VI. Experimental Results and Discussion 39
VII. Conclusions 63
Acknowledgments 64
Notation 65
Appendices
A. Orifice and Hot Wire Anemometer Calibration Data 67
1. Orifice Calibration Data 67
2. Resistance Thermometer Calibration Data 69
3. Hot Wire Anemometer—Velocity Calibration Data 72
B. Experimental Results 72
C. Computer Programs—Description and Listings 96
1. Program for Resistance Thermometer Calibration 96
2. Program for Hot Wire Anemometer Velocity Calibration 96
3. Program for Processing of Velocity Profile Data . . . 97
4. Subroutines 97
5. Listings 99
D. Sample Calculations 114
1. Calculations of Temperature and Velocity 114
2. Calculation of Dimensionless Distance (y^+) and Velocity (u^+) 116
3. Calculation of Friction Factor 117
E. Engineering Drawings 118
References 123

MEASUREMENT OF THE VELOCITY OF GASES IN A FIELD OF VARIABLE COMPOSITION AND TEMPERATURE

Robert M. Davis, Darshanlal T. Wasan, and Charles R. Wilke

Lawrence Radiation Laboratory and
Department of Chemical Engineering
University of California
Berkeley, California

August 11, 1964

ABSTRACT

An experimental study is undertaken to observe the effects of mass transfer on the fully-developed turbulent velocity field in a pipe. Water is vaporized from the wetted walls of a short cylindrical section; a hot wire anemometer is used to measure the time-averaged velocity distribution (velocities ranging from 0.2 to 6 feet per second) of a gas stream with variable composition and temperature which flows through the pipe. The conventional theory for hot wire anemometry is extended to include the effects of natural and forced convection to gases having variable fluid properties. Several independent tests demonstrate that hot wire anemometry is a reliable technique for the measurement of low velocities under conditions of variable composition and temperature.

Velocity and temperature profiles are measured with and without vaporization conditions for the temperature range of 20° to 55° C and for the Reynolds number range of 9,000 to 17,000. Comparison of the velocity profiles measured with and without mass transfer indicates that the vaporization process does not appreciably alter the velocity distribution under the conditions encountered in this study.

I. INTRODUCTION

Study of the evaporation of a liquid from a wetted surface into a turbulent gas stream is essential to the understanding of the fundamental mechanisms involved in turbulent mass transfer. Several mass transfer studies have been made where the overall rates were measured and correlated[1,6] however these measurements do not give an insight into the fundamental mechanism of mass transfer in process equipment. In order to gain a more fundamental knowledge of the turbulent transport processes, simultaneous measurements of velocity and concentration profiles should be made within the transfer equipment since the two processes are closely coupled.

The effects of injection and suction on the velocity field have been studied extensively from both a theoretical and experimental standpoint for the case of a flat plate.[16,17,19,22,24,25] Similar studies have also been carried out for the case of a circular cylinder[27] and for channel flow.[32] These analyses indicate that at finite rates of injection (injection is comparable to the evaporation of a liquid into a gas stream), the velocity profile is distorted from its typical shape with no injection. It follows that if a clear picture of the mass transport processes is to be obtained, the distribution of velocity under finite mass transfer rates must be known.

In this study, water is vaporized from the wetted walls of a short cylindrical section into a fully-developed turbulent air stream. A hot wire anemometer is used to measure the time-averaged velocity distribution (velocities ranging from 0.2 to 6 feet per second) of the gas stream of variable composition and temperature which flows through the pipe. The conventional theory of hot wire anemometry as proposed by King[12] is extended to include the effects of natural and forced convection to gases having variable fluid properties. Velocity and temperature profiles are measured with and without vaporization conditions for the temperature range of 20° to 55° C and for Reynolds numbers ranging from 9,000 to 17,000.

II. VELOCITY MEASUREMENTS IN NON-UNIFORM GAS STREAMS

Velocities of gaseous streams are commonly measured with either a pitot tube or a hot wire anemometer. A literature survey was first carried out to determine the most suitable instrument for measurement of velocities in a gas stream of variable composition and temperature in the anticipated range of Reynolds number of 5,000 to 20,000. This range corresponds to velocities between 0.1 and 7.0 ft/sec. The review paper of Folsom[5] was a useful guide for the pitot tube evaluation. It was found that for the above-mentioned flow range, a pitot tube would require a pressure-sensing device capable of measuring differential pressures as low as 0.004 microns. Furthermore, as many readings must be made within a short period of time, the pressure sensing instrument must respond quickly to pressure changes. A differential pressure gauge with these specifications is not readily available, and as a result, it was determined that for the flow range indicated above, hot wire anemometry would be the most suitable means of measuring the velocity of a gas stream of variable composition and temperature.

A. Hot Wire Anemometry—General Description

The hot wire anemometer is a velocity-measuring instrument which consists of a fine electrically-heated wire, 0.5 to 15 microns in diameter, stretched across the ends of two prongs. When the heated wire is exposed to a gas stream, the wire will lose heat by convection. Consequently, the wire temperature (and thus its electrical resistance) or the electrical current in the wire varies with the velocity of the gas stream in a manner which may be determined by calibrated tests. It follows that the instrument can be used in either of two ways. In the first method, the wire is heated by a constant current, and the velocity is determined by measurement of the electrical resistance of the wire. In the second method, the wire is maintained at a constant temperature and the velocity is determined from the measurement of the current

flowing through the wire. Either of these two methods may be used, but the latter is preferred for this application as the sensitivity of the instrument will be equally high throughout the velocity range to be encountered.

An additional function of the hot wire anemometer is that of a resistance thermometer. A small amount of current is passed through the wire so that its resistance may be measured with a bridge circuit. Since the resistance of most metals is a linear function of temperature within a 300° C range (see Fig. 28, Appendix A), the wire may be easily calibrated by the measurement of its resistance at several known temperatures.

Hot wire anemometry as a technique for the measurement of velocities was first proposed by Kennelly[11] in 1909. In 1912, King, in his classic papers[12,13] showed theoretically that if a gas stream with constant fluid properties is passed over a heated horizontal wire, the current, I flowing through the wire may be related to the stream velocity, u by

$$\frac{I^2 R_w}{t_w - t_a} = \frac{I^2 R_w}{\Delta t} = a + b\sqrt{u} \qquad (1)$$

where R_w is the wire resistance, Δt is the difference between the wire and fluid temperature, and a and b are equation constants whose value depends upon the fluid properties and the wire dimensions.

In the past several years, the hot wire anemometer has become a powerful tool in measuring time-averaged and fluctuating velocities. The review paper of Willis,[31] and Hinze's recent book on turbulence[8] give an excellent treatment of this aspect of hot wire anemometry.

Although much has been written about the theoretical aspects of hot wire anemometry, very little information is available regarding the design, construction and operation of a hot wire anemometer itself. Papers of Lowell[15] and Spangenburg[23] treat these features somewhat in detail and were found to be invaluable in the design of the probe used in this study.

In the past, at subsonic flow rates, the hot wire anemometer has been used to measure velocities in a field of constant composition and temperature. For this case, King's equation (Eq. (1)) has been used to evaluate the gas velocity. However, in a study such as the one at hand, where velocity measurements are to be made in a field of variable composition and temperature, it is essential that the effect on the current-velocity relationship caused by a change in fluid properties be accounted for.[2,3]

From King's equation (Eq. (1)) it is evident that if a plot of heat dissipation as given by $(I^2R_w/\Delta t)$ versus $\sqrt{u}$ is made, then the constants a and b can be determined from the intercept and slope of the straight line that fit best to the data from calibrated tests with known velocities. It has been found experimentally that in the case of pure forced convection at Reynolds numbers* greater than 5.0, the relationship as given by Eq. (1) can be represented by a linear function.[8] However, Van der Hegge Zijnen's experimental observations[28] clearly show that the effect of natural convection becomes important at low velocities. As a result, it is desireable to develop a general equation for hot wire anemometry which will include the low velocity range, and which will also account for the change in properties resulting from the change in composition and temperature. This general development is attempted in the following section.

B. Development of a General Equation for the Hot Wire Anemometer

Consider the hot wire anemometer as a horizontal cylinder of infinite length which gives off heat to its surroundings by forced and natural convection as well as by radiation.

---

*For the case at hand (wire diameter ≈ 0.00025 in., $\Delta t = 250^\circ$ C) this corresponds to a minimum velocity of 0.8 ft/sec.

The mechanism of heat transfer from a horizontal cylinder by natural or by forced convection has been studied extensively. An excellent review of these modes of heat transfer is given by McAdams.[18] Van der Hegge Zijnen[28] has collected the heat transfer data for a wide range of systems studied by several experimentors, and has correlated these data successfully as follows. For natural convection from a horizontal cylinder for the range of product of Grashof (Gr) and Prandtl (Pr) numbers of 10^{-5} to 10^{9}, the Nusselt (Nu) number is given by

$$Nu_n = 0.38(Pr)_f^{0.2} + 0.25\,[(Gr)_f(Pr)_f]^{1/8} + 0.45\,[(Gr)_f(Pr)_f]^{1/4} \quad (2)$$

For forced convection from a horizontal cylinder, for the Reynolds (Re) number range of 10^{-2} to 10^{6}, the Nusselt number is given by

$$Nu_{fo} = 0.38(Pr)_f^{0.2} + [0.56(Re)_f^{1/2} + 0.001(Re)_f]\,(Pr)_f^{1/3} \quad (3a)$$

According to Van der Hegge Zijnen, the term containing the Reynolds number to the first power in Eq. (3a) may be neglected at low velocities, thus we obtain

$$Nu_{fo} = 0.38(Pr)_f^{0.2} + 0.56(Re)_f^{1/2}\,(Pr)_f^{1/3} \quad (3b)$$

When a fluid stream flows over a heated cylinder at low velocities, heat is transferred from the wire to the gas by natural as well as by forced convection. The nature of the combination of these two modes of heat transfer is not well understood. The only study of this problem is reported by Van der Hegge Zijnen[28] who has successfully correlated data for air by assuming that the forced and natural convection modes of heat transfer may be represented by horizontal and vertical vectors respectively. The total amount of heat transferred by the cylinder may therefore be expressed by the resultant of the two vectors. Although Van der Hegge Zijnen only verified the validity of this assumption for air, there is

no reason why this assumption should not hold for other systems. By using the assumption of vectorial additivity, Eqs. (2) and (3b) may be combined as follows,

$$\{Nu_t - 0.38(Pr)_f^{0.20}\}^2 = \{0.25[(Gr)_f(Pr)_f]^{1/8}$$

$$+ 0.45[(Gr)_f(Pr)_f]^{1/4}\}^2 + \{0.56(Re)_f^{1/2}\ (Pr)_f^{1/3}\}^2 \qquad (4)$$

Rearranging terms in the above equation, we get

$$Nu_t = 0.38(Pr)_f^{0.2} + \sqrt{\alpha^2 + \beta^2 u} \qquad (5)$$

where $$\alpha = 0.25[(Gr)_f(Pr)_f]^{1/8} + 0.45[(Gr)_f(Pr)_f]^{1/4} \qquad (6)$$

and $$\beta = 0.56\ (D\rho_f/\mu_f)^{1/2}\ (Pr)_f^{1/3} \qquad (7)$$

If we make the usual assumptions[8,12,15,23] that the wire heat losses are all to the fluid stream, that the wire is heated to a uniform temperature, and that the heat given off by the wire does not affect the fluid properties of the ambient stream, then we may equate the heat dissipation of the wire to the heat transferred to the gas stream as

$$I^2R_w = \epsilon h_t A\Delta t \qquad (8)$$

where h_t is the total heat transfer coefficient which represents natural and forced convection as well as radiation from the wire, A is the surface area of the wire available for heat transfer, and ϵ is an energy conversion factor.

Substituting relation (5) into relation (8) we have

$$\frac{I^2R_w}{\epsilon A\Delta t} = h_t = h_r + \left(\frac{k_f}{D}\right)[0.38(Pr)_f^{0.2} + \sqrt{\alpha^2 + \beta^2 u}] \qquad (9)$$

Hinze[8] has shown that if the wire diameter is less than 15 microns, and if the wire temperature does not exceed 300° C (as will be the case in this study), the heat transfer coefficient for radiation, h_r which appears in Eq. (9) may be neglected.

In order to solve Eq. (9) for velocity in terms of quantities which can either be measured or estimated, the following algebraic rearrangements are necessary.

Multiplying Eq. (9) by itself we find

$$\left(\frac{I^2R_w}{\epsilon A\Delta t}\right)^2 - 0.76\left(\frac{I^2R_w}{\epsilon A\Delta t}\right)\left(\frac{k_f}{D}\right)(Pr)_f^{0.2} + \left[0.38\left(\frac{k_f}{D}\right)(Pr)_f^{0.2}\right]^2$$

$$= \left(\frac{k_f^2}{D^2}\right)(\alpha^2 + \beta^2 u) \tag{10}$$

Now the velocity can be expressed explicitly as

$$u = \frac{D^2}{k_f^2\beta^2}\left(\left(\frac{I^2R_w}{\epsilon A\Delta t}\right)^2 - 0.76\left(\frac{I^2R_w}{\epsilon A\Delta t}\right)\left(\frac{k_f}{D}\right)(Pr)_f^{0.2}\right.$$

$$\left. + \left[0.38\left(\frac{k_f}{D}\right)(Pr)_f^{0.2}\right]^2 - \left(\frac{k_f}{D}\right)^2\alpha^2\right) \tag{11}$$

If we then replace values of α and β from Eqs. (6) and (7) into Eq. (11), we get

$$u = \frac{D^2}{\epsilon^2A^2k_f^2[0.56\left(\frac{D\rho_f}{\mu_f}\right)^{1/2}(Pr)_f^{1/3}]^2}\left(\left(\frac{I^2R_w}{\Delta t}\right)^2\right.$$

$$- 0.76\epsilon A\left(\frac{k_f}{D}\right)\left(\frac{I^2R_w}{\Delta t}\right)(Pr)_f^{0.2} + \left\{0.38\epsilon A\left(\frac{k_f}{D}\right)(Pr)_f^{0.2}\right\}^2$$

$$\left. - \epsilon^2A^2\left(\frac{k_f}{D}\right)^2\left\{0.25\left[(Gr)_f(Pr)_f\right]^{1/8} + 0.45\left[(Gr)_f(Pr)_f\right]^{1/4}\right\}^2\right) \tag{12}$$

Eq. (12) may be rewritten in terms of two constants, K_1 and K_2 as

$$u = \frac{\left(\frac{I^2R_w}{\Delta t}\right)^2 - 0.76\, k_f\left(\frac{I^2R_w}{\Delta t}\right)(Pr)_f^{0.2}\, K_1}{\left[\rho_f(C_p)_f^{2/3}\, k_f^{4/3}/\mu_f^{1/3}\right]K_2} + \frac{k_f^2\left(\left\{0.38(Pr)_f^{0.2}\right\}^2 - \left\{0.25\left[(Gr)_f(Pr)_f\right]^{1/8} + 0.45\left[(Gr)_f(Pr)_f\right]^{1/4}\right\}^2\right)K_1^2}{\left[\rho_f(C_p)_f^{2/3}\, k_f^{4/3}/\mu_f^{1/3}\right]K_2} \tag{13}$$

where the values of the constants can be calculated from the following relationships

$$K_1 = (\epsilon A)/D = \epsilon\pi L \tag{14}$$

and

$$K_2 = (0.56\epsilon A)^2/D = (0.56\epsilon\pi L)^2 D \tag{15}$$

Examination of Eq. (13) reveals that the velocity of a gas may be calculated from measured values of the wire resistance, current, temperature, values of the fluid properties evaluated at the mean film temperature and from the known values of the constants K_1 and K_2. It is to be noted that these constants are functions of length and diameter of the wire alone. Since precise measurements of the parameters is difficult, equation constants are generally determined by calibrated tests in a known velocity field.[8,12,15,23] Furthermore, it should be pointed out that the values of K_1 and K_2 determined by calibration in one gas may be used to calculate velocities measured in another gas, since the only variables involved in these constants are length and diameter.

A series of three digital computer (IBM 7094) programs are written to compute the equation constants from calibration data and also velocities from data measured in experimental runs. A block diagram representing each of these programs is shown in Fig 1. The data processing proceeds as follows.

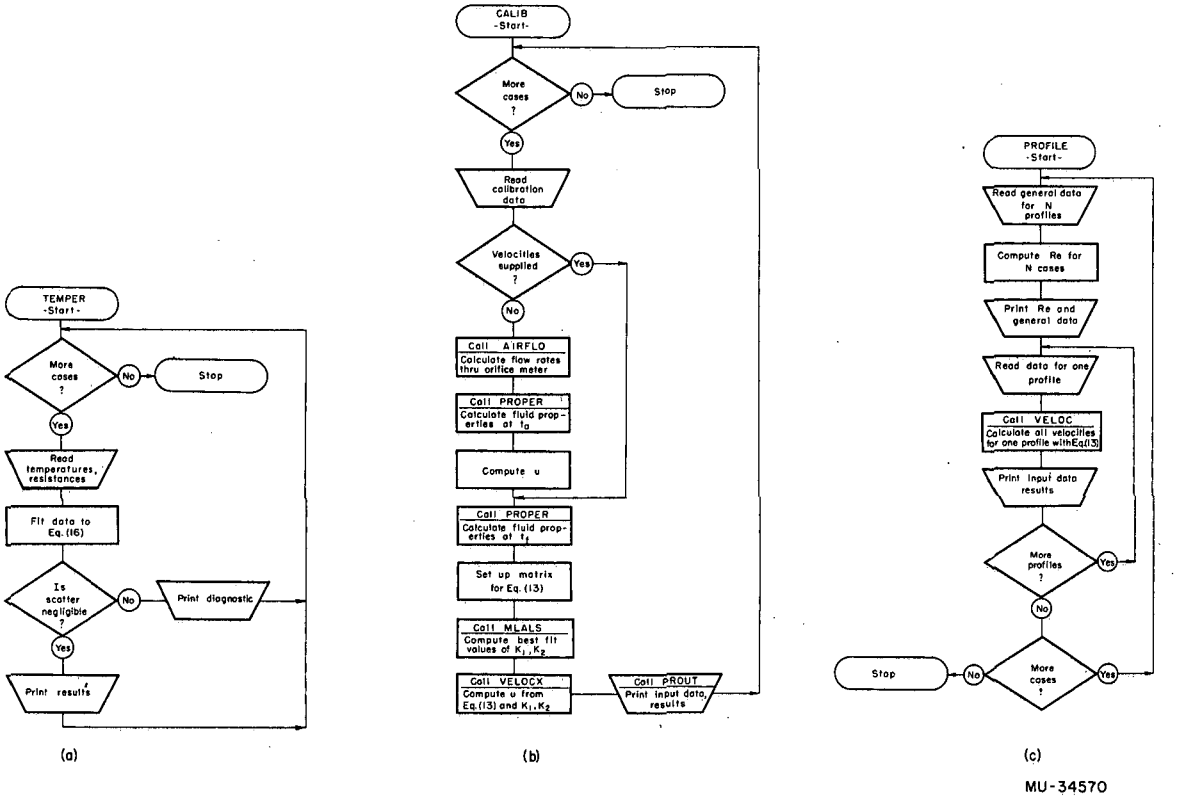

Fig. 1. Block diagrams for three digital computer programs. (a) Hot wire anemometer temperature calibration. (b) Hot wire anemometer velocity calibration. (c) Velocity profile data processing.

1. A least squares routine is used to fit the temperature calibration data to an equation of the form

$$t = mR + c \tag{16}$$

where m and c are constants for any given wire maintained within a temperature range of 300° C.

2. Values of the constants K_1 and K_2 which appear in Eq. (13) are then determined from velocity calibration data taken in a fluid stream of known composition, temperature and velocity. Fluid properties for the air-water system such as specific heat, thermal conductivity and viscosity used in the calculations are taken from the values tabulated by Hov.[10] Best fit of calibration data to Eq. (13) is determined by a least squares program which uses Gauss' iterative method.

3. Using the constants as determined in steps (1) and (2) in conjunction with Eq. (13), velocity distributions are then computed.

For further details, the reader is referred to program listings found in Appendix C.

III. HOT WIRE ANEMOMETER—DESIGN AND CALIBRATION

A. Design and Construction of Probe

1. Probe Specifications

A hot wire anemometer was designed and constructed so that it might be used to measure velocities in the mass transfer equipment. The probe consists of two sections of stainless steel tubing, 3/8- and 3/16-in. o.d. as shown in Fig. 2. The probe is held by a traversing mechanism to be described below. A drawing of the lower half of the probe is shown in Fig. 3A. It is fabricated of a 23-in. long, 3/8-in. o.d. steel tube with a wall thickness of 0.125 in. A male "Sub-Minax" connector is bolted to the top of the tubing. Two pairs of Teflon-coated wires lead from the connector through the tube and are soldered to four terminals of a 5-prong plug attached to the bottom of the probe. The upper section (see Fig. 3 B) is fabricated from 3/16-in. o.d. stainless steel tubing (0.018-in. wall thickness). The upper end is bent at an 80° angle so that the wire will be upstream of the main body of the probe, and thus will not sense any distortion caused by the tube.

The probe tip consists of two stainless steel supports cemented to a Bakelite base with Epoxy Resin. The supports are so tapered that the diameter varies from 0.27-in. at the base to 0.015 in. at the tip. Both supports extend 5/8 in. from the surface of the Bakelite housing, and are separated by a distance of 0.125 in. at the base. A 0.00025-in. diameter platinum wire is soldered to the tips of the two prongs. The upper half of the probe is joined to the lower half by a female "Sub-Minax" connector which is cemented to a 1-in. long, 3/16-in. i.d., 1/4-in. o.d. stainless steel collar which in turn fits over the 3/16-in. tubing at its base. Two Teflon-coated wires lead from the two wire supports to the connector at the bottom of this section of the probe.

The hot wire anemometer may be moved through the test section by the traversing mechanism shown in Fig. 2. An engineering drawing of the traversing mechanism is shown in Fig. 30 (Appendix E). The gear mechanism

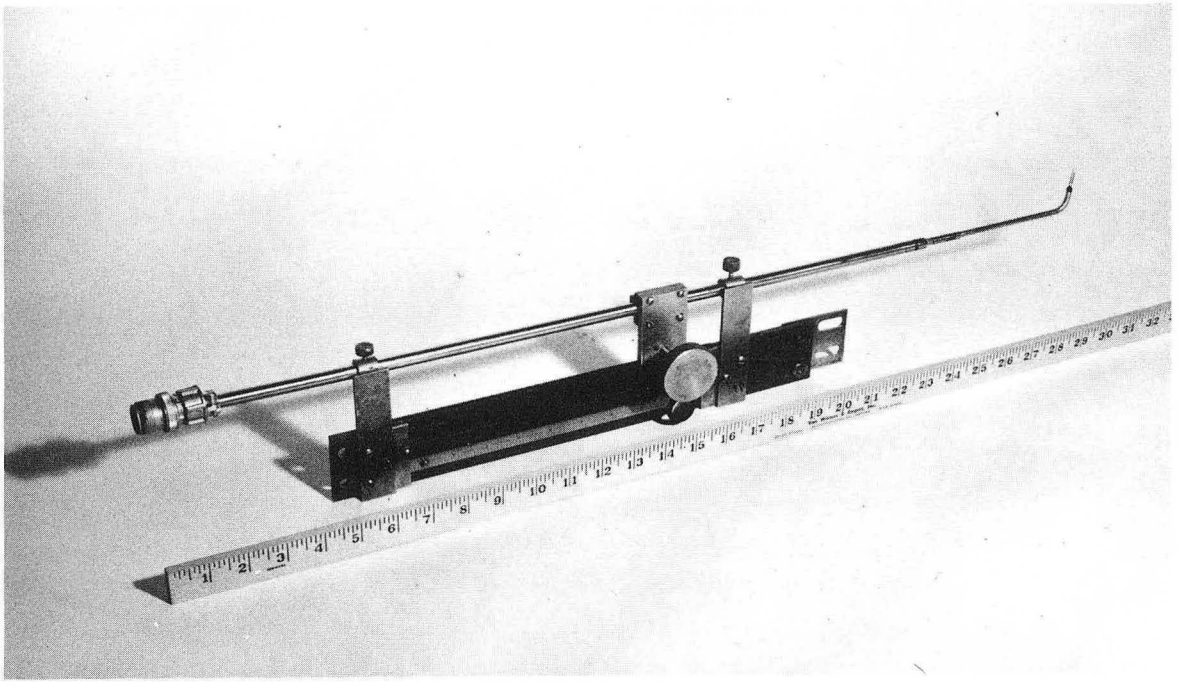

ZN-4386

Fig. 2. Hot wire anemometer probe and traversing mechanism.

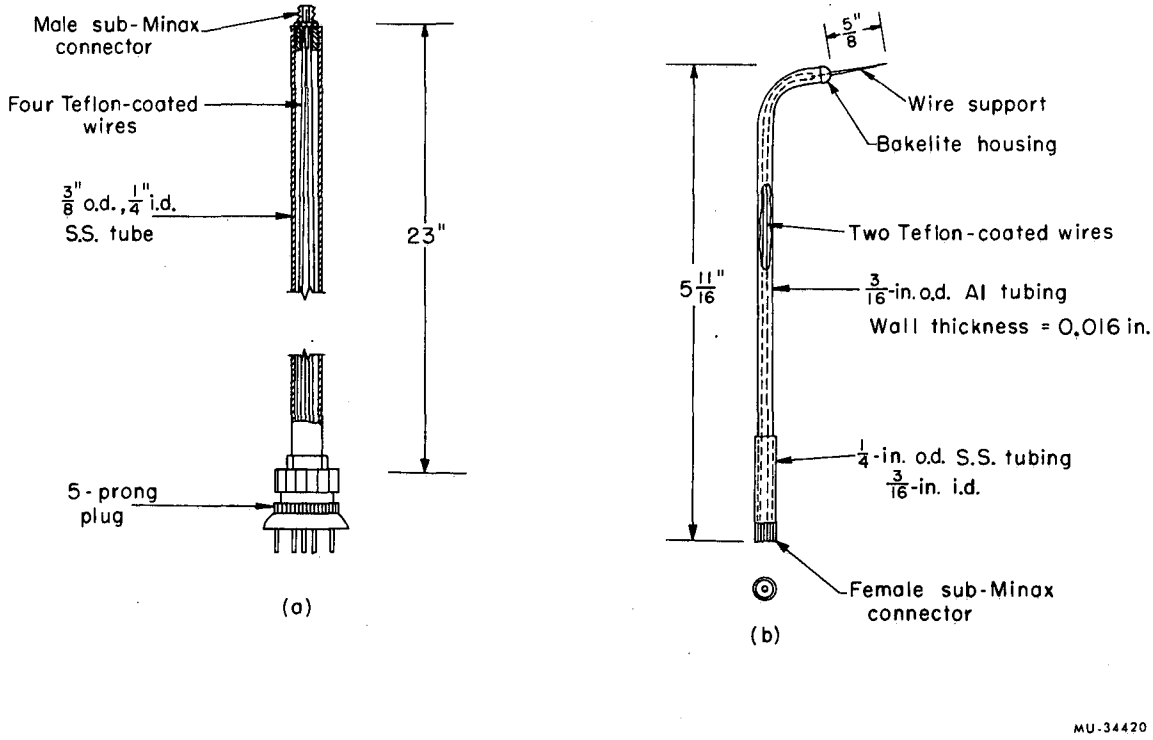

Fig. 3. Engineering drawings of hot wire anemometer probe. (a) Lower half. (b) Upper half.

is mounted on a 15-7/16-in. by 2-in. by 1/4-in. cold-rolled steel bar. A 3/4-in. pitch diameter spur gear can be moved up and down along a 10-in. long, 32-pitch rack (on the side of the steel bar) by turning the knob mounted on the front of the assembly. Position of the probe is indicated by a scale mounted on the front of the bar, parallel to the probe. The smallest scale division is 1/100th-in. The assembly may be attached to a bracket at the base of the test section by two 1/4-in. nuts and bolts which are placed through the holes provided at the top of the steel bar.

2. Wire Mounting

The platinum wire is the key component of the hot wire anemometer and must be connected to the two wire supports in such a manner that it will yield reproducible and meaningful results. An excellent summary of the most important considerations in this regard is given by Lowell.[15] Lowell suggests that the wire be mounted with a mounting jig since the amount of tension set in the wire is critical for the transonic and supersonic flow ranges. However, in the case of flow rates well below the speed of sound, the amount of wire tension is not critical, and therefore a simpler procedure was developed to mount the platinum wire.

A 1-1/4-in. length of Wollaston wire (a 0.00025-in. diam. platinum wire coated with a 0.002-in. diam. silver jacket) was soldered to the ends of a U-shaped, heavy gauge platinum wire. The jacketed portion of the wire was dipped in 15% nitric acid etching solution at steam bath temperature until all the silver was removed. The probe was supported so that the two steel supports rested in the same horizontal plane. A lab jack was then placed several inches below the probe supports. Scratches were made at the positions where the wire was to be soldered to the prongs. The fine platinum wire was looped over the two supports and then the heavy gauge portion of the wire was placed beneath the prongs on the jack. The wire was positioned so that it rested on the scratches. A stereoscopic microscope (20 power) was used in mounting the wire. The lab jack was lowered slowly until it supported only a

small fraction of the weight of the heavy-gauge wire. The amount of tension produced depended upon the diameter of the fine wire as well as the diameter and length of the larger wire and the proportion of the total weight supported by the jack. Once the fine wire was in sufficient tension, it was silver-soldered to the two supports. Silver solder paste consisting of small shavings of silver solder suspended in a fluxing medium was most satisfactory for this application. Solder was first applied to the desired joint, the support was then heated at a distance 3/8 in. from the joint with a micro-torch until the prong was red-hot (care was taken not to apply the flame of the torch directly to the joint). The solder was melted by the conduction of heat along the support. Once the wire was soldered in place, the remainder of the platinum wire was cut off.

Before calibration, the wire was visually checked for uniformity of diameter with the 160-power microscope lens. An increasing amount of current was passed through the wire until it began to become dull red. If the wire diameter was non-uniform, the regions of smallest diameter would become red well before the remainder of the wire due to localized heating. Otherwise, if the wire was uniform, it became dull red at the center first, and a slight increase in current extended the dull-red zone to 80% of the length of the wire. If the wire was acceptable, it was then annealed for approximately two hours by heating it electrically to a dull-red color. It was found, as previously shown by Spangenburg[23] that if this step was not taken, reproducibility in calibration was poor due to hysteresis effects.

3. Bridge Circuit

A Kelvin double-bridge was used to measure the resistance of the platinum wire. This type of bridge measures the wire resistance without including the lead resistance. A circuit diagram is shown in Fig. 4.

The bridge used is similar to that described by Lowell.[15] Current is supplied to the bridge by a Power Designs Inc. transistorized power supply (model 5015A); the unit has a variable output of 0 to 1.5 A.

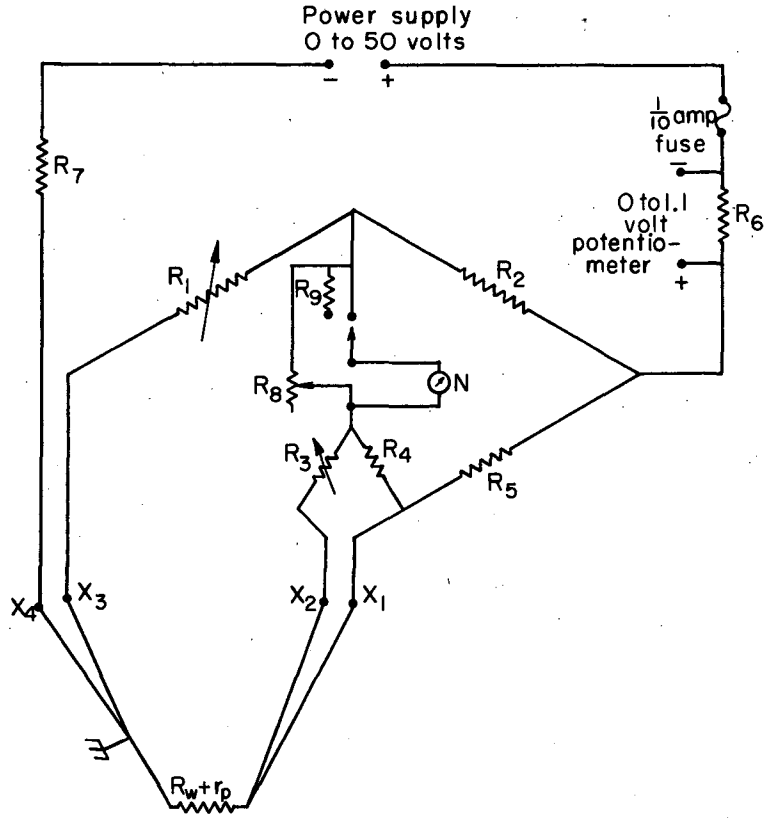

MU-34424

Fig. 4. Circuit diagram of Kelvin double bridge.

R_1 = 10 kΩ decade box
R_2 = 100 Ω - 1 W precision resistor
R_3 = 10 kΩ decade box
R_4 = 100 Ω - 1 W precision resistor
R_5 = 1 Ω standard resistor
R_6 = 1 Ω standard resistor
R_7 = 500 Ω - 1 W precision resistor
R_8 = 4 kΩ wire-wound shunt
R_9 = 1 kΩ precision resistor
N = Null detector

X_1, X_2, X_3, X_4 = Probe lead sockets

(0 to 50 Vdc). The current which passes through the hot wire is determined by measurement of the voltage drop across R_6, a 1-ohm Leeds and Northrup ("L & N") precision resistance standard (model 4020) with an L & N model K-2 potentiometer. An L & N deflection galvanometer indicates balance of the potentiometer circuit; the Eppley Laboratory standard cell incorporated in the potentiometer has an emf of 1.01927 V. The two fixed arms of the double bridge, R_2 and R_4 are 100-ohm, 1W precision wire-wound resistors. The multiplying-resistance, R_5 is a 1-ohm L & N model 4020 similar to R_6. Two 10 kilohm decade boxes are used as variable resistances (R_1 and R_3) on the other arms of the bridge.

Bridge balance is indicated by a Minneapolis Honeywell model 104 WIG electronic null detector, which has a sensitivity of 0.001 microamperes per mm deflection. Sensitivity is controlled by a 1-kilohm fixed resistor (R_9) and a 4-kilohm wire-wound shunt (R_8).

Harris[7] has shown that if the balance condition

$$R_1/R_2 = R_3/R_4 \tag{17}$$

is achieved, the sum of the wire and probe support resistances, $(R_w + r_p)$ will be given by

$$R_w + r_p = R_5 \, (R_1/R_2)$$

Since the resistance of the platinum wire, R_w is much greater than the resistance of the wire supports, r_p, therefore the latter may be neglected and

$$R_w = R_5 \, (R_1/R_2) \tag{18}$$

The operation of the bridge and associated components was simple. To measure the temperature of the ambient fluid stream, 1/4 mA was

passed through the wire (a low current was chosen so that the wire would not be heated electrically), and the two decade boxes (R_1 and R_2) were adjusted until the potential across the null indicator was zero. This automatically satisfied relation (17). Velocity was then measured as follows.

The wire temperature for any given profile was first chosen (so that the temperature difference would be approximately 200° C) and the corresponding resistance was set on the two decade boxes. The current through the wire was gradually increased until null was indicated. The current flowing through the wire was then determined by measurement of the voltage drop across R_6, a standard 1 ohm resistor with the K-2 potentiometer.

B. Hot Wire Anemometer Calibration

The hot wire anemometer is calibrated for velocity and temperature in the equipment shown in Fig. 5. Compressed air bubbles through a humidifier, flows through an orifice section where the flow rate is measured, and then through a calming tube where the velocity becomes well developed. The probe is placed at the end of this section. Flow rates are chosen so that the flow is laminar in the tube.

1. Equipment

The humidifier is fabricated from a 62-in. length of 2-in. iron pipe. Reducers attached to the ends of this pipe join it to the 1/4-in. brass pipe lines both upstream and downstream of the humidifier. The humidifier is 3/4-filled with 1-in. Berl saddles. Several needle valves upstream and downstream of the humidifier, as well as a pressure regulator facilitate smooth operation of the unit.

The orifice section consists of two lengths of 2-in. i.d. brass tubing (wall thickness = 0.125 in.) and an orifice plate. The upstream section is 30-in. long, has an end-plate soldered to its upstream end and a 3-1/4-in. diameter flange soldered to its downstream end. Radiation

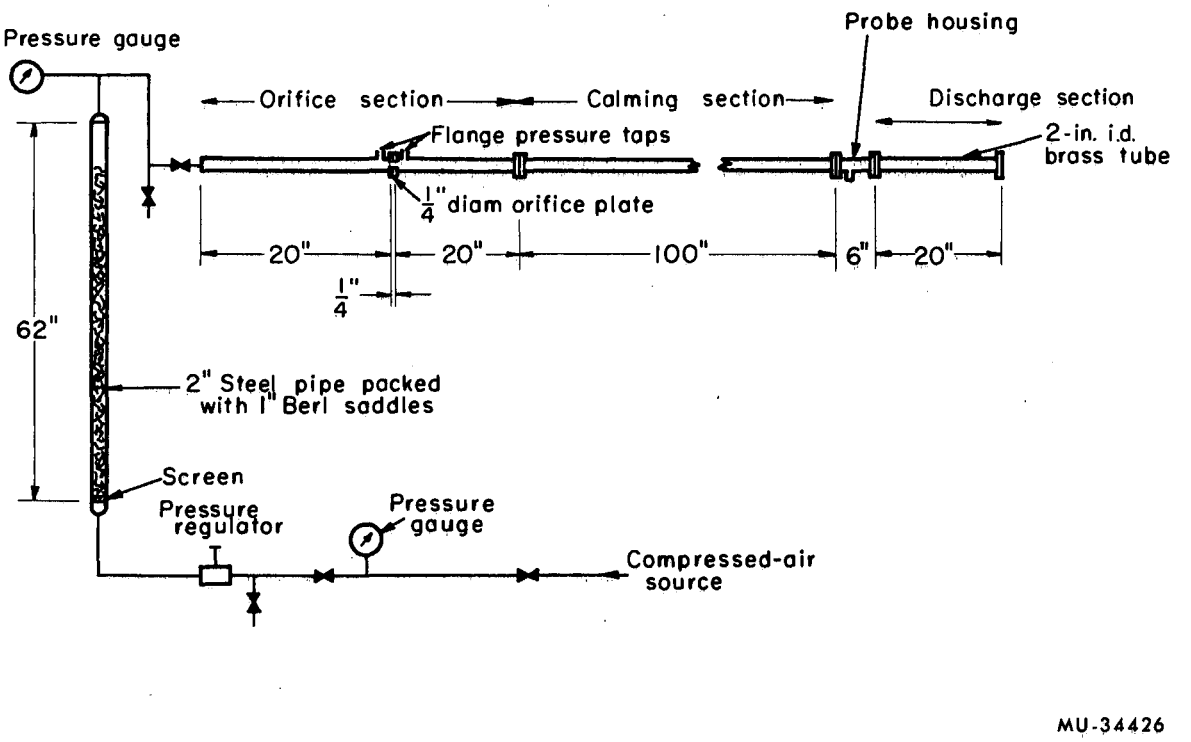

Fig. 5. Equipment used for calibration of hot wire anemometer.

Laboratory standard tubing fittings (RL fittings) soldered to the end-plate join the quarter-inch pipe to the orifice section. The downstream section is 20 in. long, and has 3-1/4-in. diameter flanges at both ends. The orifice is fabricated from a 9/32-in. thick sheet of brass. The o.d. is 3-1/4 in., the upstream i.d. is 0.2508 in. The downstream face of the orifice is beveled at a 45° angle to the tube axis as suggested by Stearns et al.[26] Two "flange taps" are drilled at locations one inch upstream and downstream from the face of the orifice plate.

A parabolic laminar velocity profile develops in a 100-in. long, 2-in. i.d. brass calming tube. This section is connected to the orifice section and probe housing by 3-1/4-in. flanges similar to those used in the orifice section. The probe housing is similar to the calming tube, except that it is only 6-in. long. The probe is inserted at the center-line 2 in. downstream from the first flange. A 20-in. long, 2-in. i.d. brass discharge section is joined to the probe housing by a 3-1/4-in. diameter flange. Heat is supplied to the system by electrical resistance heating tape, which is wrapped around the humidifier walls and the calming tube. The latter is used to keep the wall temperature equal to that of the fluid stream. The power input is controlled by variacs.

Two manometers are used to determine the flow rates through the orifice. The high range manometer is manufactured by the Uehling Instrument Co., and uses a special oil having a specific gravity of 0.795. The range of this slanting manometer is 0 to 6 in. of water; it is also used to indicate the pressure drop across the larger orifices described in section IV-B-5. The other slanting manometer has a range 0 to 0.5 in. water. This gauge is manufactured by the Meriam Instrument Co., and uses an oil having a specific gravity of 0.827.

The 0.2508-in. diameter orifice was calibrated with a wet test meter. The results of that calibration are shown graphically in Appendix A (Fig. 26).

2. Calibration Procedure

The wire was first calibrated for temperature. The probe was inserted in its housing, the calming section heaters turned on, and the air flow set at as high a rate as was possible. An iron-constantan thermocouple was placed very close to the wire. Simultaneous thermocouple emf and wire resistance readings were made at a number of temperatures within the range 20 to 125° C. Wire resistance was plotted as a function of temperature (see Fig. 27, Appendix A); if the two were related linearly, this served as further evidence that the wire diameter was uniform. Since resistance is a linear function of temperature for the range of 0 to 300° C, the above-mentioned plot was extrapolated to 300° C.

The velocity calibration was also performed in the equipment described in Section B-1. The probe was inserted in its housing, and was centered to plus or minus 0.01 mm with a cathetometer. The housing and discharge sections were then attached to the rest of the equipment.

Wires two and three were both calibrated at low air temperature and humidity. The saturator was filled with cold water, and air bubbled through it until the temperature of the water became constant. Air flow was then set at the maximum desired value, and the hot wire bridge balanced. Readings recorded were pressure drop across the orifice, static pressure upstream of the orifice, hot wire current, hot wire resistance, cold (ambient temperature) wire resistance, room air temperature and humidity of the air, which was measured using a thermal conductivity cell as described in detail by Wasan.[30] The flow rate was then reduced by venting some of the air downstream of the humidifier, and another set of readings were noted. This procedure was continued until approximately 25 readings had been taken within the working range of the system (0.20 to 5.0 ft/sec).

Wire number three was used for the high-temperature profiles, and thus was also calibrated at high temperature and humidity. The humidifier was first filled with water and heated. At the same time, the air

was bubbled through the column at the highest flow rate desired. The walls of the calibration equipment were also heated to the anticipated air stream temperature. The probe was placed in the housing and attached along with the discharge section to the calming section. A gas sampling tube was run in through the discharge section so that the gas stream could be sampled. Once the air temperature at the exit of the humidifier was up to the desired value, and the water composition within the range planned upon, a series of readings similar to those taken in the calibration at room temperature were recorded. In addition, the air temperature at the orifice, the orifice plate temperature and the heater settings were noted.

Temperature and velocity calibration data are tabulated in Appendix B.

IV. EXPERIMENTAL EQUIPMENT FOR MASS AND MOMENTUM TRANSFER STUDIES

A. General Description

The equipment shown schematically in Fig. 6 was designed for the study of mass transfer from the liquid to the gaseous phase in the mass transfer entry region of a pipe under variable conditions of liquid and gas temperature and Reynolds number.

Room air is blown through an orifice meter, a finned resistance heater and on to a calming section where the velocity profile is allowed to develop before entering the test section.

The test section may best be visualized as a countercurrent double-pipe mass exchanger. The air stream flows through the inner ceramic porous pipe, while water is circulated in the annulus. The water is forced under pressure through the pores of the ceramic material and vaporizes into the air stream upon reaching the inner surface of the pipe. After flowing through the test section, the humid air stream is discharged from the room. A sampling tube connected to a thermal conductivity cell sucks a mixed-mean sample of the exit stream.

In addition to the measurement of overall mass transfer rates, provision has been made to measure velocity, temperature and composition profiles at two different positions within the length of the test section. The velocity and temperature are measured with a hot wire anemometer, and the composition is measured with a gas thermal conductivity cell.

A photograph of the equipment described above is shown in Fig. 7. The equipment is designed for flows with Reynolds numbers ranging from zero to 20,000, for air temperatures from 20° C to 110° C and for water temperatures from 20° C to 95° C. The scope of experimental work discussed in this thesis has been limited to the Reynolds number range of 9,000 to 17,000 and to the lower half of the air and water temperature range for reasons which will become evident.

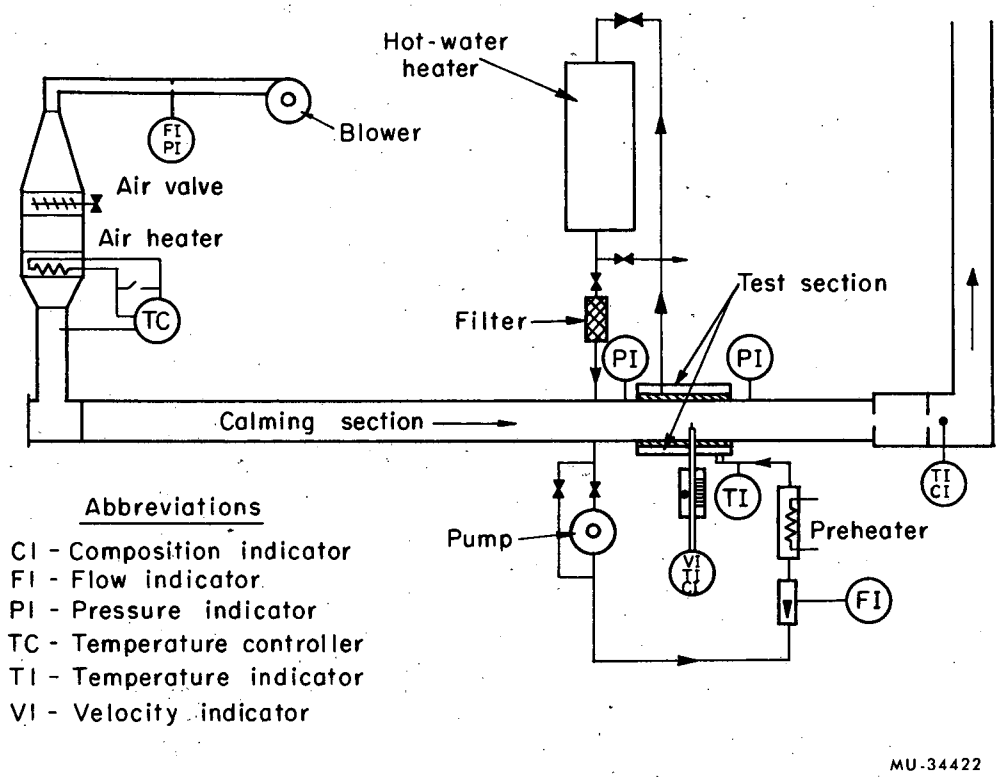

Fig. 6. Schematic of mass and momentum transfer equipment.

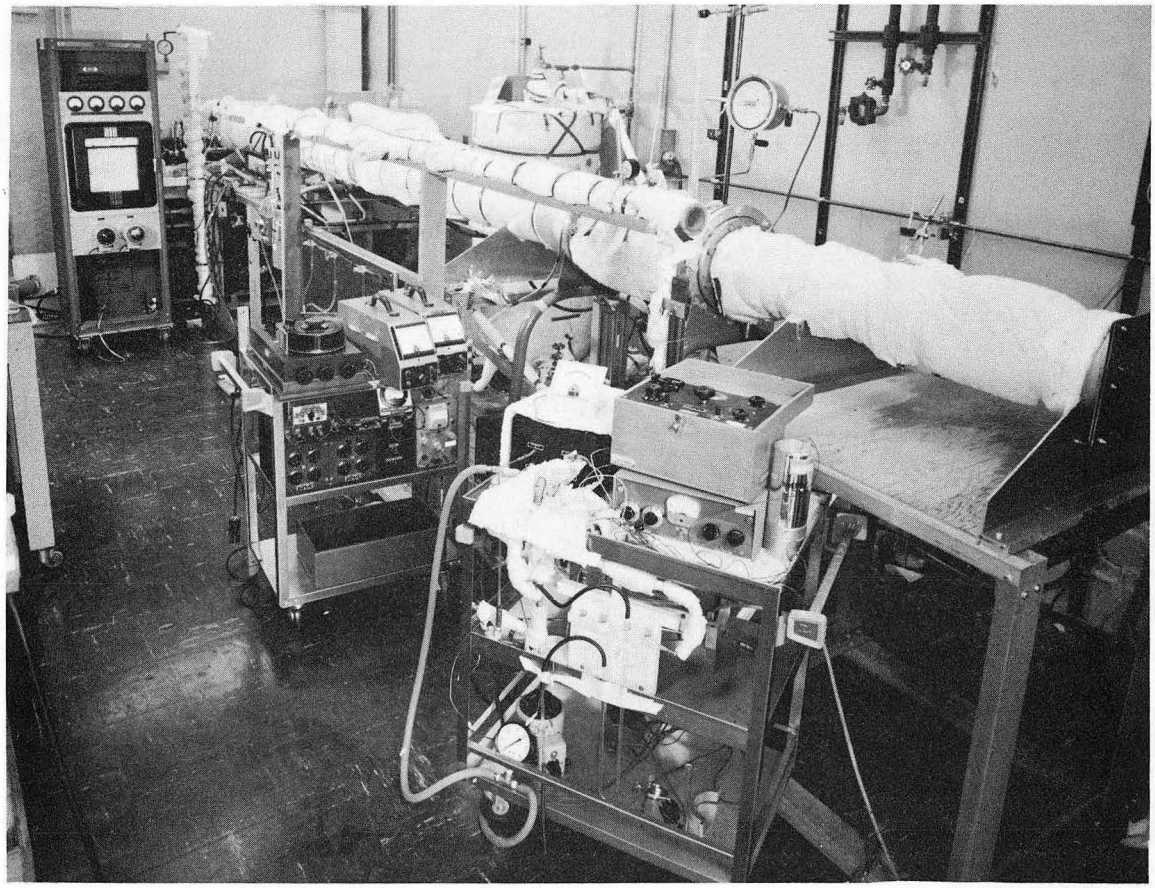

ZN-4384

Fig. 7. Overall view of experimental equipment.

B. Equipment Specifications

1. Entrance Section

Air is blown into the apparatus from the room by a 1/4 HP centrifugal blower whose maximum capacity is 370 lb.air/hr when connected to the equipment as shown in Fig. 6. This flow rate may be increased by about ten percent by removal of the suction side air filter screen from the blower. To obtain test section Reynolds numbers greater than 20,000 it is necessary to use a more powerful and efficient blower.

The air then passes through an orifice meter section consisting of two sections of 3-in. i.d. brass pipe. The upstream section is 40 in. long, and is welded to a 5-3/16-in. flange which secures the orifice plate in place. The downstream section is similar, but is only 20 inches long. Two 1/4-in. diameter "flange" pressure taps are drilled one inch from either side of the orifice plate. Two orifice plates, 1.625 and 2.115 inches in diameter are used for the low and high flow ranges respectively. Both are fabricated of 1/4-in. thick brass plate, 5-3/16 inches in diameter, have sharp upstream edges, and are beveled at an angle of 45° on their downstream side to comply with the specifications suggested by Stearns et al.[26] The air then flows through 3 ft of 3-in. i.d. flexible hose and on to an air valve (Carnes Corp., Model V 16.6 M) which may be used for coarse control of air flow, especially at high flow rates.

The gas stream passes through a short duct and into a bank of nine 0.7780 kW finned resistance heaters. The unit is manufactured by the Wesix Electric Heater Co., operates at 208 Vac, 1 phase, and draws 33.6 amperes. When the 7 heaters that are connected to the power supply are simultaneously in operation, the steady-state test section inlet temperature is found to lie between 80° C and 120° C for the Reynolds number range of 5,000 to 20,000. Control of the heater is described in part 5 of this section.

The air valve and heater are joined to the system by ductwork fabricated of 1/32-in. thick aluminum alloy sheet. The former is joined

to the upstream side hose by a duct 23-1/2 in. long, which expands from a 3-1/16-in. outer diameter at the upstream end to a flow area 16 in. by 16 in. at the air valve end. A 1-1/2-in. wide flange is welded around the downstream perimeter so that the duct may be connected to the valve. The air heater is connected in a similar manner to the calming section pipe. The duct upstream flow cross section is 17 in. square, and the downstream inner diameter is 8-5/8 in. This duct is 10 in. long. The air valve is connected to the air heater by a tapered duct fabricated from the same sheet metal as is mentioned above. The upstream end has a flow cross section of 16 in. by 16 in., the downstream end cross section is 17 in. square. Both ends have 1-1/2-in. wide flanges welded around their perimeters so that the duct may be attached to the air valve and the heater.

It is desirable that the velocity profile entering the test section be well developed; as a result, a calming section approximately 20 pipe diameters long is used, as recommended by Olsen and Sparrow.[21] The calming section is constructed from 7-1/2-in. i.d., 1/4-in. thick aluminum tubing, and is welded to 2 shorter pieces of the same tubing as shown in Fig. 31. The 31-3/8-in. length is joined to the air heater exit duct by a sheet of 1/8-in. thick rubber wrapped around the tube and the heater outlet duct lip, and held in place by two 9-in. hose clamps. In addition, a thermal well is installed in this leg of the section, 8 in. downstream from entry. The temperature sensor inserted in this well is connected to the temperature controller which is described in part 5 of this section.

The calming section is 168-3/8 in. long. Access to the upstream end of the calming section is provided by a 11-3/8-in. diameter, 1/2-in. thick aluminum end-plate, which is fastened to a flange of the same diameter and thickness on the calming section by eight 9/16-in. bolts as shown in Fig. 31. Boundary layer growth is initiated by an aluminum ring, 7-1/2-in. o.d., 5/16-in. thick and 1/4-in. deep placed 10-3/4 in. downstream from the flange. The distance from the ring to the head of

the test section is 157-3/8 in. which corresponds to an effective calming length of 21 pipe diameters. The downstream end of the tube is joined to the test section by a 1/2-in. thick, 11-3/16-in. diameter aluminum flange (see Fig. 32). A 3/16-in. diameter pressure tap is drilled 1 in. upstream of the test section entry; 1/4-in. RL fittings are used to provide convenient connection to a pressure gauge. In addition, three traversing ports are situated as shown in Fig. 31. The entire calming section, and also the test section are insulated with three layers of fiberglass insulation.

2. Experimental Test Section

In the past, wetted wall columns have been used to study vaporization of liquids.[1,6] In the wetted wall column, a liquid film flows down the walls of a circular cylinder, and at the same time, air is blown through the pipe over the film, thus allowing the liquid species to be transferred to the gas phase. In doing so, rippling in the liquid film is produced, and thus it is difficult to measure the surface area available for mass transfer. In this study, it was decided not to use the wetted wall column for this reason. The transfer section described below is designed so that this uncertainty no longer exists.

The test section functions as a countercurrent double-pipe mass exchanger. A pictorial view is shown in Fig. 8, and an assembly drawing appears in Fig. 32. Water circulated in the annulus penetrates through the porous pipe and diffuses into the turbulent air stream.

The essential component of the test section is a 2-ft long porous ceramic cylinder. An inner diameter of 7.5 in. was chosen so that the concentration boundary layer thickness in the Reynolds number range of interest would be of the order of 0.2 in., thus facilitating concentration measurements at many points within this region. The cylinder is referred to by its manufacturer (Filtros Incorporated) as a "'35' Electrolytic Diaphragm". It is a porous porcelain material of high alumina content; pore size ranges from 2 to 7.5 microns in radius. The cylinder walls are 7/32 in. thick and will withstand pressures up to 5,000 psig.

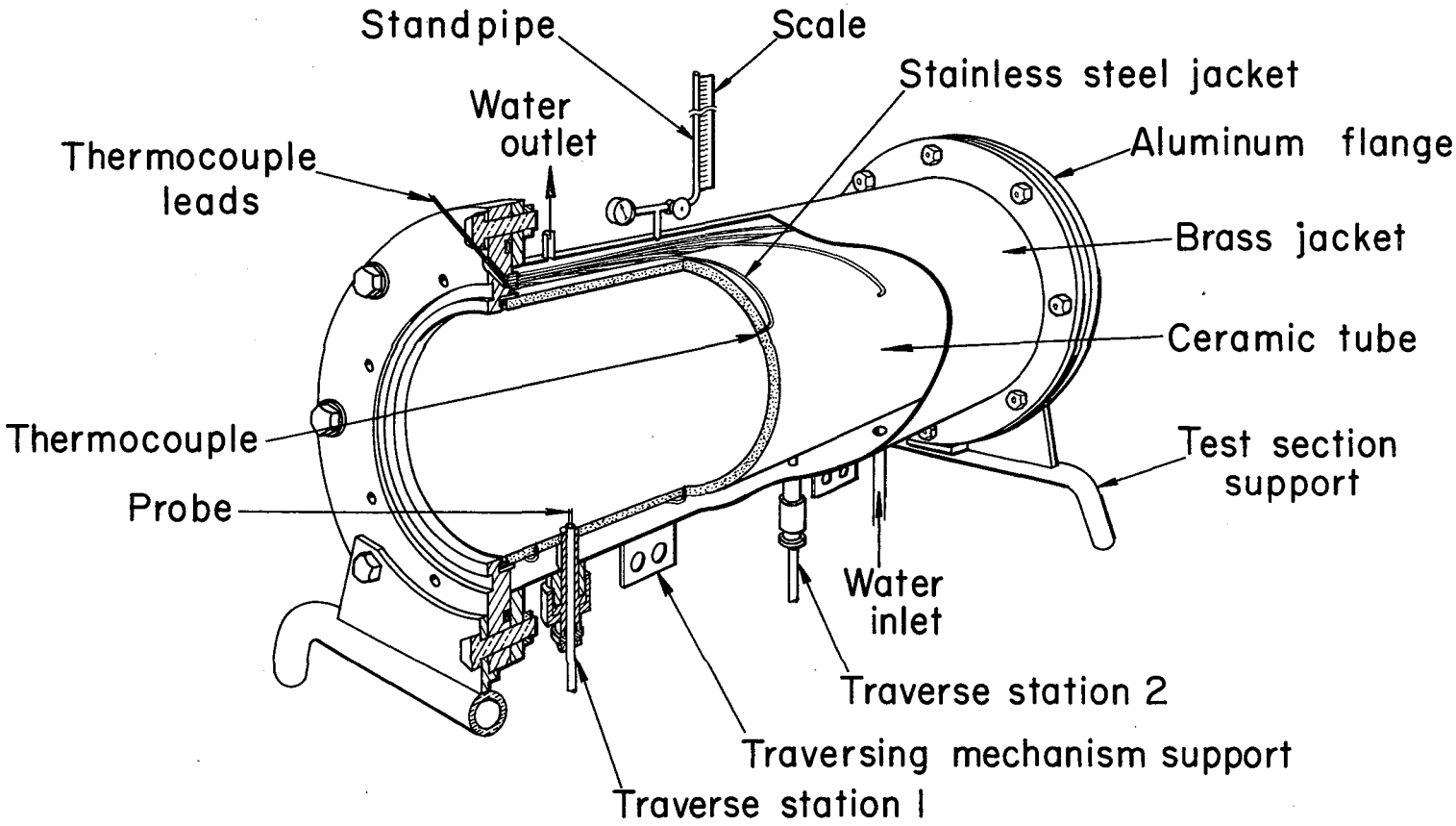

MUB-2516

Fig. 8: Pictorial view of test section.

Two 11/16-in. diameter holes are drilled 3-1/16 and 15-1/8 in. along the length of the tube to accomodate a probe (see Fig. 9A). These positions shall be referred to as stations I and II respectively. Fifteen iron-constantan thermocouples are installed at stations along the length of the test section as shown in Fig. 9 A. The thermocouples are protected from their wet environment by 3/32-in. o.d. stainless steel tubing (1/16-in. i.d.) and the thermocouple tips are held in place 1/32 in. from the inner surface of the pipe by Saureisen Electrical Cement (no. DW-30). The stainless steel jackets are secured to the outer wall of the ceramic tube by a silicone rubber sealant (GE RTV-102). A detailed drawing of a thermocouple installation is seen in Fig. 9 B.

The water jacket is fabricated from a 22-3/4-in. length of brass tubing, 10-in. i.d. and 0.148-in. thick. Two 14-in. o.d., 1/2-in. thick brass flanges are welded to the two ends of the tubing. Eight 9/16-in. drill thread holes are spaced equally in a 12-3/4-in. circle. Water enters the annular volume through a 3/4-in. hole drilled 2 in. from the downstream end of the pipe as shown in Fig. 32. The water leaves tangentially through a hole of the same diameter drilled 1-3/4 in. from the upstream end of the jacket, and 2-1/16 in. above the center-line, on the left hand side. A hole has also been drilled at the top of the water jacket, 6-5/8 in. downstream from the upstream brass flange to accomodate a pressure gauge and an 18 ft high standpipe which is used both as a test section water pressure indicator and as a vent. Finally, two 3/4-in. holes are drilled as shown to accomodate the probe. When the test section is assembled, the 3/4-in. holes in the jacket are lined up with the holes drilled in the ceramic tube. The probe traversing mechanism is held in place by one of two brass plates, each of which is welded to the outer surface of the jacket, 2-3/4 in. downstream from one of the two probing stations.

The ceramic tube and water jacket are held in place by two 3/4 in. thick, 14-in. diameter aluminum flanges, located at each end of the test section. Seals between the flanges and the ceramic tube and water jacket

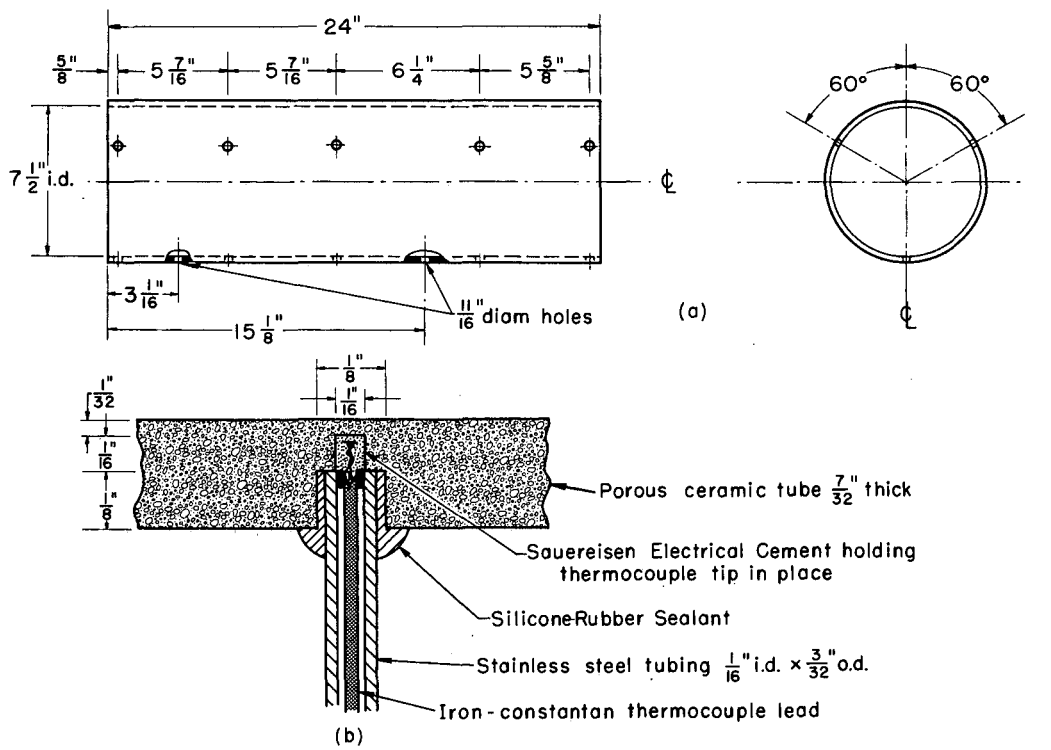

Fig. 9. (a) Location of thermocouples in ceramic tube.
(b) Typical thermocouple installation.

are obtained by placing Neoprene O-rings and sealing strips as shown in Fig. 32. The outer aluminum flanges of the test section are held in place by 8 9/16-in. bolts which are also secured to the brass flanges. Eight 9/16-in. bolt holes are also drilled at equal intervals around the outer surfaces of the two aluminum flanges on a 10-in. circle to receive the bolts that will hold the calming and discharge section flanges in place.

Passage to the air stream is provided to the probe by two 3/4-in. o.d. pipes (3/8-in. i.d.), 3-in. long which are inserted in the two 3/4-in. holes drilled at the bottom of the water jacket for that purpose. The uppermost end of the tube rests against a rubber grommet which forms a seal between the ceramic pipe and the tube. Male and female RL fittings are attached to the lower end of the pipe.

3. Discharge Section

The discharge section consists of a 7-1/2-in. i.d. (8-in. o.d.), 44-in. length (5-7/8 diameters) of aluminum tubing followed by a 15-in. long, 8-in. square duct. The aluminum tubing is connected to the test section by a 1/2-in. thick, 11-3/16-in. diameter aluminum flange; eight 9/16-in. hex nuts spaced equally in a 10-in. circle as shown in Fig. 32 secure this section into place. The square and round ducts are joined by two 10-1/4-in. square flanges (1/8-in. thick) held together by 8 1/4-in. nuts and bolts. A 3-in. diameter orifice cut in a 10-1/4-in. square sheet of 1/8-in. thick aluminum plate is used to mix the effluent gas stream. The iron duct is then connected to another section of the same cross section by 10-1/4-in. square flanges. A 2-in. diameter orifice cut in a sheet of aluminum similar to the 3-in. orifice is inserted between the second set of square flanges. A thermometer bulb and gas sampling tube lie in the vena contracta of this orifice, and help to indicate the effluent gas temperature and composition, the latter being measured with a thermal conductivity cell. The duct then makes a rounded 90 degree bend and leads upwards to an exhaust port on the roof of the building.

4. Water Circulation System

Warm water is supplied to the test section by the water circulation system shown in Fig. 6. Distilled water is stored in a 50-gallon water heater (Wesix Electric Heater Co. Model S-50-200) which is powered by four 5-kW immersion heaters. These heaters are found to be more than sufficient to heat the water to 95° C and keep it at that temperature at the highest circulation rate used (3.5 gpm). The heaters draw 55 amperes at 208 Vac (3 phase). Temperature control settings on the four heaters operate well within the range of 50 to 95° C.

The distilled water which leaves the heating tank through a 1/2-in. copper line is filtered and then pumped through a rotameter (range 0 to 5.7 gpm water at room temperature) by a 1/4 HP centrifugal pump. A short length of 3/4-in. copper tubing connects the rotameter to the preheater. The preheater, which can be used when high operating temperatures are desired, is constructed from an 18-in. long, 3-in. i.d. brass tube. A 4-1/2-in. diameter flange fastened to the upstream end of the tube houses four 500 W immersion heaters. The distilled water then flows on to the test section through a 1-1/4-in. brass tube; a thermometer is inserted in this tube 2-3/4-in. upstream of the test section inlet. The water enters the test section at the downstream end, leaves tangentially at the upstream end, and is returned to the water heater in 1/2-in. copper tubing. A thermometer is inserted in the line, 1-1/4-in. downstream from the test section water outlet.

5. Auxiliary Equipment

(a) Air Temperature Control

Air temperature may be controlled by either an automatic on-off controller or a manual variable input control switch. A circuit diagram is shown in Fig. 33.

The on-off controller produces sinusoidal temperature fluctuations (amplitude varies from 5° C at 35° C to 12° C at 75° C), thus this device is used only when the equipment is left unattended, especially

during warm-up periods. The controller is manufactured by the Minneapolis Honeywell Co. (Model 1667A-1034-1) and has a control range of 50° to 250° F. The sensing element is located in the thermal well immediately downstream of the air heater. Three heaters heat the air to approximately 50° to 70° C in the Reynolds number range of 5,000 to 20,000.

The four remaining heaters are operated manually to reduce the magnitude of the temperature fluctuations. Three heaters are operated individually by switches, and the fourth is connected to an autotransformer. The manual control section may be used for heating air to temperatures as high as 80° C. If it becomes necessary to carry out runs at higher temperatures, the balance of the heaters could easily be connected to the manual control section.

Safety provisions incorporated in this equipment include a heater high-temperature cutoff, which is mounted on the heater shell, and is included in the 120 volt controller circuit, and also a circuit which disconnects the heaters from the power source when the blower is inoperative.

(b) Pressure-Measuring Equipment

A temperature-compensated aneroid barometer manufactured by the Taylor Instrument Co. is used to indicate both room and test section total pressure. The barometer is housed in a 5-1/2 in. o.d. brass tube. A plate of the same diameter and a 6-3/8 in. diameter flange are soldered to the rear and front sides of the tube respectively. Two 5/16 in. medium length nipples are soldered to the sides of the housing. Quarter inch needle valves are attached to these nipples, as well as to 1/4 in. copper tubing which connects the gauge to pressure taps upstream and downstream of the test section. A 1/2 in. thick, 6-3/8 in. diameter lucite front-cover sits on the flange. A 5-1/2 in. thick, 6-3/8 in. diameter O-ring placed between the flange and the cover seals the barometer within the housing. The lucite is secured to the flange by 6-1/4 in. screws equally spaced in a 6 in. diameter circle.

Two manometers are used to indicate the pressure drop across the orifice meter and the upstream static pressure tap. Both are slanting

gauges manufactured by the Uehling Instrument Co. The range of the manometers is 0 to 6-in. water. Uehling oil (sp.gr. = 0.795) is used to give direct readings in inches of water.

(c) Equipment Supports

The aluminum tubing is mounted on supporting stands constructed from lengths of 2x4-in. wood. The calming section support is 11-1/2-ft long, 30-in. wide and 36-1/2-in. high; the tubing downstream of the test section is mounted on a similar support 2-5/6 ft long. Both lengths of tubing sit on 1/8-in. thick aluminum sheet supports which are bolted to the wooden supports.

The air valve and heater are mounted on a sheet of steel, 2-ft long by 4-ft wide, 1/8-in. thick. Half of this sheet is bolted to the calming section support. Two 2 x 4 x 38-in. wooden planks are secured beneath the free end of the sheet of metal to support the weight of the valve and heater.

V. EXPERIMENTAL PROCEDURE

The hot wire anemometer was first calibrated and then tested by measuring the velocity distribution in the calibration equipment where the velocity profile was known to be parabolic. Several preliminary profiles were then measured in the experimental equipment at approximately 25° and 50° C and Reynolds numbers ranging from 5,000 to 20,000. This range of Reynolds number was chosen because at these low flow rates the wall region, where the concentration and velocity gradients are greatest, is relatively large thus facilitating accurate measurements of velocity and concentration in this region.

In the present study, runs were performed with vaporization conditions at Reynolds numbers greater then 9,000 because it was observed that velocity profiles measured at lower Reynolds numbers were unsymmetrical. The velocity profiles were measured at approximately 25° and 50° C. The procedure followed at these two conditions differs, and therefore it will be described in detail in separate sections.

A. Measurement of Velocity Profiles Without Vaporization

Velocity profiles were first measured without vaporization. The hot wire anemometer probe was secured at station zero (upstream of the test section), the blower was turned on and the flow rate was set by adjusting the size of the intake port of the blower so that the test section Reynolds number was about 9,500. The center-line velocity and pressure drop across the orifice meter were measured and then rechecked every fifteen minutes until steady values were observed. Then velocity and temperature profiles were measured in the calming section in addition to measurements of air humidity, test section total pressure, pressure drop across orifice meter, orifice meter upstream tap pressure and room temperature. The flow rate was then changed to a Reynolds number of 16,950 and the above procedure was repeated. The procedure for measurement of velocity distributions at stations one and two was identical to that followed at station zero.

In addition to the above measurements, wire resistance and current were measured in stagnant air across the diameter of the test section to determine the magnitude of the "wall effect" reported by Dryden.[5] This effect is caused by the transfer of heat to the pipe wall by natural convection, and leads to velocity readings in the vicinity of the pipe wall which are higher than the true values. For the stagnant air readings mentioned above, it was observed in this study that for the region between the axis of the tube and 0.08 in. from the pipe wall, the heat transferred from the wire was constant. At distances closer than 0.08 in. from the wall, however, the heat transferred from the wire increased as the wire approached the wall. The amount of heat transferred to the wall was determined by calculating the difference in heat transferred at any point near the wall and the heat transferred at a distance greater than 0.08 in. from the wall. In calculating the true velocity of a gas stream flowing over a heated wire in the vicinity of a solid boundary, it is necessary to subtract the heat transferred to the wall from the total amount of heat transferred from the wire. A wall effect correction curve is given in Appendix B.

B. Measurement of Velocity Profiles at Low Vaporization Conditions

The procedure for the runs performed with mass transfer was similar to that described above with the exception of the operation of the water circulation system. The air flow was set at a rate corresponding to one of the dry runs. Initially, distilled water at room temperature was circulated in the test section annulus at a sufficiently high pressure so that wetting occurred on the inner surface of the ceramic pipe. Once all of the inner surface was visibly wet, the test section water pressure was gradually decreased by reducing the water circulation rate until the rate of penetration of water through the ceramic pipe equaled the rate of diffusion of water into the turbulent air stream. This procedure was checked quantitatively by measuring the composition of the gas stream close to the wall while lowering the test section water pressure. When the walls were wet, the composition of the

gas remained constant. For details on the measurement of concentration distribution in the test section, the reader is referred elsewhere.[30]

The velocity and temperature profiles were then measured in addition to the test section water pressure, and test section water inlet and outlet temperatures. Velocities were measured at values of the ratio of distance from the pipe wall to the radius (y/r) as small as 0.0045, which corresponds to approximately 100 pipe pore diameters. This distance is believed to be sufficiently large for the wetted surface to appear to be continuous.

C. Measurement of Velocity Profiles Under Moderate Vaporization Conditions

Velocity profiles were measured at about 50° C and a Reynolds number of 9,800. The procedure followed is somewhat more involved than that described in the previous section. Twenty-four hours before the run, the hot water heater was filled with distilled water and the temperature controllers were set at 50° C. To heat the equipment to the desired operating conditions, it was necessary to set the air blower to the highest possible rate, and the air heater temperature controller at 55° C. Once the calming and test sections were sufficiently hot, the temperature controller was turned off and the manual controls were set so that the temperature of the air entering the test section was about 50° C. The hot wire anemometer was placed at station two and the temperature checked at half-hour intervals. When the air temperature was steady, the velocity and temperature profiles were measured. A procedure similar to the one described in the previous section was followed for the measurement of velocity and temperature profiles under vaporization conditions at 50° C.

VI. EXPERIMENTAL RESULTS AND DISCUSSION

A general equation which describes the operation of the hot wire anemometer in a gas stream having variable fluid properties has been developed in Section II. In order to illustrate the effect of variable fluid properties on the calibration curve, three hypothetical cases have been computed using Eq. (13) for water vapor compositions ranging from 0 to 20 mole percent. The results of these calculations appear in Fig. 10. It is noted that in the low velocity range, for a given current and resistance, the velocities at the two extreme compositions differ as much as by 45 percent. It may therefore be concluded that if variation in composition is not accounted for in the interpretation of the experimental data, velocities measured in fields of elevated composition will appear to be higher than the true values.

Data for the velocity calibration performed with air containing 2.29% water vapor and at 22° C are shown in Fig. 11 where $\sqrt{u}$ is plotted vs. $I^2R_w/\Delta t$. Constants K_1 and K_2 in Eq. (13) were determined from the two velocity points shown by the solid points on the figure. The curve corresponding to Eq. (13) based on these two points is shown as the upper curve in the figure. It is evident that Eq. (13) fits the entire body of velocity data very satisfactorily. It is believed that this constitutes one test of the validity of Eq. (13), and thus the satisfactory performance of the hot wire anemometer. It is to be noted that for velocities greater than 1 ft/sec, the calibration curve is linear, and Eqs. (1) and (13) predict the same values. However, at velocities lower than this, the curve is no longer linear and the velocities predicted by Eq. (1) are higher than the true values.

Additional calibration data measured in air containing 8.34% water vapor and at 48° C are shown in Fig. 12, where these data are compared with the curve corresponding to Eq. (13). This curve was computed using the constants K_1 and K_2 that were calculated from data measured in air containing 2.29% water vapor and at 22° C. The satisfactory agreement of the data with the calculated curve demonstrates that once

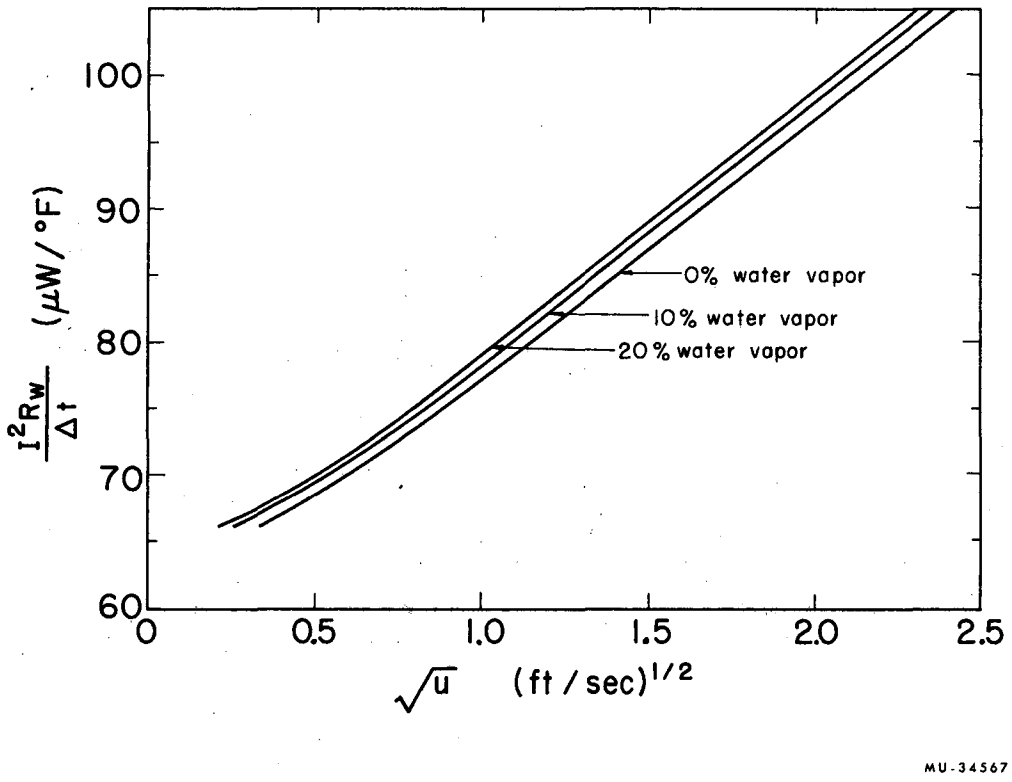

Fig. 10. Effect of water vapor on hot wire anemometer calibration curve for air according to Eq. (13). Wire diameter = 0.00025 in.; wire length = 0.10 in.; wire mean film temperature = 152° C.

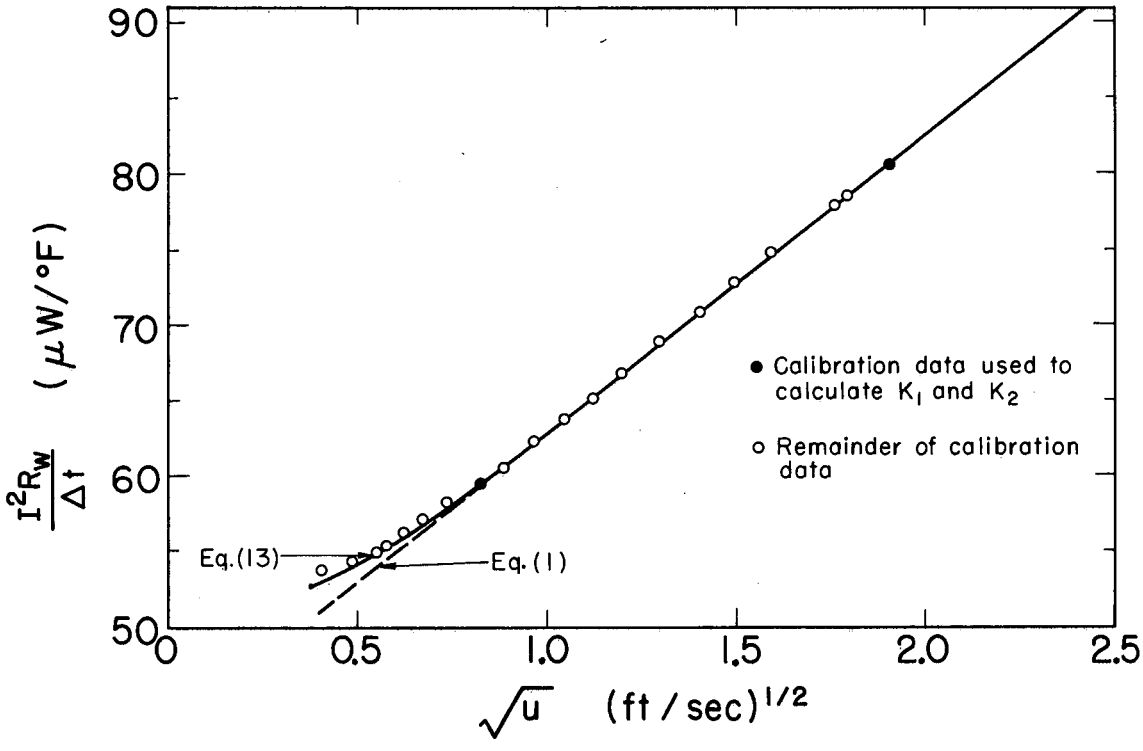

MU-34568

Fig. 11. Comparison of velocity calibration data measured in air with water vapor composition of 2.29% and at 22° C with Eqs. (1) and (13).

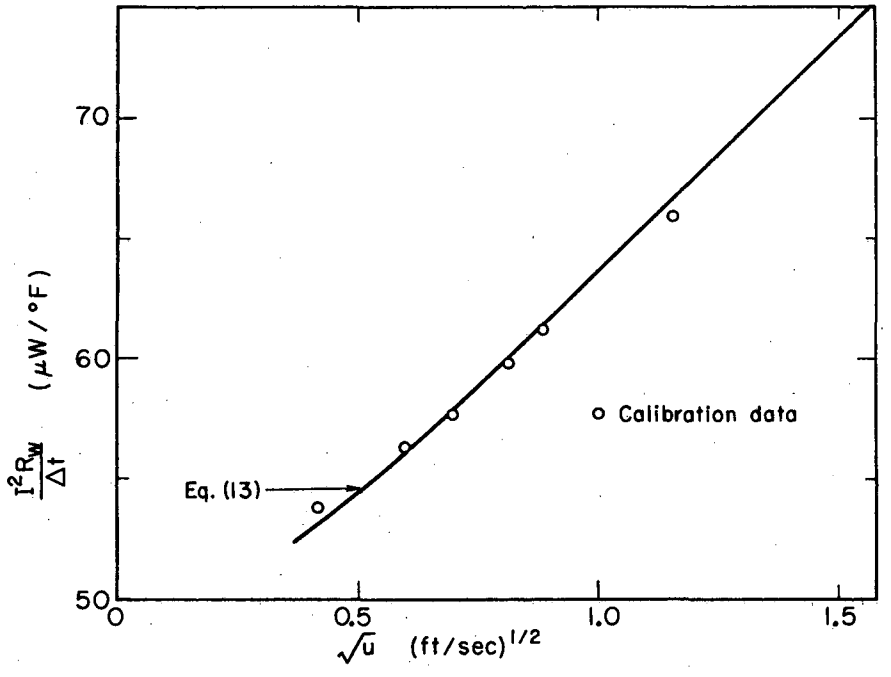

Fig. 12. Comparison of velocity calibration data measured in air containing 8.34% water vapor and at 48° C with Eq. (13).

the wire is calibrated at one convenient set of conditions, the resulting constants may be used to calculate velocities measured in a system having different composition and temperature.

As a further test of the performance of the hot wire anemometer, a velocity profile was measured in the calibration equipment where the flow was known to be fully developed and laminar. The measured profile compares well with the anticipated parabolic profile, as may be seen in Fig. 13. Since velocities as low as 1 ft/sec were measured, it is believed that this test successfully supports the reliability of the hot wire anemometer at low velocities. Having established some confidence in the performance of the hot wire anemometer, several additional tests were performed in conjunction with the experimental equipment to check the performance of this equipment as well as the anemometer.

The ratio of the measured time-averaged velocity to the maximum velocity at the axis of the tube (u/u_{max}) is plotted as a function of the dimensionless distance from the pipe wall, y/r in Fig. 14 for traverses at room temperature with no vaporization and at a Reynolds number of 16,950. All profiles are symmetric about the tube axis. Furthermore, there is no substantial difference between the profile taken upstream of the test section and the profile taken at station II which is three pipe diameters downstream of the first profile. This would indicate that the velocity profile is well developed.

As a further test of the anemometer and performance of the experimental equipment, Reynolds numbers were computed by averaging the velocity profiles taken at station II without mass transfer. Reynolds numbers of 9,500 and 16,950 were obtained in this manner as compared to 9,240 and 16,500 indicated by the orifice meter readings. The small discrepancy between the two may be attributed to experimental errors associated with the readings of the flow meters used in the anemometer calibration and in the experimental equipment. The close agreement between these two independent methods of estimation of Reynolds numbers indicates that air leaks in the experimental equipment are essentially negligible and that the hot wire anemometer calibration is reliable.

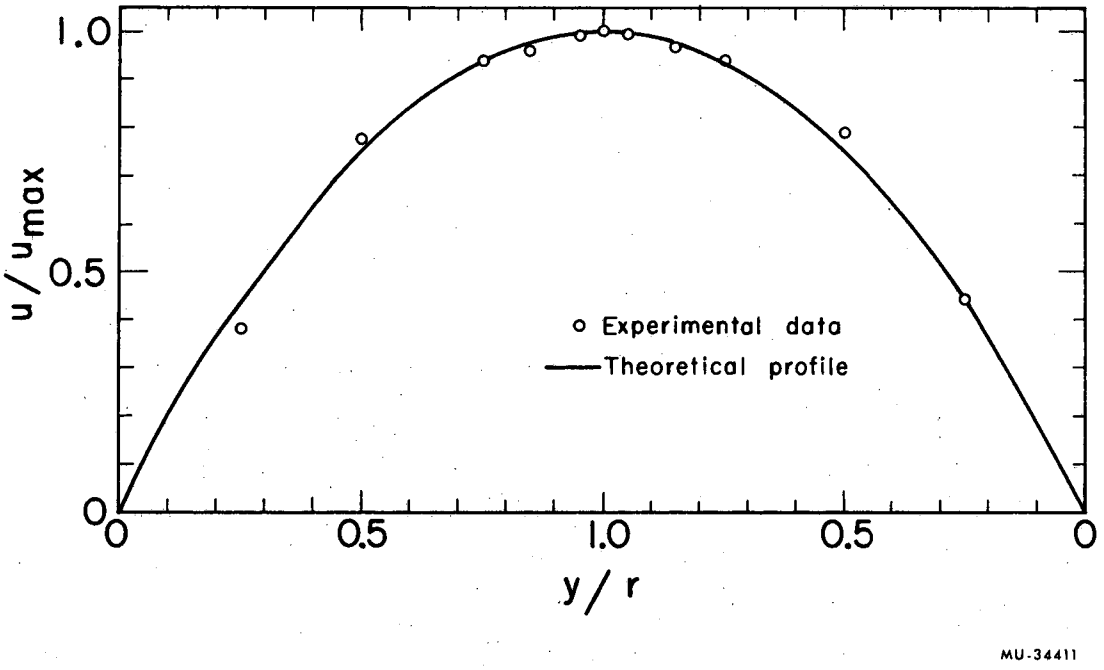

Fig. 13. Velocity profile in hot wire anemometer calibration equipment.

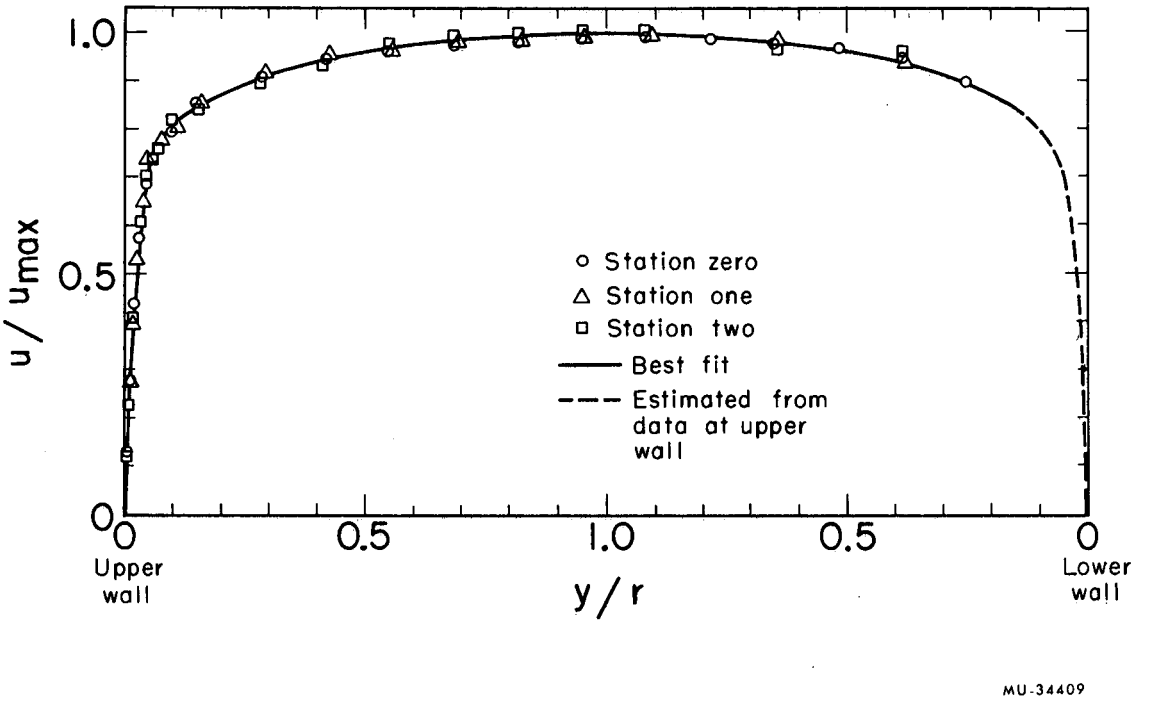

Fig. 14. Comparison of complete velocity profiles measured at stations zero, one, and two at about 25° C and Reynolds number of 16,950 (u_{max} = 5.355 ft/sec).

In order to determine the effects of finite mass transfer rates on the velocity profile, experimental runs were performed at Reynolds numbers of 9,500 and 16,950 at room temperature conditions and Reynolds number of 9,800 at air and water temperatures of about 50° C. Results of these velocity measurements are shown in Tables I, II and III. Results of the calculated mass transfer rates for the experimental runs are summarized in Table IV. The log-mean driving force, $(\Delta p_A)_{\ell m}$ was evaluated by using values of the water vapor composition at the test section inlet and at the designated station. The average mass flux, N_A was calculated by a material balance over the corresponding portion of the test section. The mass flux, at the wall, $(N_A)_W$ was calculated by the diffusion equation, and from this value, the ratio of the interfacial velocity to the maximum velocity, v_W/u_{max} was computed. It is to be noted that the interfacial velocity resulting from the diffusion flux normal to the wall is very much smaller than the minimum point velocity measured in this study.

Velocity profiles measured at room temperature with and without vaporization are compared in Figs. 15 and 16. Since concentration gradients are the greatest in the vicinity of the pipe wall, the velocity distribution in this region is of interest. Fig. 17 shows the velocity profiles in the wall region. It can be seen from these curves that at low vaporization rates, the velocity distribution remains practically unaltered. In the same manner, velocity profiles measured with and without mass transfer are compared in Figs. 18 and 19. These curves clearly indicate that the mass transfer process does not influence the velocity distribution in any significant way.

Values of the dimensionless distance, y^+ and dimensionless velocity, u^+ were calculated for the wall region and are compared with the equation proposed by Wasan, Tien and Wilke[29] in Fig. 20. It will be noted that the data from traverses taken both with and without mass transfer agree well with the proposed theoretical curve, thus indicating that u^+ is a unique function of y^+ under the experimental conditions

Table I. Tabulated velocity profiles measured at a Reynolds number of 9,500 and an approximate air temperature of 25° C.

Station I				Station II			
Dry run		Mass transfer run		dry run		Mass transfer run	
y/r	u/u_{max}	y/r	u/u_{max}	y/r	u/u_{max}	y/r	u/u_{max}
0.0104	0.134	0.0109	0.155	0.0045	0.070	0.0051	0.085
0.0163	0.268	0.0163	0.246	0.0099	0.139	0.0104	0.144
0.0243	0.362	0.0243	0.357	0.0179	0.268	0.0184	0.288
0.0376	0.516	0.0376	0.531	0.0312	0.441	0.0317	0.468
0.0509	0.613	0.0509	0.603	0.0445	0.556	0.0451	0.546
0.0643	0.670	0.0643	0.679	0.0579	0.632	0.0584	0.626
0.0776	0.721	0.0776	0.712	0.0712	0.705	0.0717	0.688
0.1043	0.765	0.1043	0.784	0.0979	0.752	0.0984	0.755
0.1576	0.842	0.1576	0.839	0.1512	0.836	0.1517	0.796
0.2909	0.885	0.2909	0.874	0.2845	0.881	0.2851	0.875
0.4243	0.914	0.4243	0.942	0.4179	0.915	0.4184	0.930
0.5576	0.963	0.5576	0.961	0.5512	0.947	0.5517	0.951
0.6909	0.974	0.6909	0.976	0.6845	0.971	0.6851	0.964
0.8243	0.995	0.8243	0.981	0.8179	0.989	0.8184	0.986
0.9576	0.995	0.9576	1.000	0.9512	0.989	0.9517	0.986

Maximum velocity = u_{max} = 3.143 ft/sec

Table II. Tabulated velocity profiles measured at a Reynolds number of 16,950 and an approximate air temperature of 25° C.

Station I				Station II			
Dry run		Mass transfer run		Dry run		Mass transfer run	
y/r	u/u_{max}	y/r	u/u_{max}	y/r	u/u_{max}	y/r	u/u_{max}
0.0104	0.274	0.0109	0.198	0.0045	0.120	0.0051	0.162
0.0163	0.390	0.0163	0.372	0.0099	0.223	0.0104	0.235
0.0243	0.531	0.0243	0.490	0.0179	0.405	0.0184	0.436
0.0736	0.657	0.0376	0.636	0.0312	0.603	0.0317	0.639
0.0509	0.732	0.0509	0.721	0.0445	0.699	0.0451	0.685
0.0643	0.748	0.0643	0.742	0.0579	0.726	0.0584	0.720
0.0776	0.777	0.0776	0.762	0.0712	0.757	0.0717	0.750
0.1043	0.810	0.1043	0.803	0.0979	0.818	0.0984	0.802
0.1576	0.842	0.1576	0.831	0.1512	0.849	0.1517	0.840
0.2909	0.885	0.2909	0.887	0.2845	0.896	0.2851	0.925
0.4243	0.914	0.4243	0.938	0.4179	0.931	0.4184	0.935
0.5576	0.963	0.5576	0.959	0.5512	0.975	0.5517	0.980
0.6909	0.974	0.6909	0.972	0.6845	0.990	0.6851	0.991
0.8243	0.995	0.8243	0.982	0.8179	0.995	0.8184	0.999
0.9576	0.995	0.9576	0.986	0.9512	1.000	0.9517	0.999

Maximum velocity = u_{max} = 5.355 ft/sec

Table III. Tabulated velocity profiles measured at a Reynolds number of 9,800 and an approximate air temperature of 50° C.

y/r	Dry Run u/u_{max}	Mass transfer run u/u_{max}
0.0069	0.113	0.155
0.0123	0.191	0.194
0.0203	0.310	0.320
0.0336	0.518	0.496
0.0469	0.654	0.629
0.0603	0.702	0.688
0.0736	0.795	0.744
0.1003	0.839	0.827
0.1536	0.895	0.878
0.2869	0.956	0.931
0.4203	0.983	0.960
0.5536	0.998	0.977
0.6869	1.000	0.977
0.9536	0.998	0.972

Maximum velocity = u_{max} = 3.611 ft/sec

Table IV. Summary of calculated mass transfer rates.

Run no.	Station no.	Reynolds no. Re	Log-mean[a] driving force (mm. Hg) $\Delta P_{\ell m}$	Average[a] mass flux (g.moles/cm^{2}sec × 10^6) N_A	Mass flux at the wall N_{A_W}	$v_W/u_{max} \times 10^4$
W-2	I	9,500	12.42	1.985	1.285	3.39
W-2	II	9,500	12.16	0.521	0.430	1.14
W-3	I	16,950	10.61	1.060	0.960	1.49
W-3	II	16,950	10.42	0.442	0.351	0.54
W-4	II	9,800	70.51	5.220	2.120	5.24

[a]Average taken between test section inlet and corresponding station.

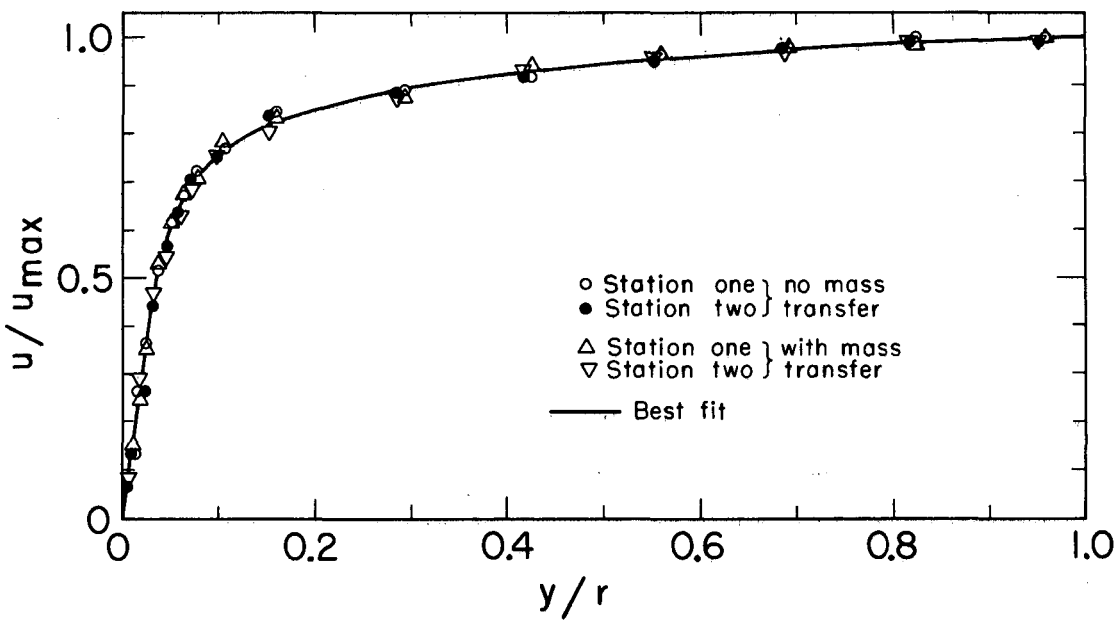

MU-34410

Fig. 15. Comparison of velocity profiles measured with and without mass transfer at about 25° C and Reynolds number of 9,500 (u_{max} = 3.143 ft/sec).

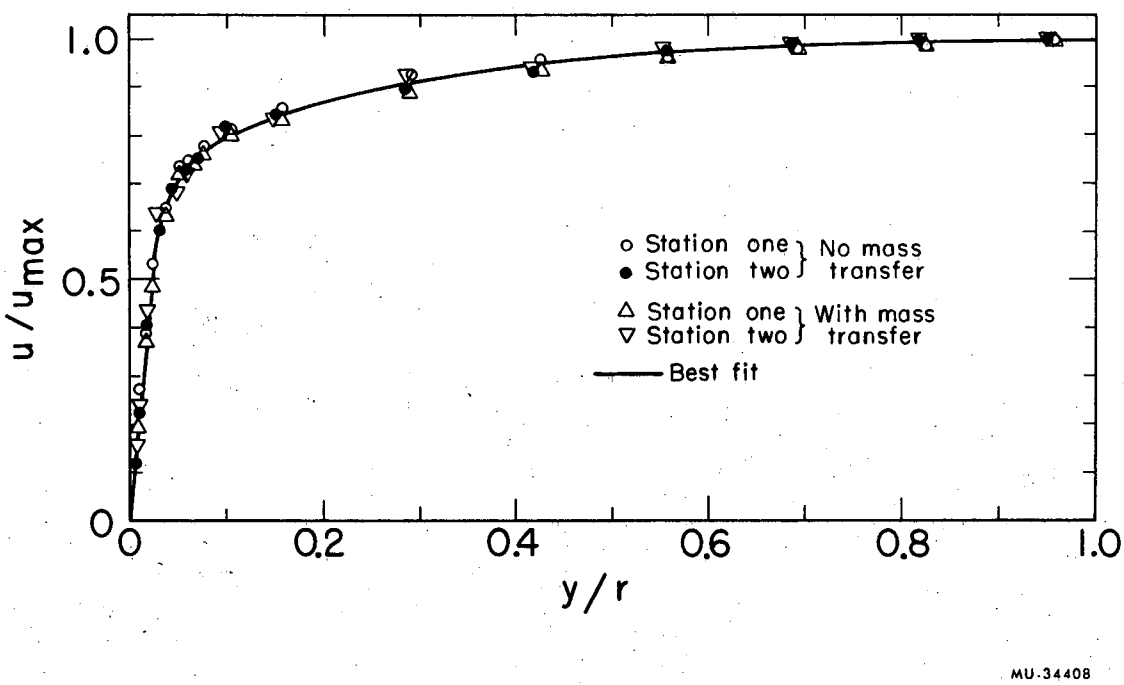

Fig. 16. Comparison of velocity profiles measured with and without mass transfer at about 25° C and Reynolds number of 16,950 (u_{max} = 5.355 ft/sec).

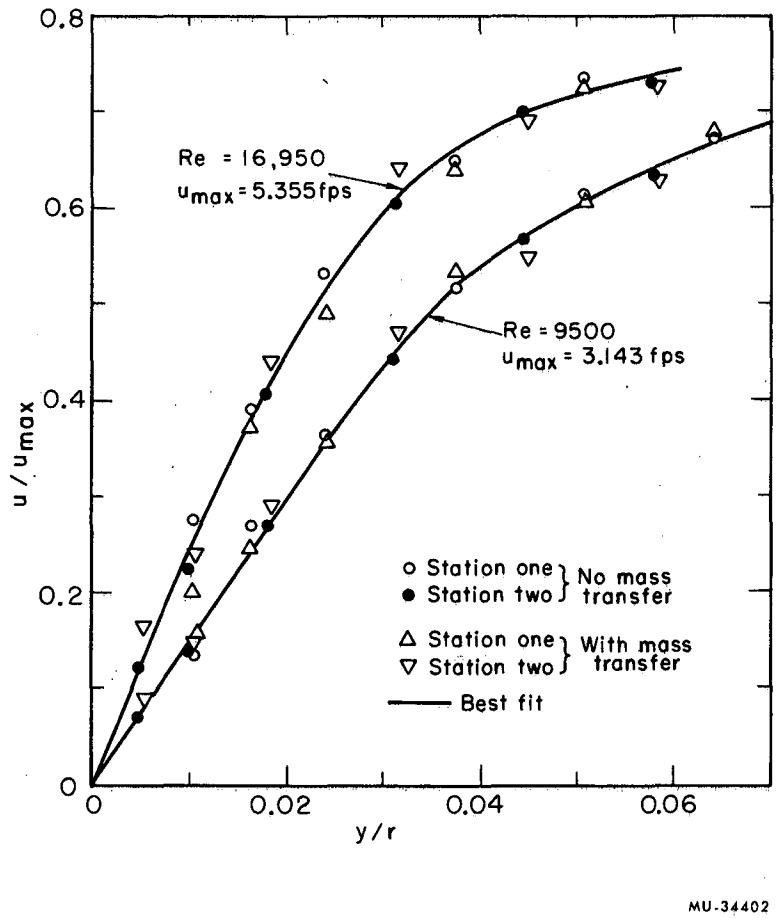

Fig. 17. Comparison of velocity profiles measured in the wall region with and without mass transfer at about 25° C.

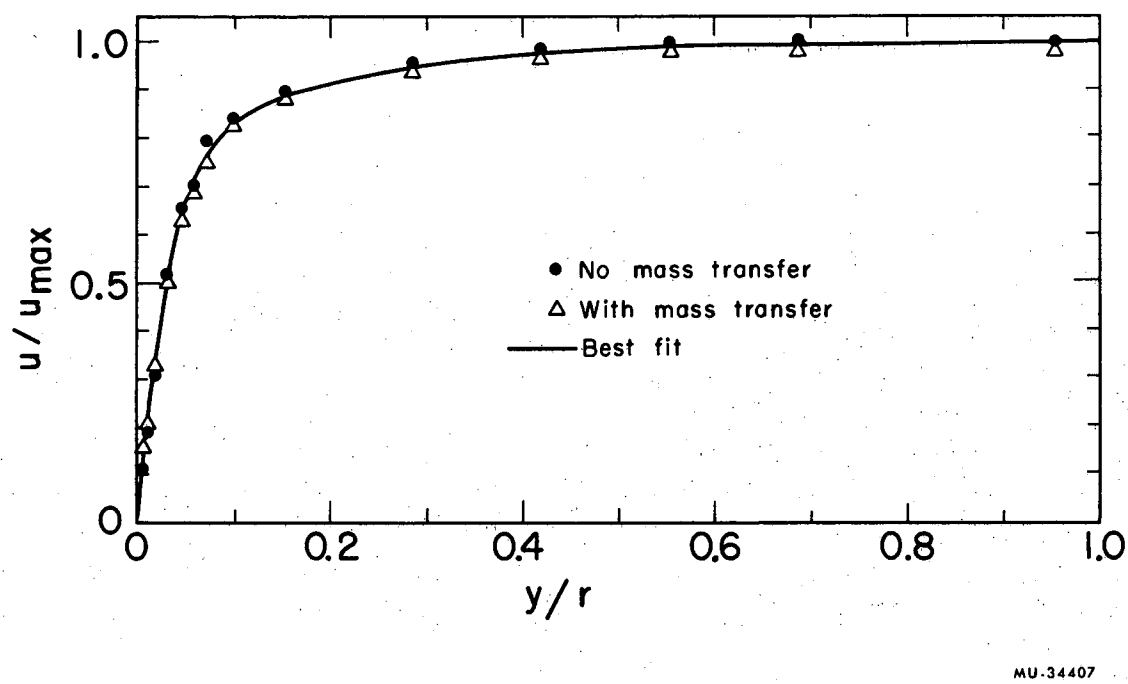

Fig. 18. Comparison of velocity profiles measured with and without mass transfer at about 50° C and a Reynolds number of 9,800 (u_{max} = 3.611 ft/sec).

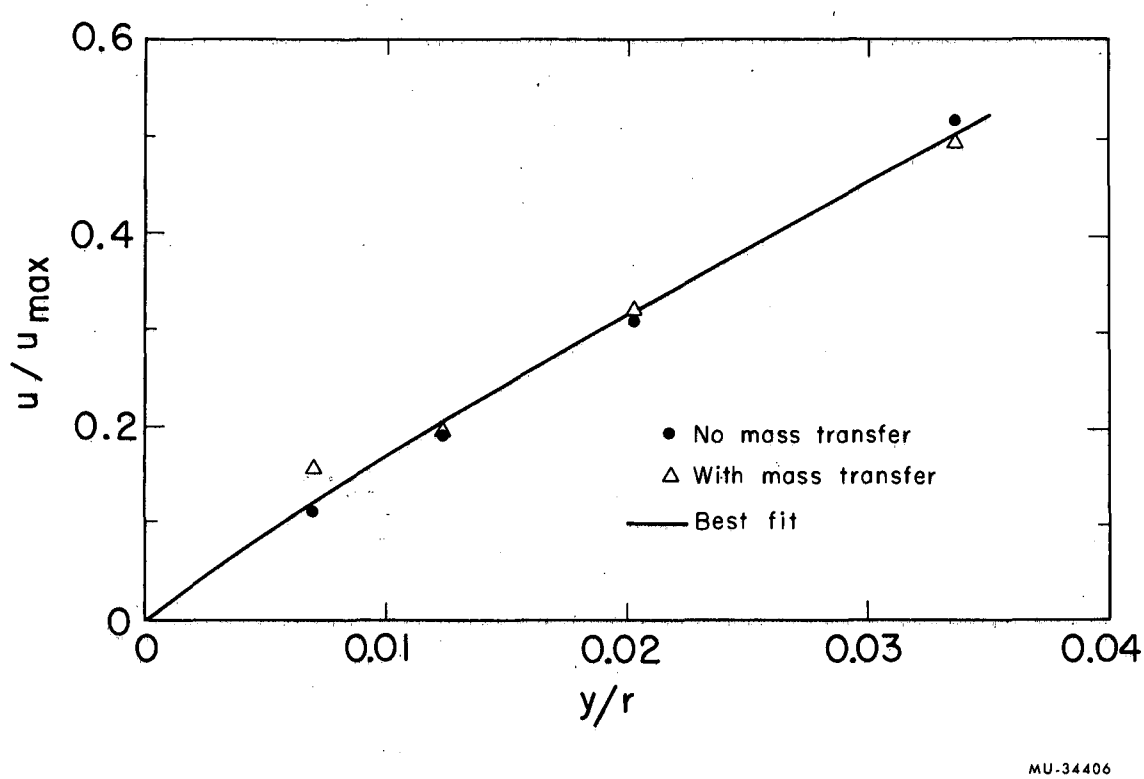

Fig. 19. Comparison of velocity profiles measured in the wall region with and without mass transfer at about 50° C and Reynolds number of 9,800 (u_{max} = 3.611 ft/sec).

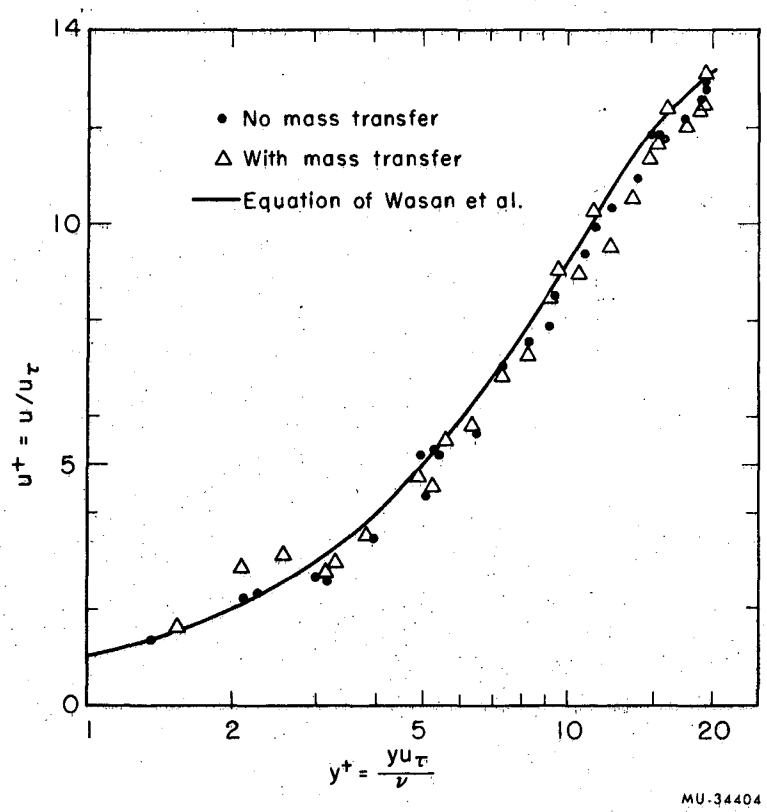

Fig. 20. Comparison of experimental data measured near the pipe wall with a proposed universal velocity distribution for turbulent flow in a pipe.

encountered. It is further noted that velocities were measured at distances as low as about y^+ of 1.0. This indicates the advantage of using a test section of large diameter.

A further test of the validity of the experimental data was made by calculating the Fanning friction factors at Reynolds numbers of 9,500, 9,800 and 16,950. Since velocity readings were made at values of y^+ as low as 1.0, it was possible to accurately estimate the velocity gradient at the pipe wall, and thus the shear stress at the wall. The friction factors were then determined using the calculated values of the shear stress at the wall and the bulk velocity of the gas stream. These values compare well with the curve representing the Blasius equation for a smooth pipe, as may be seen in Fig. 21. The close agreement observed between calculated and experimental values demonstrates the reliability of hot wire anemometry at the low velocities encountered in this study.

In addition to velocity profiles, the time-averaged temperature distributions corresponding to the velocity profiles were measured at room temperature and Reynolds numbers of 9,500 and 16,950 and at air and water temperatures of about 50° C and Reynolds number of 9,800.

A typical temperature profile measured under isothermal conditions at room temperature is seen in Fig. 22. Since the air temperature is the same as the water temperature, the resulting air temperature profile is flat. Figure 23 shows another profile. In this case, air entered the test section at a temperature slightly higher than the water temperature, and as a result, a small amount of heat was lost to the pipe walls by forced convection. Since the temperature could only be read to plus or minus 0.125° C some uncertainty in the precise shape of temperature profile exists due to the very small difference in temperature between the water and air.

The temperature profile measured at 50° C is shown in Fig. 24. It is found that this profile is somewhat peculiar in shape in comparison to those measured at room temperatures. This may be explained in the

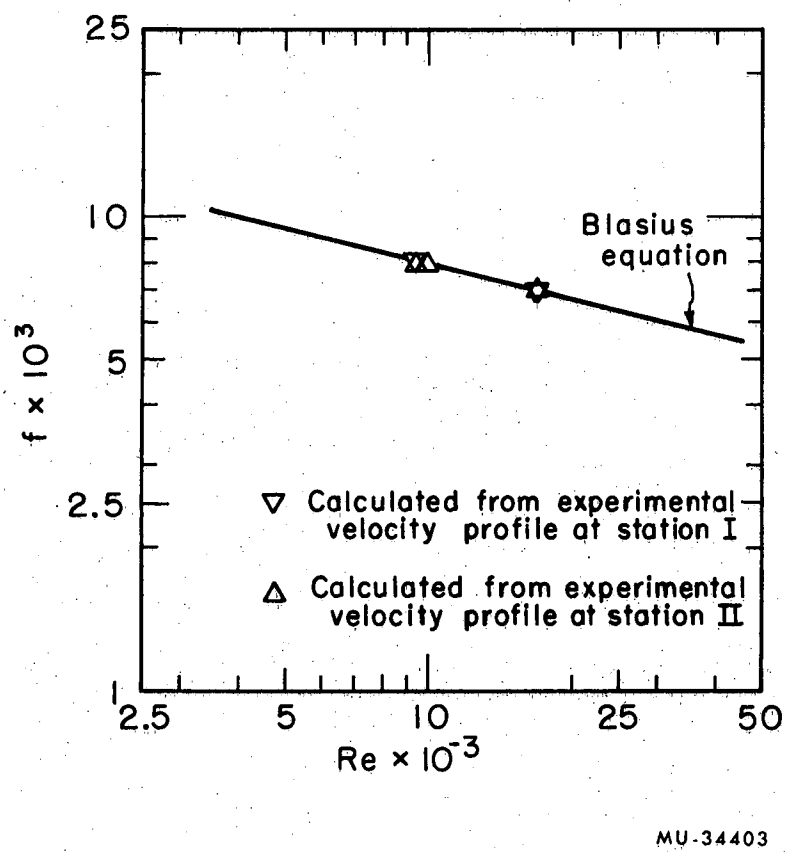

Fig. 21. Fluid friction in experimental apparatus.

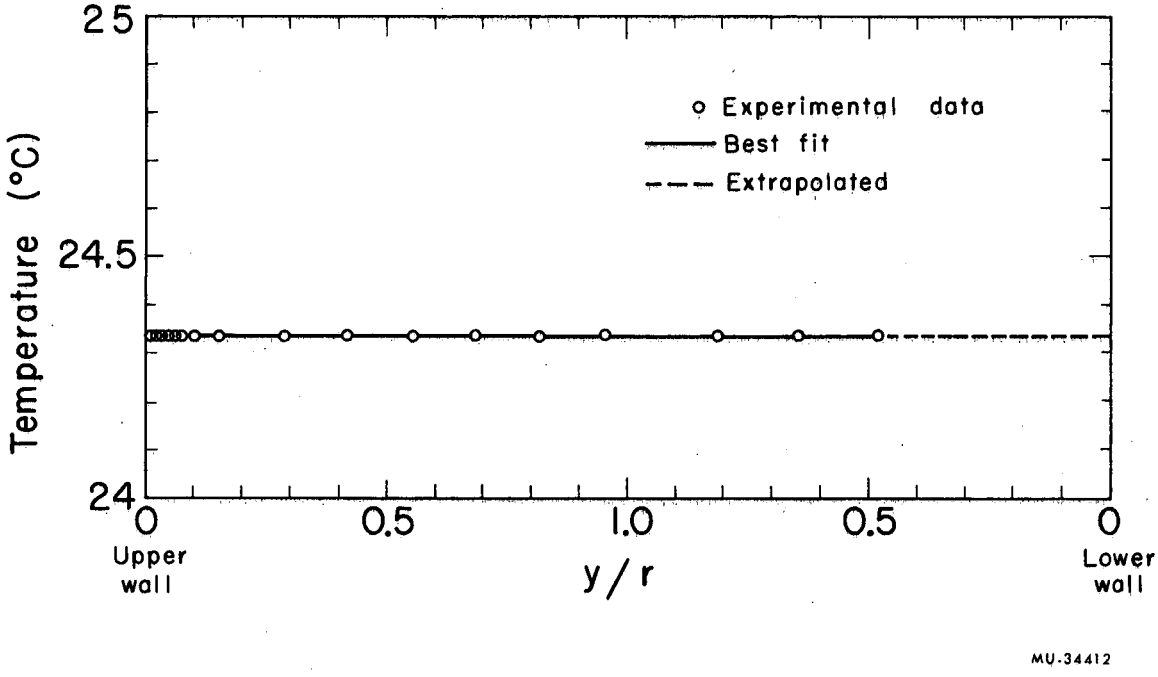

Fig. 22. Temperature profile at Reynolds number of 9,500. Test section inlet water temperature is 24.6° C, outlet water temperature is 24.2° C (Run W-2-2).

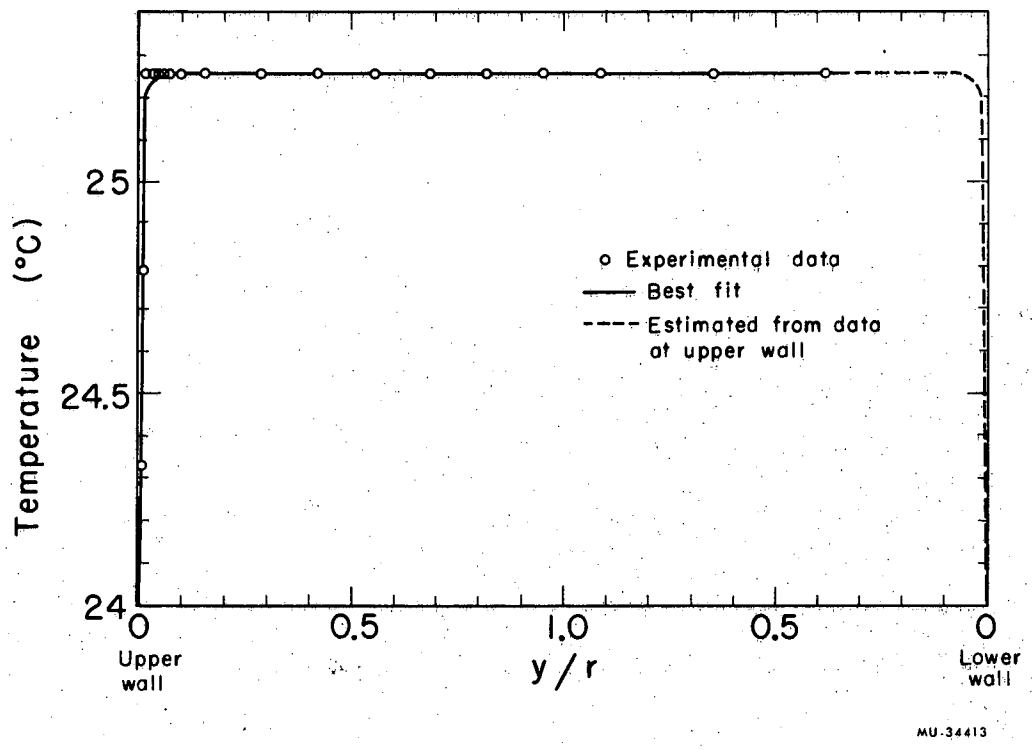

Fig. 23. Temperature profile measured at Reynolds number of 16,950. Test section inlet water temperature is 24.5° C, outlet water temperature is 24.1° C (Run W-3-2).

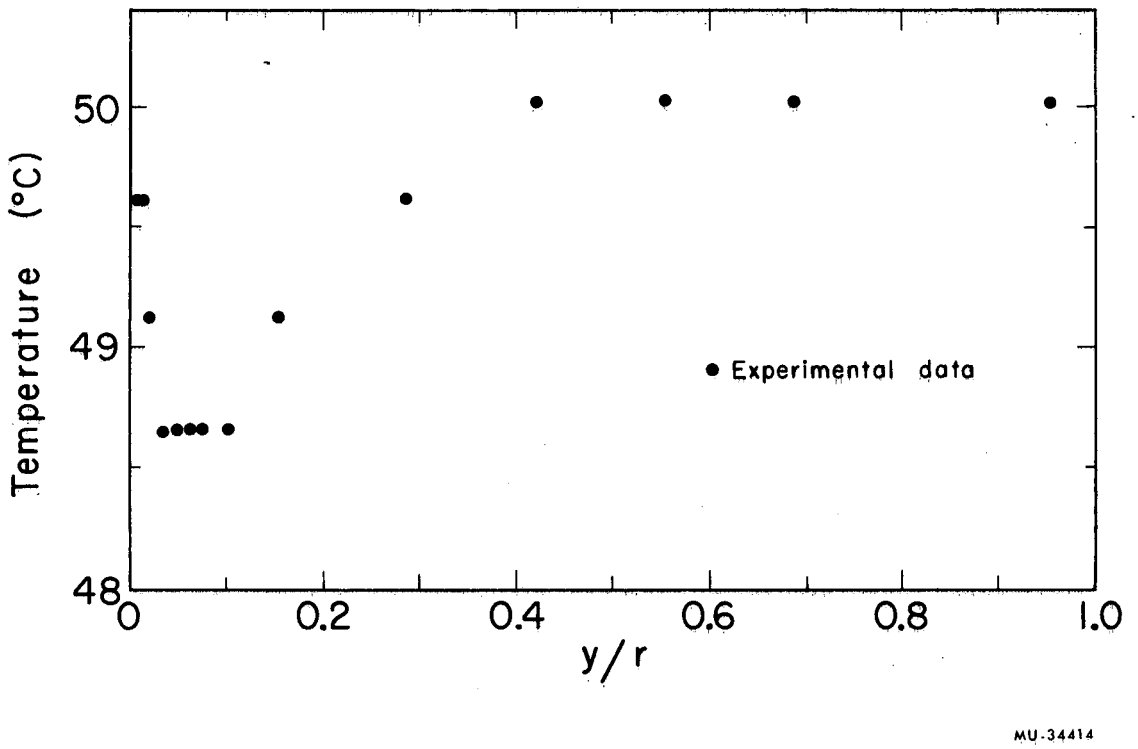

Fig. 24. Temperature profile measured at Reynolds number of 9,800. Test section inlet water temperature is 50.4° C, outlet water temperature is 24.1° C (Run W-4-2).

following manner. In this run, the air entered the test section at a temperature of 48.7° C, while the water entered at 50.4° C and left at 49.8° C. As a result, at the beginning of the run, a small amount of heat was being transferred from the liquid to the gas. During the course of the experiment, which lasted approximately two hours, the temperature of the incoming air increased by a degree and a half, thus bringing it slightly above the temperature of the wall.

VII. CONCLUSIONS

In this study, the hot wire anemometry technique was extended to apply to the measurement of low velocities of gases in a field of variable composition and temperature. Results of the present analysis show that variation in composition and the effects of natural convection must be accounted for in the interpretation of the velocity data. Close agreement between the velocities calculated from Eq. (13) and the actual velocities in known parabolic flow fields established confidence in the hot wire technique for measuring low velocities. Satisfactory performance of the experimental equipment and hot wire anemometer was further substantiated by the fact that Reynolds numbers calculated from the averaged velocity profiles agreed well with those determined from orifice meter readings.

Comparison of velocity profiles measured with and without vaporization indicated that the velocity distributions remained unaffected under the conditions of moderate mass transfer rates. Values of dimensionless distance (y^+) and velocity (u^+) determined from profiles measured with and without vaporization compared well with those calculated from the universal velocity distribution for the wall region proposed by Wasan, Tien and Wilke. Furthermore, friction factors calculated from the velocity gradients at the pipe wall were in good agreement with those predicted by the Blasius equation.

ACKNOWLEDGMENTS

We are grateful to Mr. L. R. Lucas, Mr. E. H. Hoyer and Mr. V. F. Hubal of the Radiation Laboratory Mechanical Engineering Department for their helpful suggestions regarding the design of the experimental equipment. Thanks are due to Mr. F. Vogelsberg of the Electronic Support Group for his assistance in the design of the hot wire anemometer bridge. We would also like to thank Mr. P. R. Rony for his assistance in the measurement of several velocity profiles with a pitot tube. The help and suggestions of the personnel of the Mechanical Shop (Building 70), especially Mr. G. G. Young in the construction of the experimental equipment is greatly appreciated.

This work was performed under the auspices of the U. S. Atomic Energy Commission.

NOTATION

a	constant appearing in King's equation (Eq. (1))	
A	surface area of a cylinder available for heat transfer	(ft^2)
b	constant appearing in King's equation (Eq. (1))	
c	constant appearing in Eq. (16)	($^\circ$ C)
C_p	specific heat	(Btu/hr $^\circ$ F)
D	diameter	(ft)
f	Fanning friction factor	
g	acceleration due to gravity	(lb./ft^2)
g_c	conversion constant	$\frac{\text{ft-lb.}}{\text{lb.-force sec}}$
h	heat transfer coefficient	(Btu/hr ft^2 $^\circ$ F)
H	height of manometer fluid	(in.)
I	electrical current flowing through wire	(mA)
k	thermal conductivity	(Btu/hr ft $^\circ$ F)
K_1, K_2	constants appearing in Eq. (13)	
L	length of wire	(ft)
m	constant appearing in Eq. (16)	($^\circ$ C/ohm)
N_A	mass flux of diffusing species	(g.moles/cm^2sec)
p_A	vapor pressure of diffusing species	(mm. Hg)
r	pipe radius	(ft)
R	wire resistance	(ohms)
t	temperature	($^\circ$ F or $^\circ$ C)
u	fluid velocity	(ft/sec)
u_τ	friction velocity = $\sqrt{\tau_w g_c/\rho}$	(ft/sec)
v	radial velocity	(ft/sec)
y	distance from pipe wall	(ft)
Y	orifice gas expansion factor	

Greek Letters

α'	orifice temperature correction factor
β'	coefficient of expansion of gas

ϵ	energy conversion factor	(μW-hr/Btu)
κ	orifice discharge coefficient	
μ	fluid viscosity	(lb./ft hr)
ν	kinematic viscosity	(ft^2/hr)
ρ	fluid density	(lb./ft^3)
τ	shear stress	(lb./ft^2)

Dimensionless Groups

Gr	Grashof number	$(g\rho^2 D^3 \beta' \Delta t/\mu^2)$
Nu	Nusselt number	(hD/k)
Pr	Prandtl number	$(C_p \mu/k)$
Re	Reynolds number	$(Du\rho/\mu)$
u^+	dimensionless velocity	(u/u_τ)
y^+	dimensionless distance	(yu_τ/ν)

Subscripts

a	air
f	mean (arithmetic) film
fo	forced convection
ℓm	log mean
max	maximum
n	natural convection
o	orifice
r	radiation
t	total of natural, forced convection and radiation
w	wire
W	wall

APPENDICES

A. Orifice and Hot Wire Anemometer Calibration Data

1. Orifice Calibration Data

Values of discharge coefficients for the 1.625 and 2.115-in. orifices were calculated from data tabulated by Stearns et al.[26] for orifice Reynolds numbers greater than 10,000, and are shown graphically in Fig. 25. Two points were checked experimentally in the range of interest using water rather than air, as suggested by Linford[14] and were found to compare well with the curves drawn in Fig. 25. The experimental data for the water calibration are compared with the published values of the discharge coefficient in Table V below.

Table V. Comparison of published and experimental discharge coefficients for water flow through a 1.625-in. diameter orifice in a 3-in. diameter pipe.

Orifice Reynolds number	Discharge coefficient Experimental	Discharge coefficient Stearns et al.[26]
16,570	0.659	0.659
18,410	0.652	0.657

It was necessary to calibrate the 0.2508-in. diameter orifice with a wet-test meter since there was no published data available for the anticipated Reynolds number range of 500 to 10,000. The results of this calibration are shown in Fig. 26, where discharge coefficient is plotted as a function of Reynolds number. The unusual shape of this curve agrees with the approximate curve for the same orifice to pipe-diameter ratio plotted in Stearns et al.[26]

2. Resistance Thermometer Temperature Calibration Data

Calibration data for wires two and three are listed in Tables VI and VII below. A least squares analysis of this data indicated that the

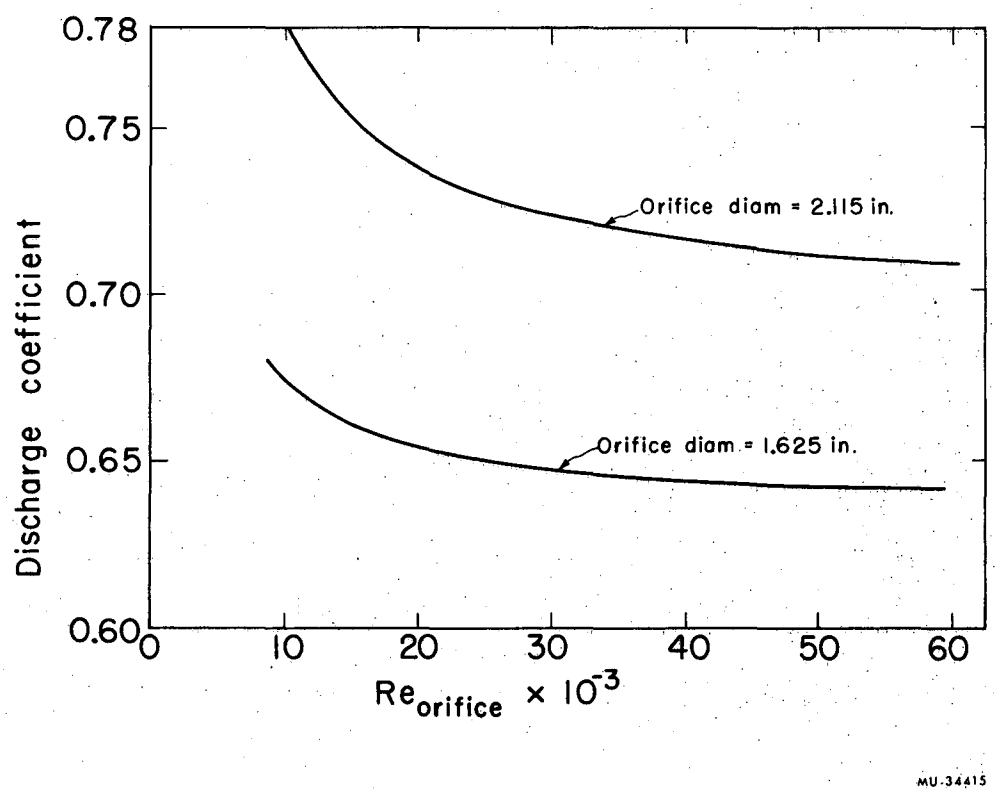

Fig. 25. Published discharge-coefficient curves for 1.625- and 2.115-in. orifices installed a 3-in. pipe with flange taps (Ref. 26).

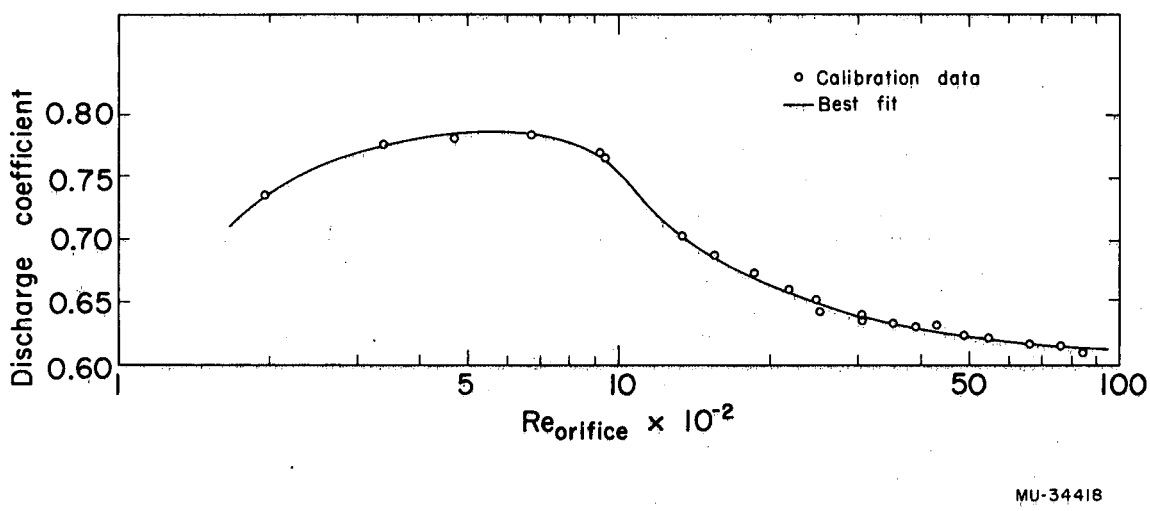

Fig. 26. Discharge-coefficient curve for orifice installed in hot wire anemometer calibration equipment.

Table VI. Resistance thermometer calibration data for wire number two.

Thermocouple emf (mV)	Wire temperature (^{o} C)	Wire resistance (Ω)
1.23	24.10	6.94
1.64	31.99	7.10
2.36	45.75	7.40
2.87	55.39	7.62
3.88	74.31	8.01
5.02	95.37	8.47
6.92	130.31	9.23

Table VII. Resistance thermometer calibration data for wire number three.

Thermocouple emf (mV)	Wire temperature (° C)	Wire resistance (Ω)
1.12	22.00	7.03
2.02	39.20	7.40
2.71	52.38	7.67
3.63	69.87	8.03
4.38	83.53	8.33
5.36	101.62	8.69

Table VIII. Results of resistance thermometer calibration.

Wire number	Slope (m) (° C/Ω)	y-intercept (c) (° C)
2	46.35	-297.35
3	48.31	-318.04

values of the slope and y-intercept are as shown in Table VIII. The experimental points as well as the best-fit lines for the two calibrations are shown in Fig. 27.

The linearity between resistivity (thus resistance) and temperature of platinum over a 300° C temperature range is shown in Fig. 28.

3. Hot Wire Anemometer—Velocity Calibration Data

Before wires two and three were calibrated, a velocity profile was measured in the calibration equipment to test the performance of the instrument. Measurements and results are listed in Table IX. The profile is shown in Fig. 13.

Experimental data from the hot wire anemometer velocity calibration are listed in Tables X A and X B. In addition, an indication of the closeness of fit to Eq. (13) is given by comparison of the two columns headed "experimental and calculated velocity" (the former meaning the velocity indicated by the orifice meter, and the latter implying the velocity calculated from Eq. (13) using the least-squares values of the equation constants K_1 and K_2). The values of the equation constants for wires number two and three determined by calibration are compared with those calculated from Eqs. (14) and (15) in Table XI. The agreement between the experimental and calculated values of K_1 and K_2 is believed to be satisfactory and well within the limits of uncertainty involved in the heat transfer correlations and property values used in the theoretical equations.

B. Experimental Results

A total of 12 velocity profiles were measured. A summary of the overall flow information appears in Table XII. The data used to calculate dimensionless distance (y/r) and velocity as well as the resulting values of y/r and u are listed in Tables XIII A to L. Velocities corrected for the wall effect are listed in Table XIII M; correction curves used in these calculations are seen in Fig. 29. Values of dimensionless distance, y^+ and dimensionless velocity, u^+ plotted in Fig. 20 are tabulated in Table XV.

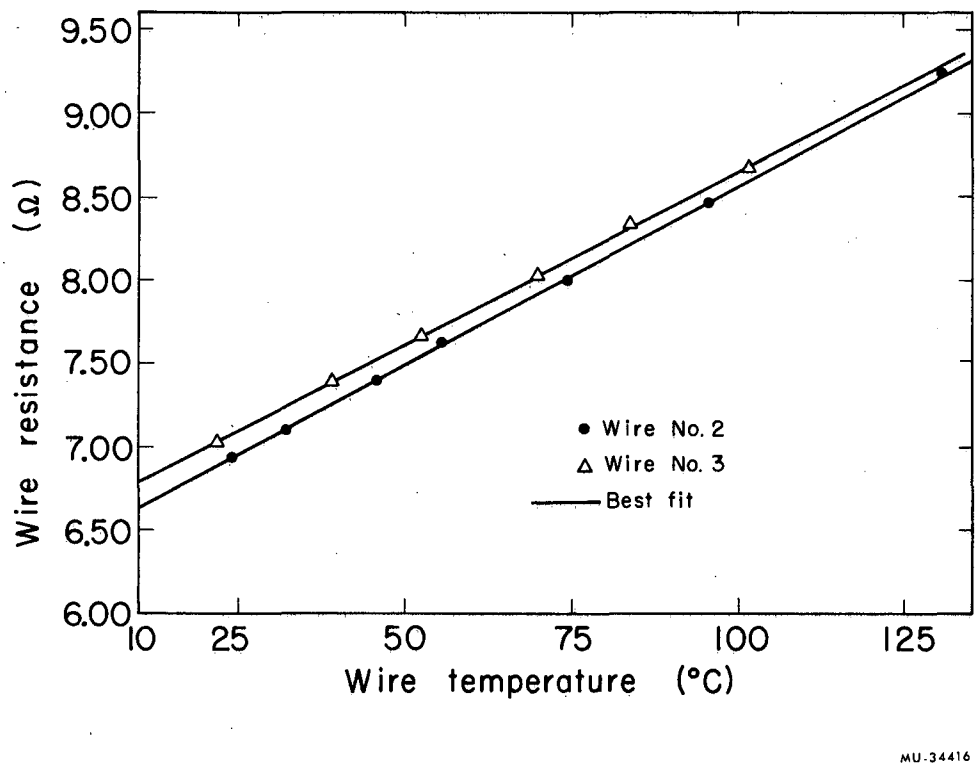

Fig. 27. Resistance thermometer calibration curves.

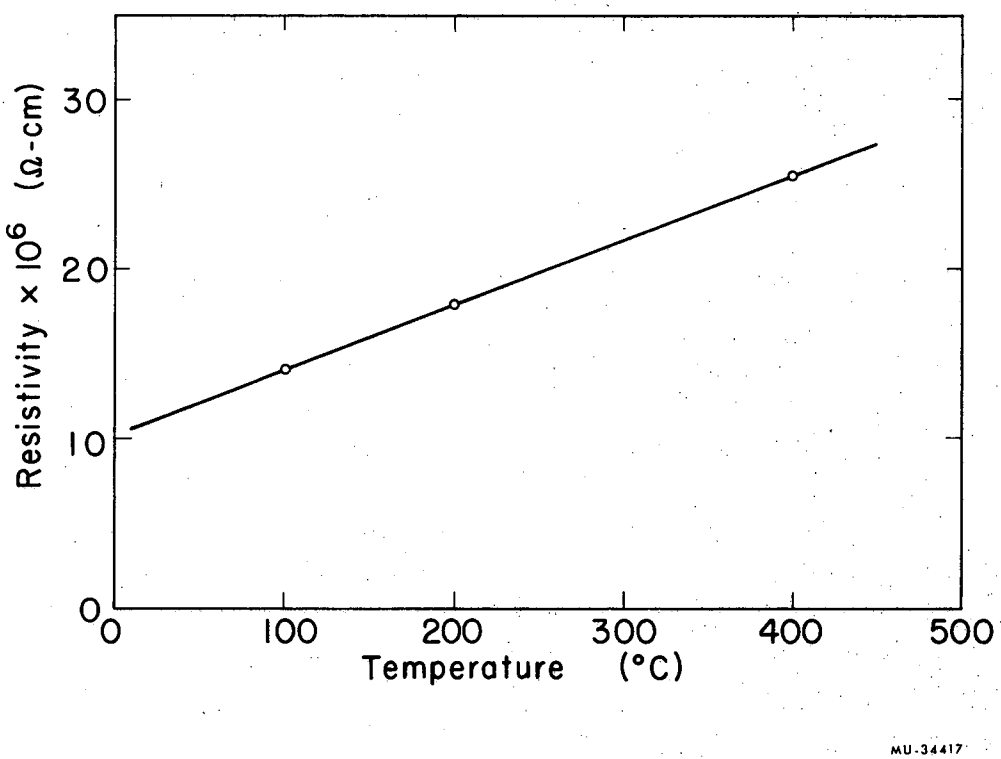

Fig. 28. Linearity of resistivity of platinum with temperature (Ref. 9).

Table IX. Data and results of velocity profile measured in calibration equipment at a maximum velocity of 2.36 ft/sec.

Wire current (mA)	Distance from upper wall (in.)	Wire resistance Hot (Ω)	Wire resistance Cold (Ω)	u/u_{max}
47.468	0.250	14.00	8.42	0.382
49.690	0.500	14.00	8.42	0.779
50.507	0.750	14.00	8.42	0.940
50.620	0.850	14.00	8.42	0.962
50.760	0.950	14.00	8.42	0.991
50.806	1.000	14.00	8.42	1.000
50.764	1.050	14.00	8.42	0.992
50.655	1.115	14.00	8.42	0.969
50.512	1.250	14.00	8.42	0.941
49.772	1.500	14.00	8.42	0.790
47.821	1.750	14.00	8.42	0.441

Table X A

RESULTS OF HOT WIRE ANEMOMETER VELOCITY CALIBRATION

WIRE NUMBER 2 CALIBRATION PERFORMED JUN 14

INPUT DATA

READING NUMBER	WIRE CURRENT (M.AMP)	WIRE RESISTANCE (OHMS)	AIR RESISTANCE (OHMS)	WATER VAPOR PRESSURE (MM.HG.)	TOTAL PRESSURE (MM.HG.)	ORIFICE TOTAL PRESSURE (MM.HG.)	ORIFICE MANOMETER READING (IN.H2O)	ORIFICE AIR TEMPERATURE (F)
1	58.8160	13.000	6.910	16.00	743.70	768.330	13.3000	71.60
2	58.5370	13.000	6.910	16.00	743.70	765.830	11.9500	71.60
3	57.2000	13.000	6.910	16.00	743.70	758.665	8.1000	71.60
4	55.9720	13.000	6.910	16.00	743.70	753.888	5.5100	71.60
5	55.3090	13.000	6.910	16.00	743.70	751.761	4.4000	71.60
6	54.9650	13.000	6.910	16.00	743.70	750.921	3.9100	71.60
7	54.1010	13.000	6.910	16.00	743.70	748.850	2.8200	71.60
8	53.6010	13.000	6.910	16.00	743.70	747.861	2.3200	71.60
9	53.1590	13.000	6.910	16.00	743.70	747.320	1.9700	71.60
10	52.6490	13.000	6.910	16.00	743.70	746.648	1.6000	71.60
11	52.1030	13.000	6.910	16.00	743.70	745.939	1.2300	71.60
12	51.4880	13.000	6.910	16.00	743.70	745.398	0.9250	71.60
13	51.0320	13.000	6.910	16.00	743.70	745.062	0.7300	71.60
14	50.3450	13.000	6.910	16.00	743.70	744.614	0.4900	71.60
15	49.6910	13.000	6.910	16.00	743.70	744.260	0.3000	71.60
16	49.4850	13.000	6.910	16.00	743.70	744.166	0.2500	71.60
17	49.0500	13.000	6.910	16.00	743.70	744.017	0.1700	71.60
18	48.4830	13.000	6.910	16.00	743.70	743.887	0.1000	71.60
19	48.1170	13.000	6.910	16.00	743.70	743.831	0.0700	71.60
20	47.8590	13.000	6.910	16.00	743.70	743.793	0.0500	71.60
21	46.9250	13.000	6.910	16.00	743.70	743.737	0.0200	71.60
22	46.4650	13.000	6.910	16.00	743.70	743.719	0.0100	71.60

CALIBRATION CHECKOUT - COMPARISON OF EXPERIMENTAL AND CALCULATED VELOCITY

READING NUMBER	AIR TEMPERATURE AT PROBE (F)	AIR TEMPERATURE AT WIRE FILM (F)	WATER COMPOSITION (MOL.PC.)	EXPERIMENTAL VELOCITY (FT/SEC)	CALCULATED VELOCITY (FT/SEC)
1	73.29	327.34	2.15	4.7103	4.6914
2	73.29	327.34	2.15	4.4626	4.5103
3	73.29	327.34	2.15	3.6689	3.7015
4	73.29	327.34	2.15	3.0233	3.0413
5	73.29	327.34	2.15	2.7139	2.7163
6	73.29	327.34	2.15	2.5665	2.5561
7	73.29	327.34	2.15	2.1967	2.1784
8	73.29	327.34	2.15	2.0018	1.9754
9	73.29	327.34	2.15	1.8505	1.8054
10	73.29	327.34	2.15	1.6269	1.6197
11	73.29	327.34	2.15	1.4737	1.4333
12	73.29	327.34	2.15	1.2840	1.2382
13	73.29	327.34	2.15	1.1461	1.1033
14	73.29	327.34	2.15	0.9464	0.9157
15	73.29	327.34	2.15	0.7311	0.7537
16	73.29	327.34	2.15	0.6770	0.7060
17	73.29	327.34	2.15	0.5741	0.6103
18	73.29	327.34	2.15	0.4579	0.4956
19	73.29	327.34	2.15	0.3899	0.4274
20	73.29	327.34	2.15	0.3362	0.3822
21	73.29	327.34	2.15	0.2326	0.2365
22	73.29	327.34	2.15	0.1670	0.1750

Table X B

RESULTS OF HOT WIRE ANEMOMETER VELOCITY CALIBRATION

WIRE NUMBER 3 CALIBRATION PERFORMED JUN 25

INPUT DATA

READING NUMBER	WIRE CURRENT (M.AMP)	WIRE RESISTANCE (OHMS)	AIR RESISTANCE (OHMS)	WATER VAPOR PRESSURE (MM.HG.)	TOTAL PRESSURE (MM.HG.)	ORIFICE TOTAL PRESSURE (MM.HG.)	ORIFICE MANOMETER READING (IN.H2O)	ORIFICE AIR TEMPERATURE (F)
1	56.6920	13.000	7.040	17.00	743.20	758.034	8.0200	73.40
2	55.9790	13.000	7.040	17.00	743.20	754.750	6.2500	73.40
3	55.7290	13.000	7.040	17.00	743.20	753.985	5.8400	73.40
4	54.5800	13.000	7.040	17.00	743.20	750.328	3.8500	73.40
5	53.8420	13.000	7.040	17.00	743.20	748.648	2.9500	73.40
6	53.1700	13.000	7.040	17.00	743.20	747.380	2.2600	73.40
7	52.3800	13.000	7.040	17.00	743.20	746.185	1.6300	73.40
8	51.5740	13.000	7.040	17.00	743.20	745.346	1.1700	73.40
9	50.9900	13.000	7.040	17.00	743.20	744.861	0.9000	73.40
10	50.4380	13.000	7.040	17.00	743.20	744.431	0.6700	73.40
11	49.8020	13.000	7.040	17.00	743.20	744.096	0.4800	73.40
12	49.1780	13.000	7.040	17.00	743.20	743.853	0.3500	73.40
13	48.7650	13.000	7.040	17.00	743.20	743.666	0.2500	73.40
14	48.2290	13.000	7.040	17.00	743.20	743.480	0.1500	73.40
15	47.7520	13.000	7.040	17.00	743.20	743.387	0.1000	73.40
16	47.3730	13.000	7.040	17.00	743.20	743.331	0.0700	73.40
17	47.0350	13.000	7.040	17.00	743.20	743.293	0.0500	73.40
18	46.8690	13.000	7.040	17.00	743.20	743.275	0.0400	73.40
19	46.5880	13.000	7.040	17.00	743.20	743.237	0.0200	73.40
20	46.2960	13.000	7.040	17.00	743.20	743.219	0.0100	73.40
21	47.2540	12.500	7.630	61.20	745.00	746.623	0.8800	116.60
22	46.0430	12.500	7.640	63.10	745.00	745.877	0.4800	116.60
23	45.8310	12.500	7.570	63.10	745.00	745.560	0.3000	116.60
24	45.3020	12.500	7.570	64.50	745.00	745.373	0.2000	116.60
25	44.5340	12.500	7.560	63.50	745.00	745.187	0.1000	116.60
26	43.9910	12.500	7.560	63.50	745.00	745.093	0.0500	116.60
27	43.2020	12.500	7.560	60.00	745.00	745.019	0.0100	116.60

CALIBRATION CHECKOUT - COMPARISON OF EXPERIMENTAL AND CALCULATED VELOCITY

READING NUMBER	AIR TEMPERATURE AT PROBE (F)	AIR TEMPERATURE AT WIRE FILM (F)	WATER COMPOSITION (MOL.PC.)	EXPERIMENTAL VELOCITY (FT/SEC)	CALCULATED VELOCITY (FT/SEC)
1	71.73	330.88	2.29	3.6362	3.6271
2	71.73	330.88	2.29	3.2079	3.2472
3	71.73	330.88	2.29	3.1004	3.1199
4	71.73	330.88	2.29	2.5407	2.5732
5	71.73	330.88	2.29	2.2380	2.2543
6	71.73	330.88	2.29	1.9712	1.9849
7	71.73	330.88	2.29	1.6818	1.6930
8	71.73	330.88	2.29	1.4339	1.4219
9	71.73	330.88	2.29	1.2615	1.2417
10	71.73	330.88	2.29	1.0953	1.0835
11	71.73	330.88	2.29	0.9330	0.9155
12	71.73	330.88	2.29	0.7777	0.7649
13	71.73	330.88	2.29	0.6743	0.6729
14	71.73	330.88	2.29	0.5429	0.5622
15	71.73	330.88	2.29	0.4561	0.4718
16	71.73	330.88	2.29	0.3889	0.4052
17	71.73	330.88	2.29	0.3349	0.3498
18	71.73	330.88	2.29	0.3038	0.3239
19	71.73	330.88	2.29	0.2317	0.2819
20	71.73	330.88	2.29	0.1666	0.2409
21	123.04	334.79	8.21	1.3360	1.2306
22	123.91	335.23	8.47	1.0012	0.8837
23	117.82	332.18	8.47	0.7820	0.7600
24	117.82	332.18	8.66	0.6588	0.6341
25	116.95	331.75	8.52	0.4864	0.4663
26	116.95	331.75	8.52	0.3580	0.3665
27	116.95	331.75	8.05	0.1759	0.2423

Table XI. Results of hot wire anemometer velocity calibration.

Wire number	Equation (13) constants			
	From calibration		From Eqs. (14) and (15)	
	$K_1 \times 10^{-4}$	$K_2 \times 10^{-3}$	$K_1^a \times 10^{-4}$	$K_2^b \times 10^{-3}$
2	0.5976	0.3875	0.7300	0.3480
3	0.5629	0.3824	0.7300	0.3480

[a] K_1 was calculated by substituting the measured length of wire (0.095 in.) in Eq. (14).

[b] K_2 was calculated by Eq. (15) using a wire diameter computed from measured values of wire length, resistivity and resistance. The calculated diameter, 0.000252 in. compared well with the manufacturer's specifications.

Table XII. Air flow rate data corresponding to twelve measured velocity profiles.

Run number	Δp across orifice meter (in. water)	Static pressure at orifice meter (in. water)	Temperature at orifice meter (° C)	Water composition in inlet air stream (lb./lb.d.a.)	Atmospheric pressure (mm. Hg)	Orifice diameter (in.)
D-2-0	1.47	1.09	24.80	0.0075	743.3	1.625
D-3-0	1.34	1.09	24.80	0.0075	743.3	2.115
D-2-1	1.48	1.11	24.80	0.0079	744.2	1.625
W-2-1	1.48	1.11	25.80	0.0099	744.2	1.625
D-3-1	1.36	1.09	25.30	0.0079	744.4	2.115
W-3-1	1.36	1.09	25.30	0.0102	744.6	2.115
D-2-2	1.47	1.09	25.80	0.0080	744.7	1.625
W-2-2	1.47	1.09	24.40	0.0102	744.2	1.625
D-3-2	1.36	1.09	25.30	0.0080	744.7	2.115
W-3-2	1.36	1.09	25.30	0.0102	744.6	2.115
D-4-2	1.71	1.30	25.20	0.0080	745.4	1.625
W-4-2	1.71	1.30	26.00	0.0102	745.7	1.625

TABLE XIII A

RESULTS OF TEST SECTION TRAVERSE - VELOCITY PROFILE

WIRE NUMBER TWO RUN NUMBER D-2-0 TRAVERSE PERFORMED ON JUN 14

COMMENTS
DRY VELOCITY PROFILE AT STATION ZERO REYNOLDS NUMBER = 9500

INPUT DATA

READING NUMBER	PROBE POSITION (SCALE READING)	WIRE CURRENT (MILLIAMPS)	HOT WIRE RESISTANCE (OHMS)	COLD WIRE RESISTANCE (OHMS)	WATER VAPOR PRESSURE (MM HG)	TEST SECTION PRESSURE (MM HG)
1	0.948	48.1010	13.00	6.94	8.92	743.30
2	0.970	48.4340	13.00	6.94	8.92	743.30
3	1.000	50.2140	13.00	6.95	8.92	743.30
4	1.050	51.7270	13.00	6.95	8.92	743.30
5	1.100	52.7770	13.00	6.95	8.92	743.30
6	1.150	53.2420	13.00	6.95	8.92	743.30
7	1.200	53.7900	13.00	6.95	8.92	743.30
8	1.300	54.1820	13.00	6.95	8.92	743.30
9	1.500	54.8400	13.00	6.95	8.92	743.30
10	2.000	55.2500	13.00	6.95	8.92	743.30
11	2.500	55.5680	13.00	6.95	8.92	743.30
12	3.000	55.6900	13.00	6.95	8.92	743.30
13	3.500	55.7480	13.00	6.95	8.92	743.30
14	4.000	55.8280	13.00	6.95	8.92	743.30
15	4.500	55.8280	13.00	6.95	8.92	743.30
16	5.000	55.8280	13.00	6.95	8.92	743.30
17	5.500	55.7840	13.00	6.95	8.92	743.30
18	6.000	55.7180	13.00	6.95	8.92	743.30
19	6.500	55.3440	13.00	6.95	8.92	743.30
20	7.000	55.1370	13.00	6.95	8.92	743.30
21	7.500	54.8500	13.00	6.95	8.92	743.30

RESULTS OF TEST SECTION TRAVERSE

READING NUMBER	Y/R	AIR TEMPERATURE (C)	WATER COMPOSITION (MOL.PC.)	AIR VELOCITY (FT/SEC)
1	0.0048	24.330	1.200	0.449
2	0.0107	24.330	1.200	0.512
3	0.0187	24.793	1.200	0.927
4	0.0320	24.793	1.200	1.370
5	0.0453	24.793	1.200	1.733
6	0.0587	24.793	1.200	1.909
7	0.0720	24.793	1.200	2.129
8	0.0987	24.793	1.200	2.295
9	0.1520	24.793	1.200	2.589
10	0.2853	24.793	1.200	2.783
11	0.4187	24.793	1.200	2.939
12	0.5520	24.793	1.200	3.000
13	0.6853	24.793	1.200	3.030
14	0.8187	24.793	1.200	3.070
15	0.9520	24.793	1.200	3.070
16	0.9147	24.793	1.200	3.070
17	0.7813	24.793	1.200	3.048
18	0.6480	24.793	1.200	3.014
19	0.5147	24.793	1.200	2.829
20	0.3813	24.793	1.200	2.729
21	0.2480	24.793	1.200	2.594

TABLE XIII B

RESULTS OF TEST SECTION TRAVERSE - VELOCITY PROFILE

WIRE NUMBER TWO RUN NUMBER D-3-0 TRAVERSE PERFORMED ON JUN 14

COMMENTS
DRY VELOCITY PROFILE AT STATION ZERO REYNOLDS NUMBER = 16950

INPUT DATA

READING NUMBER	PROBE POSITION (SCALE READING)	WIRE CURRENT (MILLIAMPS)	HOT WIRE RESISTANCE (OHMS)	COLD WIRE RESISTANCE (OHMS)	WATER VAPOR PRESSURE (MM HG)	TEST SECTION PRESSURE (MM HG)
1	0.948	50.0780	13.00	6.95	8.92	743.30
2	0.970	52.4090	13.00	6.95	8.92	743.30
3	1.000	54.1690	13.00	6.95	8.92	743.30
4	1.050	55.7720	13.00	6.95	8.92	743.30
5	1.100	56.9110	13.00	6.95	8.92	743.30
6	1.150	57.3610	13.00	6.95	8.92	743.30
7	1.200	57.6260	13.00	6.95	8.92	743.30
8	1.300	57.8580	13.00	6.95	8.92	743.30
9	1.500	58.3800	13.00	6.95	8.92	743.30
10	2.000	58.8100	13.00	6.95	8.92	743.30
11	2.500	59.1260	13.00	6.95	8.92	743.30
12	3.000	59.2500	13.00	6.95	8.92	743.30
13	3.500	59.3540	13.00	6.95	8.92	743.30
14	4.000	59.4020	13.00	6.95	8.92	743.30
15	4.500	59.4700	13.00	6.95	8.92	743.30
16	5.000	59.5250	13.00	6.95	8.92	743.30
17	5.500	59.4430	13.00	6.95	8.92	743.30
18	6.000	59.3880	13.00	6.95	8.92	743.30
19	6.500	59.3190	13.00	6.95	8.92	743.30
20	7.000	59.1300	13.00	6.95	8.92	743.30
21	7.500	58.7440	13.00	6.95	8.92	743.30

RESULTS OF TEST SECTION TRAVERSE

READING NUMBER	Y/R	AIR TEMPERATURE (C)	WATER COMPOSITION (MOL.PC.)	AIR VELOCITY (FT/SEC)
1	0.0048	24.793	1.200	0.892
2	0.0107	24.793	1.200	1.600
3	0.0187	24.793	1.200	2.289
4	0.0320	24.793	1.200	3.042
5	0.0453	24.793	1.200	3.655
6	0.0587	24.793	1.200	3.915
7	0.0720	24.793	1.200	4.074
8	0.0987	24.793	1.200	4.216
9	0.1520	24.793	1.200	4.546
10	0.2853	24.793	1.200	4.830
11	0.4187	24.793	1.200	5.045
12	0.5520	24.793	1.200	5.131
13	0.6853	24.793	1.200	5.204
14	0.8187	24.793	1.200	5.238
15	0.9520	24.793	1.200	5.286
16	0.9147	24.793	1.200	5.325
17	0.7813	24.793	1.200	5.267
18	0.6480	24.793	1.200	5.228
19	0.5147	24.793	1.200	5.179
20	0.3813	24.793	1.200	5.048
21	0.2480	24.793	1.200	4.786

TABLE XIII C

RESULTS OF TEST SECTION TRAVERSE - VELOCITY PROFILE

WIRE NUMBER TWO RUN NUMBER D-2-1 TRAVERSE PERFORMED ON JUN 15

COMMENTS
DRY VELOCITY PROFILE AT STATION ONE REYNOLDS NUMBER = 9500

INPUT DATA

READING NUMBER	PROBE POSITION (SCALE READING)	WIRE CURRENT (MILLIAMPS)	HOT WIRE RESISTANCE (OHMS)	COLD WIRE RESISTANCE (OHMS)	WATER VAPOR PRESSURE (MM HG)	TEST SECTION PRESSURE (MM HG)
1	0.948	48.6850	13.00	6.94	9.34	744.20
2	0.970	49.9240	13.00	6.94	9.34	744.20
3	1.000	50.9550	13.00	6.95	9.34	744.20
4	1.050	52.4480	13.00	6.95	9.34	744.20
5	1.100	53.2650	13.00	6.95	9.34	744.20
6	1.150	53.7190	13.00	6.95	9.34	744.20
7	1.200	54.1190	13.00	6.95	9.34	744.20
8	1.300	54.4210	13.00	6.95	9.34	744.20
9	1.500	54.9640	13.00	6.95	9.34	744.20
10	2.000	55.2500	13.00	6.95	9.34	744.20
11	2.500	55.4380	13.00	6.95	9.34	744.20
12	3.000	55.7440	13.00	6.95	9.34	744.20
13	3.500	55.8080	13.00	6.95	9.34	744.20
14	4.000	55.9390	13.00	6.95	9.34	744.20
15	4.500	55.9390	13.00	6.95	9.34	744.20
16	5.000	55.8900	13.00	6.95	9.34	744.20
17	6.000	55.7150	13.00	6.95	9.34	744.20
18	7.000	55.2920	13.00	6.95	9.34	744.20

RESULTS OF TEST SECTION TRAVERSE

READING NUMBER	Y/R	AIR TEMPERATURE (C)	WATER COMPOSITION (MOL.PC.)	AIR VELOCITY (FT/SEC)
1	0.0104	24.330	1.255	0.561
2	0.0163	24.330	1.255	0.843
3	0.0243	24.793	1.255	1.130
4	0.0376	24.793	1.255	1.611
5	0.0509	24.793	1.255	1.915
6	0.0643	24.793	1.255	2.096
7	0.0776	24.793	1.255	2.264
8	0.1043	24.793	1.255	2.395
9	0.1576	24.793	1.255	2.642
10	0.2909	24.793	1.255	2.778
11	0.4243	24.793	1.255	2.870
12	0.5576	24.793	1.255	3.023
13	0.6909	24.793	1.255	3.055
14	0.8243	24.793	1.255	3.122
15	0.9576	24.793	1.255	3.122
16	0.9091	24.793	1.255	3.097
17	0.6424	24.793	1.255	3.008
18	0.3757	24.793	1.255	2.799

TABLE XIII D

RESULTS OF TEST SECTION TRAVERSE - VELOCITY PROFILE

WIRE NUMBER TWO RUN NUMBER W-2-1 TRAVERSE PERFORMED ON JUN 16

COMMENTS
VELOCITY PROFILE WITH MASS TRANSFER AT STATION ONE REYNOLDS NUMBER = 9500

INPUT DATA

READING NUMBER	PROBE POSITION (SCALE READING)	WIRE CURRENT (MILLIAMPS)	HOT WIRE RESISTANCE (OHMS)	COLD WIRE RESISTANCE (OHMS)	WATER VAPOR PRESSURE (MM HG)	TEST SECTION PRESSURE (MM HG)
1	0.950	48.6370	13.00	6.95	14.20	744.20
2	0.970	49.6350	13.00	6.95	14.05	744.20
3	1.000	50.8950	13.00	6.96	13.80	744.20
4	1.050	52.5350	13.00	6.97	13.42	744.20
5	1.100	53.1400	13.00	6.97	13.15	744.20
6	1.150	53.7350	13.00	6.97	12.72	744.20
7	1.200	53.9800	13.00	6.97	12.72	744.20
8	1.300	54.5060	13.00	6.97	12.58	744.20
9	1.500	54.8810	13.00	6.97	12.49	744.20
10	2.000	55.1170	13.00	6.97	12.30	744.20
11	2.500	55.5550	13.00	6.97	12.20	744.20
12	3.000	55.6800	13.00	6.97	12.20	744.20
13	3.500	55.7720	13.00	6.97	12.20	744.20
14	4.000	55.8010	13.00	6.97	12.20	744.20
15	4.500	55.9200	13.00	6.97	12.20	744.20

RESULTS OF TEST SECTION TRAVERSE

READING NUMBER	Y/R	AIR TEMPERATURE (C)	WATER COMPOSITION (MOL.PC.)	AIR VELOCITY (FT/SEC)
1	0.0109	24.793	1.908	0.552
2	0.0163	24.793	1.888	0.773
3	0.0243	25.257	1.854	1.115
4	0.0376	25.720	1.803	1.659
5	0.0509	25.720	1.767	1.885
6	0.0643	25.720	1.709	2.124
7	0.0776	25.720	1.709	2.227
8	0.1043	25.720	1.690	2.457
9	0.1576	25.720	1.678	2.629
10	0.2909	25.720	1.653	2.742
11	0.4243	25.720	1.639	2.957
12	0.5576	25.720	1.639	3.020
13	0.6909	25.720	1.639	3.067
14	0.8243	25.720	1.639	3.082
15	0.9576	25.720	1.639	3.143

TABLE XIII E

RESULTS OF TEST SECTION TRAVERSE - VELOCITY PROFILE

WIRE NUMBER TWO RUN NUMBER D-3-1 TRAVERSE PERFORMED ON. JUN 15

COMMENTS
DRY VELOCITY PROFILE AT STATION ONE REYNOLDS NUMBER = 16950

INPUT DATA

READING NUMBER	PROBE POSITION (SCALE READING)	WIRE CURRENT (MILLIAMPS)	HOT WIRE RESISTANCE (OHMS)	COLD WIRE RESISTANCE (OHMS)	WATER VAPOR PRESSURE (MM HG)	TEST SECTI PRESSURE (MM HG)
1	0.948	52.2000	13.00	6.95	9.34	744.40
2	0.970	53.6270	13.00	6.95	9.34	744.40
3	1.000	55.2850	13.00	6.96	9.34	744.40
4	1.050	56.5020	13.00	6.96	9.34	744.40
5	1.100	57.3070	13.00	6.96	9.34	744.40
6	1.150	57.4530	13.00	6.96	9.34	744.40
7	1.200	57.7160	13.00	6.96	9.34	744.40
8	1.300	58.0020	13.00	6.96	9.34	744.40
9	1.500	58.3660	13.00	6.96	9.34	744.40
10	2.000	58.9470	13.00	6.96	9.34	744.40
11	2.500	59.1720	13.00	6.96	9.34	744.40
12	3.000	59.2030	13.00	6.96	9.34	744.40
13	3.500	59.3730	13.00	6.96	9.34	744.40
14	4.000	59.4030	13.00	6.96	9.34	744.40
15	4.500	59.4730	13.00	6.96	9.34	744.40
16	5.000	59.4730	13.00	6.96	9.34	744.40
17	6.000	59.4070	13.00	6.96	9.34	744.40
18	7.000	59.0380	13.00	6.96	9.34	744.40

RESULTS OF TEST SECTION TRAVERSE

READING NUMBER	Y/R	AIR TEMPERATURE (C)	WATER COMPOSITION (MOL.PC.)	AIR VELOCITY (FT/SEC)
1	0.0104	24.793	1.255	1.525
2	0.0163	24.793	1.255	2.058
3	0.0243	25.257	1.255	2.813
4	0.0376	25.257	1.255	3.442
5	0.0509	25.257	1.255	3.900
6	0.0643	25.257	1.255	3.986
7	0.0776	25.257	1.255	4.146
8	0.1043	25.257	1.255	4.323
9	0.1576	25.257	1.255	4.555
10	0.2909	25.257	1.255	4.942
11	0.4243	25.257	1.255	5.096
12	0.5576	25.257	1.255	5.118
13	0.6909	25.257	1.255	5.237
14	0.8243	25.257	1.255	5.258
15	0.9576	25.257	1.255	5.308
16	0.9091	25.257	1.255	5.308
17	0.6424	25.257	1.255	5.261
18	0.3757	25.257	1.255	5.004

TABLE XIII F

RESULTS OF TEST SECTION TRAVERSE - VELOCITY PROFILE

WIRE NUMBER TWO RUN NUMBER W-3-1 TRAVERSE PERFORMED ON JUN 16

COMMENTS
VELOCITY PROFILE WITH MASS TRANSFER AT STATION ONE REYNOLDS NUMBER = 16950

INPUT DATA

READING NUMBER	PROBE POSITION (SCALE READING)	WIRE CURRENT (MILLIAMPS)	HOT WIRE RESISTANCE (OHMS)	COLD WIRE RESISTANCE (OHMS)	WATER VAPOR PRESSURE (MM HG)	TEST SECTION PRESSURE (MM HG)
1	0.950	50.9620	13.00	6.94	13.95	744.60
2	0.970	53.4550	13.00	6.94	13.80	744.60
3	1.000	54.8880	13.00	6.95	13.60	744.60
4	1.050	56.4570	13.00	6.95	13.38	744.60
5	1.100	57.2280	13.00	6.96	13.18	744.60
6	1.150	57.4270	13.00	6.96	13.05	744.60
7	1.200	57.6000	13.00	6.96	12.95	744.60
8	1.300	57.9630	13.00	6.96	12.85	744.60
9	1.500	58.2030	13.00	6.96	12.68	744.60
10	2.000	58.7920	13.00	6.96	12.42	744.60
11	2.500	59.0810	13.00	6.96	12.38	744.60
12	3.000	59.2470	13.00	6.96	12.38	744.60
13	3.500	59.3470	13.00	6.96	12.38	744.60
14	4.000	59.4250	13.00	6.96	12.38	744.60
15	4.500	59.4500	13.00	6.96	12.38	744.60

RESULTS OF TEST SECTION TRAVERSE

READING NUMBER	Y/R	AIR TEMPERATURE (C)	WATER COMPOSITION (MOL.PC.)	AIR VELOCITY (FT/SEC)
1	0.0109	24.330	1.873	1.114
2	0.0163	24.330	1.853	1.963
3	0.0243	24.793	1.826	2.593
4	0.0376	24.793	1.797	3.381
5	0.0509	25.257	1.770	3.838
6	0.0643	25.257	1.753	3.956
7	0.0776	25.257	1.739	4.060
8	0.1043	25.257	1.726	4.283
9	0.1576	25.257	1.703	4.435
10	0.2909	25.257	1.668	4.822
11	0.4243	25.257	1.663	5.018
12	0.5576	25.257	1.663	5.133
13	0.6909	25.257	1.663	5.203
14	0.8243	25.257	1.663	5.258
15	0.9576	25.257	1.663	5.276

TABLE XIII G

RESULTS OF TEST SECTION TRAVERSE - VELOCITY PROFILE

WIRE NUMBER TWO RUN NUMBER D-2-2 TRAVERSE PERFORMED ON JUN 15

COMMENTS
DRY VELOCITY PROFILE AT STATION TWO REYNOLDS NUMBER = 9500

INPUT DATA

READING NUMBER	PROBE POSITION (SCALE READING)	WIRE CURRENT (MILLIAMPS)	HOT WIRE RESISTANCE (OHMS)	COLD WIRE RESISTANCE (OHMS)	WATER VAPOR PRESSURE (MM HG)	TEST SECTION PRESSURE (MM HG)
1	0.950	47.8830	13.00	6.97	9.50	744.70
2	0.970	48.3510	13.00	6.97	9.50	744.70
3	1.000	49.8190	13.00	6.97	9.50	744.70
4	1.050	51.6850	13.00	6.97	9.50	744.70
5	1.100	52.8100	13.00	6.97	9.50	744.70
6	1.150	53.3500	13.00	6.97	9.50	744.70
7	1.200	53.9150	13.00	6.97	9.50	744.70
8	1.300	54.2610	13.00	6.97	9.50	744.70
9	1.500	54.8470	13.00	6.97	9.50	744.70
10	2.000	55.1480	13.00	6.97	9.50	744.70
11	2.500	55.3680	13.00	6.97	9.50	744.70
12	3.000	55.5760	13.00	6.97	9.50	744.70
13	3.500	55.7280	13.00	6.97	9.50	744.70
14	4.000	55.8390	13.00	6.97	9.50	744.70
15	4.500	55.8390	13.00	6.97	9.50	744.70
16	5.000	55.8390	13.00	6.97	9.50	744.70
17	6.000	55.8020	13.00	6.97	9.50	744.70
18	7.000	55.2050	13.00	6.97	9.50	744.70

RESULTS OF TEST SECTION TRAVERSE

READING NUMBER	Y/R	AIR TEMPERATURE (C)	WATER COMPOSITION (MOL.PC.)	AIR VELOCITY (FT/SEC)
1	0.0045	25.720	1.275	0.424
2	0.0099	25.720	1.275	0.512
3	0.0179	25.720	1.275	0.840
4	0.0312	25.720	1.275	1.375
5	0.0445	25.720	1.275	1.767
6	0.0579	25.720	1.275	1.975
7	0.0712	25.720	1.275	2.206
8	0.0979	25.720	1.275	2.355
9	0.1512	25.720	1.275	2.621
10	0.2845	25.720	1.275	2.763
11	0.4179	25.720	1.275	2.871
12	0.5512	25.720	1.275	2.974
13	0.6845	25.720	1.275	3.051
14	0.8179	25.720	1.275	3.108
15	0.9512	25.720	1.275	3.108
16	0.9155	25.720	1.275	3.108
17	0.6488	25.720	1.275	3.089
18	0.3821	25.720	1.275	2.791

TABLE XIII H

RESULTS OF TEST SECTION TRAVERSE - VELOCITY PROFILE

WIRE NUMBER TWO RUN NUMBER W-2-2 TRAVERSE PERFORMED ON JUN 15

COMMENTS
VELOCITY PROFILE WITH MASS TRANSFER AT STATION TWO REYNOLDS NUMBER = 9500

INPUT DATA

READING NUMBER	PROBE POSITION (SCALE READING)	WIRE CURRENT (MILLIAMPS)	HOT WIRE RESISTANCE (OHMS)	COLD WIRE RESISTANCE (OHMS)	WATER VAPOR PRESSURE (MM HG)	TEST SECTION PRESSURE (MM HG)
1	0.950	48.2300	13.00	6.94	22.40	744.20
2	0.970	48.5470	13.00	6.94	21.20	744.20
3	1.000	50.2280	13.00	6.94	20.50	744.20
4	1.050	52.1010	13.00	6.94	19.12	744.20
5	1.100	52.7930	13.00	6.94	17.70	744.20
6	1.150	53.4570	13.00	6.94	16.68	744.20
7	1.200	53.9250	13.00	6.94	15.87	744.20
8	1.300	54.4140	13.00	6.94	14.48	744.20
9	1.500	54.6960	13.00	6.94	13.00	744.20
10	2.000	55.2400	13.00	6.94	12.50	744.20
11	2.500	55.5850	13.00	6.94	12.31	744.20
12	3.000	55.7240	13.00	6.94	12.30	744.20
13	3.500	55.8020	13.00	6.94	12.25	744.20
14	4.000	55.9450	13.00	6.94	12.22	744.20
15	4.500	55.9450	13.00	6.94	12.20	744.20
16	5.000	55.9450	13.00	6.94	12.22	744.20
17	6.000	55.8400	13.00	6.94	12.31	744.20
18	7.000	55.3430	13.00	6.94	12.42	744.20

RESULTS OF TEST SECTION TRAVERSE

READING NUMBER	Y/R	AIR TEMPERATURE (C)	WATER COMPOSITION (MOL.PC.)	AIR VELOCITY (FT/SEC)
1	0.0051	24.330	3.010	0.458
2	0.0104	24.330	2.849	0.520
3	0.0184	24.330	2.755	0.903
4	0.0317	24.330	2.569	1.460
5	0.0451	24.330	2.378	1.704
6	0.0584	24.330	2.241	1.958
7	0.0717	24.330	2.132	2.149
8	0.0984	24.330	1.946	2.362
9	0.1517	24.330	1.747	2.491
10	0.2851	24.330	1.680	2.746
11	0.4184	24.330	1.654	2.914
12	0.5517	24.330	1.653	2.984
13	0.6851	24.330	1.646	3.023
14	0.8184	24.330	1.642	3.096
15	0.9517	24.330	1.639	3.096
16	0.9149	24.330	1.642	3.096
17	0.6483	24.330	1.654	3.042
18	0.3816	24.330	1.669	2.796

TABLE XIII I

RESULTS OF TEST SECTION TRAVERSE - VELOCITY PROFILE

WIRE NUMBER TWO RUN NUMBER D-3-2 TRAVERSE PERFORMED ON JUN 15

COMMENTS
DRY VELOCITY PROFILE AT STATION TWO REYNOLDS NUMBER = 16950

INPUT DATA

READING NUMBER	PROBE POSITION (SCALE READING)	WIRE CURRENT (MILLIAMPS)	HOT WIRE RESISTANCE (OHMS)	COLD WIRE RESISTANCE (OHMS)	WATER VAPOR PRESSURE (MM HG)	TEST SECTION PRESSURE (MM HG)
1	0.950	50.1220	13.00	6.96	9.50	744.70
2	0.970	51.3720	13.00	6.96	9.50	744.70
3	1.000	53.7960	13.00	6.96	9.50	744.70
4	1.050	56.0620	13.00	6.96	9.50	744.70
5	1.100	57.0030	13.00	6.96	9.50	744.70
6	1.150	57.2490	13.00	6.96	9.50	744.70
7	1.200	57.5430	13.00	6.96	9.50	744.70
8	1.300	58.0820	13.00	6.96	9.50	744.70
9	1.500	58.3460	13.00	6.96	9.50	744.70
10	2.000	58.7330	13.00	6.96	9.50	744.70
11	2.500	59.0160	13.00	6.96	9.50	744.70
12	3.000	59.3620	13.00	6.96	9.50	744.70
13	3.500	59.4730	13.00	6.96	9.50	744.70
14	4.000	59.5020	13.00	6.96	9.50	744.70
15	4.500	59.5420	13.00	6.96	9.50	744.70
16	5.000	59.5510	13.00	6.96	9.50	744.70
17	6.000	59.2840	13.00	6.96	9.50	744.70
18	7.000	59.1720	13.00	6.96	9.50	744.70

RESULTS OF TEST SECTION TRAVERSE

READING NUMBER	Y/R	AIR TEMPERATURE (C)	WATER COMPOSITION (MOL.PC.)	AIR VELOCITY (FT/SEC)
1	0.0045	25.257	1.275	0.909
2	0.0099	25.257	1.275	1.265
3	0.0179	25.257	1.275	2.141
4	0.0312	25.257	1.275	3.204
5	0.0445	25.257	1.275	3.721
6	0.0579	25.257	1.275	3.863
7	0.0712	25.257	1.275	4.038
8	0.0979	25.257	1.275	4.371
9	0.1512	25.257	1.275	4.540
10	0.2845	25.257	1.275	4.795
11	0.4179	25.257	1.275	4.986
12	0.5512	25.257	1.275	5.227
13	0.6845	25.257	1.275	5.305
14	0.8179	25.257	1.275	5.326
15	0.9512	25.257	1.275	5.355
16	0.9155	25.257	1.275	5.361
17	0.6488	25.257	1.275	5.172
18	0.3821	25.257	1.275	5.094

TABLE XIII J

RESULTS OF TEST SECTION TRAVERSE - VELOCITY PROFILE

WIRE NUMBER TWO RUN NUMBER W-3-2 TRAVERSE PERFORMED ON JUN 16

COMMENTS
VELOCITY PROFILE WITH MASS TRANSFER AT STATION TWO REYNOLDS NUMBER = 16950

INPUT DATA

READING NUMBER	PROBE POSITION (SCALE READING)	WIRE CURRENT (MILLIAMPS)	HOT WIRE RESISTANCE (OHMS)	COLD WIRE RESISTANCE (OHMS)	WATER VAPOR PRESSURE (MM HG)	TEST SECTION PRESSURE (MM HG)
1	0.950	51.0500	13.00	6.94	20.55	744.60
2	0.970	52.6030	13.00	6.95	19.50	744.60
3	1.000	54.2360	13.00	6.96	18.00	744.60
4	1.050	56.4700	13.00	6.96	17.00	744.60
5	1.100	56.9070	13.00	6.96	15.60	744.60
6	1.150	57.2340	13.00	6.96	14.65	744.60
7	1.200	57.4950	13.00	6.96	14.15	744.60
8	1.300	57.9620	13.00	6.96	13.60	744.60
9	1.500	58.2840	13.00	6.96	12.97	744.60
10	2.000	58.9750	13.00	6.96	12.70	744.60
11	2.500	59.0560	13.00	6.96	12.51	744.60
12	3.000	59.4050	13.00	6.96	12.50	744.60
13	3.500	59.4960	13.00	6.96	12.50	744.60
14	4.000	59.5550	13.00	6.96	12.50	744.60
15	4.500	59.5550	13.00	6.96	12.50	744.60
16	5.000	59.5510	13.00	6.96	12.50	744.60
17	6.000	59.3000	13.00	6.96	12.50	744.60
18	7.000	59.1680	13.00	6.96	12.60	744.60

RESULTS OF TEST SECTION TRAVERSE

READING NUMBER	Y/R	AIR TEMPERATURE (C)	WATER COMPOSITION (MOL.PC.)	AIR VELOCITY (FT/SEC)
1	0.0051	24.330	2.760	1.128
2	0.0104	24.793	2.619	1.644
3	0.0184	25.257	2.417	2.305
4	0.0317	25.257	2.283	3.397
5	0.0451	25.257	2.095	3.644
6	0.0584	25.257	1.967	3.836
7	0.0717	25.257	1.900	3.992
8	0.0984	25.257	1.826	4.279
9	0.1517	25.257	1.742	4.486
10	0.2851	25.257	1.706	4.944
11	0.4184	25.257	1.680	5.001
12	0.5517	25.257	1.679	5.244
13	0.6851	25.257	1.679	5.308
14	0.8184	25.257	1.679	5.350
15	0.9517	25.257	1.679	5.350
16	0.9149	25.257	1.679	5.347
17	0.6483	25.257	1.679	5.170
18	0.3816	25.257	1.692	5.077

TABLE XIII K

RESULTS OF TEST SECTION TRAVERSE - VELOCITY PROFILE

WIRE NUMBER THREE RUN NUMBER D-4-2 TRAVERSE PERFORMED ON JUN 26

COMMENTS
DRY VELOCITY PROFILE AT STATION TWO REYNOLDS NUMBER = 9800

INPUT DATA

READING NUMBER	PROBE POSITION (SCALE READING)	WIRE CURRENT (MILLIAMPS)	HOT WIRE RESISTANCE (OHMS)	COLD WIRE RESISTANCE (OHMS)	WATER VAPOR PRESSURE (MM HG)	TEST SECTION PRESSURE (MM HG)
1	0.950	44.8730	12.50	7.58	9.54	745.40
2	0.970	45.2160	12.50	7.58	9.54	745.40
3	1.000	46.7280	12.50	7.59	9.54	745.40
4	1.050	48.8640	12.50	7.59	9.54	745.40
5	1.100	50.0200	12.50	7.59	9.54	745.40
6	1.150	50.4010	12.50	7.59	9.54	745.40
7	1.200	51.0880	12.50	7.59	9.54	745.40
8	1.300	51.3990	12.50	7.59	9.54	745.40
9	1.500	51.7370	12.50	7.60	9.54	745.40
10	2.000	52.0850	12.50	7.61	9.54	745.40
11	2.500	52.2110	12.50	7.62	9.54	745.40
12	3.000	52.2610	12.50	7.63	9.54	745.40
13	3.500	52.2710	12.50	7.63	9.54	745.40
14	4.500	52.2610	12.50	7.63	9.54	745.40

RESULTS OF TEST SECTION TRAVERSE

READING NUMBER	Y/R	AIR TEMPERATURE (C)	WATER COMPOSITION (MOL.PC.)	AIR VELOCITY (FT/SEC)
1	0.0069	48.163	1.280	0.602
2	0.0123	48.163	1.280	0.680
3	0.0203	48.646	1.280	1.093
4	0.0336	48.646	1.280	1.837
5	0.0469	48.646	1.280	2.333
6	0.0603	48.646	1.280	2.511
7	0.0736	48.646	1.280	2.852
8	0.1003	48.646	1.280	3.015
9	0.1536	49.129	1.280	3.224
10	0.2869	49.612	1.280	3.447
11	0.4203	50.095	1.280	3.547
12	0.5536	50.578	1.280	3.605
13	0.6869	50.578	1.280	3.611
14	0.9536	50.578	1.280	3.605

TABLE XIII L

RESULTS OF TEST SECTION TRAVERSE - VELOCITY PROFILE

WIRE NUMBER THREE RUN NUMBER W-4-2 TRAVERSE PERFORMED ON JUN 26

COMMENTS
VELOCITY PROFILE WITH MASS TRANSFER AT STATION TWO REYNOLDS NUMBER = 9800

INPUT DATA

READING NUMBER	PROBE POSITION (SCALE READING)	WIRE CURRENT (MILLIAMPS)	HOT WIRE RESISTANCE (OHMS)	COLD WIRE RESISTANCE (OHMS)	WATER VAPOR PRESSURE (MM HG)	TEST SECTION PRESSURE (MM HG)
1	0.950	45.6220	12.50	7.61	85.75	745.70
2	0.970	45.4490	12.50	7.61	81.20	745.70
3	1.000	47.1010	12.50	7.60	73.20	745.70
4	1.050	48.9190	12.50	7.59	63.00	745.70
5	1.100	50.0410	12.50	7.59	53.50	745.70
6	1.150	50.4820	12.50	7.59	45.20	745.70
7	1.200	50.8750	12.50	7.59	37.10	745.70
8	1.300	51.4080	12.50	7.59	25.00	745.70
9	1.500	51.7150	12.50	7.59	17.60	745.70
10	2.000	52.0000	12.50	7.60	14.70	745.70
11	2.500	52.1380	12.50	7.61	14.10	745.70
12	3.000	52.2000	12.50	7.62	13.20	745.70
13	3.500	52.2000	12.50	7.62	12.80	745.70
14	4.500	52.1650	12.50	7.62	12.50	745.70

RESULTS OF TEST SECTION TRAVERSE

READING NUMBER	Y/R	AIR TEMPERATURE (C)	WATER COMPOSITION (MOL.PC.)	AIR VELOCITY (FT/SEC)
1	0.0069	49.612	11.499	0.728
2	0.0123	49.612	10.889	0.689
3	0.0203	49.129	9.816	1.131
4	0.0336	48.646	8.448	1.758
5	0.0469	48.646	7.174	2.241
6	0.0603	48.646	6.061	2.459
7	0.0736	48.646	4.975	2.664
8	0.1003	48.646	3.353	2.971
9	0.1536	48.646	2.360	3.159
10	0.2869	49.129	1.971	3.353
11	0.4203	49.612	1.891	3.461
12	0.5536	50.095	1.770	3.527
13	0.6869	50.095	1.717	3.528
14	0.9536	50.095	1.676	3.509

Table XIII M. Velocities corrected for wall effects.

Run number	Reading number	y/r	Corrected velocity (ft/sec)
D-2-0	1	0.0048	0.251
	2	0.0107	0.445
D-3-0	1	0.0048	0.642
	2	0.0107	1.535
D-2-1	1	0.0104	0.423
W-2-1	1	0.0109	0.487
D-3-1	1	0.0104	1.457
W-3-1	1	0.0109	1.055
D-2-2	1	0.0045	0.220
	2	0.0099	0.436
W-2-2	1	0.0051	0.268
	2	0.0104	0.453
D-3-2	1	0.0045	0.638
	2	0.0099	1.188
W-3-2	1	0.0051	0.859
	2	0.0104	1.250
D-4-2	1	0.0069	0.412
W-4-2	1	0.0069	0.555

Table XIV. Wall correction data.

r/y	I (mA)	R_w (Ω)	R_a (Ω)	$\frac{I^2R_w}{\Delta t}$ (μW/° F)	$\Delta\left(\frac{I^2R_w}{\Delta t}\right)$ (μW/°F)
220.6	45.983	13.00	7.00	54.91	2.86
208.3	45.828	13.00	7.00	54.55	2.50
138.8	45.396	13.00	7.00	53.52	1.47
125.0	45.265	13.00	7.00	53.21	1.16
79.8	44.932	13.00	7.00	52.43	0.38
75.2	44.911	13.00	7.00	52.38	0.33
55.9	44.768	13.00	7.00	52.05	0.00
53.5	44.798	13.00	7.00	52.12	0.07
32.1	44.782	13.00	7.00	52.08	0.03
31.3	44.768	13.00	7.00	52.05	0.00
11.7	44.767	13.00	7.00	52.05	0.00
3.5	44.769	13.00	7.00	52.05	0.00
1.0	44.768	13.00	7.00	52.05	0.00
144.9	43.094	12.50	7.60	54.48	2.37
81.3	42.207	12.50	7.60	52.26	0.15
49.2	42.146	12.50	7.59	52.11	0.00
29.8	42.146	12.50	7.58	52.11	0.00
1.1	42.146	12.50	7.58	52.11	0.00

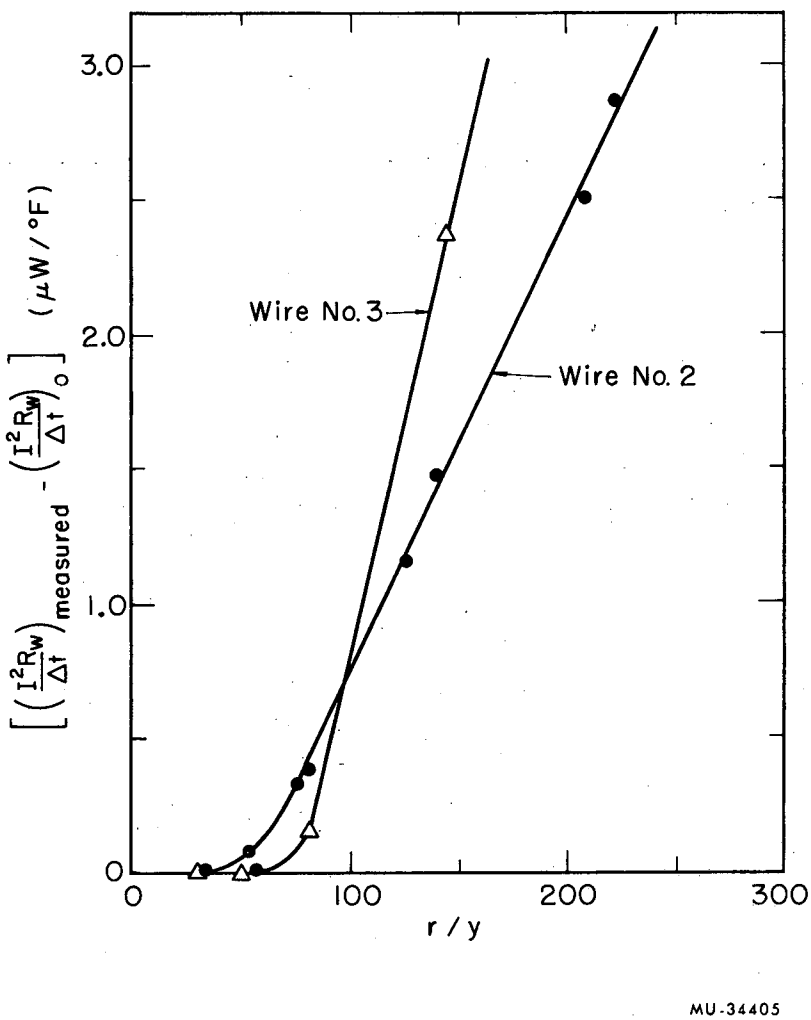

Fig. 29. Wall effect correction curves for wire numbers 2 and 3.

Table XV. Calculated values of dimensionless distance, (y^+) and velocity (u^+) for the wall region.

Run number	No mass transfer		With mass transfer	
	y^+	u^+	y^+	u^+
2-I	3.131	2.593	3.282	2.986
	4.908	5.181	4.908	4.739
	7.317	6.983	7.317	6.885
	11.321	9.963	11.321	10.251
	15.326	11.827	15.326	11.643
	19.360	12.936	19.360	13.109
2-II	1.355	1.349	1.536	1.643
	2.981	2.673	3.131	2.777
	5.390	5.162	5.540	5.561
	9.394	8.504	9.545	9.025
	13.399	10.920	13.579	10.533
	17.433	12.195	17.548	12.091
3-I	5.254	5.324	5.506	3.855
	8.234	7.572	8.234	7.225
	12.276	10.312	12.276	9.516
	18.995	12.582	18.995	12.362
3-II	2.273	2.331	2.576	3.139
	5.001	4.341	5.254	4.568
	9.043	7.875	9.295	8.474
	15.762	11.723	16.014	12.420
4-II	2.207	2.107	2.128	2.888
	3.934	3.470	3.808	3.515
	6.484	5.623	6.303	5.811
	10.733	9.379	10.506	8.997
	14.981	11.864	14.727	11.408
	19.261	12.746	19.015	12.847

C. Computer Programs—Description and Listings

1. Program for Resistance Thermometer Calibration (TEMPER)

This program was written to fit data from the resistance-temperature calibration to Eq. (16). A least-squares calculation is performed; the coefficient of correlation and standard error estimate are calculated. If the values of the correlation coefficient and standard error of estimate meet with the standards specified in the input data deck, a table of temperatures corresponding to a resistance range specified in the input data deck is printed out in addition to the values of the slope, m and y-intercept, c in Eq. (16).

If the values of either the correlation coefficient or standard error of estimate do not meet with the specified standards set, a message is printed out stating that "there is too much scatter in the data".

2. Program for Hot Wire Anemometer Velocity Calibration (CALIB)

This program processes data taken from the hot wire anemometer velocity calibration, fits the resulting information to Eq. (13) and determines the values of constants K_1 and K_2.

Experimental data is first read in. Subroutine AIRFLO calculates the flow rates through the calibrating tube. The velocity of the air stream passing over the hot wire is then calculated using the assumption that the center-line velocity is twice the bulk velocity. Values of the variables appearing in Eq. (13) are evaluated and stored in a two-dimensional matrix. Subroutine MLALS is called and the equation constants K_1 and K_2 are determined by least squares calculations. Subroutine VELOCX then calculates the velocities using the best-fit values of the equation constants given by subroutine MLALS as well as the values of wire current, resistance etc. measured in the calibration. Finally subroutine PROUT is called and the data is printed out as directed.

Experimental velocity is compared with the velocity calculated using the equation constants; this comparison serves as an indication of how well the calibration data has been fit to Eq. (13). In addition to this information, values of the equation constants are printed out.

3. Program for Processing of Velocity Profile Data

This program is used to process experimental velocity profile data. Flow rate information (manometer readings etc.) are first read in (all runs which use the same orifice may be processed in the same cycle), and the Reynolds number based on the test section diameter and inlet conditions is calculated using subroutine AIRFLO and supporting subroutines. Results of these calculations are printed out in tabular form.

Velocity profiles are then processed one at a time. Subroutine VELOC calculates the velocities using Eq. (13). Input data as well as fluid properties evaluated at mean film temperature are printed out. Finally, values of y/r, air temperature at the wire, water composition and velocity are listed.

4. Subroutines

(a) Flow rate calculations are performed by subroutines AIRFLO, COEFF and DISCHA. Discharge coefficients are first read into a matrix by subroutine COEFF. Fluid properties (density, specific heat, thermal conductivity and viscosity) are estimated at the upstream pressure tap temperature. The flow of gas through the orifice is then calculated by Eq. (19) in the form suggested by Stearns et al.[26]

$$W = 359.1\, D_o^2\, \alpha' Y \kappa \sqrt{(\rho_a H)} \qquad (19)$$

where W is the air flow rate in lb./hr, D_o is the orifice diameter in inches, Y is a gas expansion factor, κ is the discharge coefficient, H is the pressure drop across the orifice in inches of water, and α' is an expansion factor for the orifice plate.

The trial and error solution is initiated by assuming the discharge coefficient to be 0.60. The Reynolds number is then calculated with the value of air flow rate determined from Eq. (19). Subroutine DISCHA is then called, and the value of the discharge coefficient corresponding to the calculated Reynolds number is given. If this value is the same as that assumed in the current trial, the correct flow rate has been calculated. Otherwise, an other value of the discharge coefficient is assumed, and the above scheme repeated again. Subroutine AIRFLO has been so designed that approximately twelve trials are required to obtain a solution.

(b) Subroutine ARRAY is used to set up three matrices which contain values of the thermal conductivity, viscosity and heat capacity of the air-water system for temperatures ranging from 10 to 300° C and for compositions ranging from 0 to 45 mol. percent water.

(c) Subroutine MLALS and supporting subroutines were written by Moore and Zeigler.[20] These subroutines determine the least squares fit to Eq. (13) using Gauss' iterative method. Subroutines MLALS and FIT have been modified to suit this application, and therefore listings have been included; the remainder of the subroutines involved may be found in Reference 20.

(d) Subroutine PROPER is an interpolation routine which is used to estimate fluid properties at any given temperature and composition within the range specified by subroutine ARRAY. The fluid property matrices set up by subroutine ARRAY are read in as well as the specified fluid conditions (temperature, composition and pressure). The density of the gas mixture is first calculated from the ideal gas law. The other fluid properties are then evaluated by linear interpolation of values listed in the corresponding matrices.

(e) Subroutine PROUT arranges all the significant data and prints out this information as desired. This segment of CALIB was written as a subroutine so that changes in the print-out format could be made easily as the need arose.

(f) Subroutine VELOC calculates the velocity of the air stream using Eq. (13) and the fluid properties evaluated by subroutine PROPER, as well as values of wire resistance and current.

```
C              T  E  M  P  E  R
C
C     PROGRAM FOR CURVE FITTING HOT WIRE TEMPERATURE CALIBRATION DATA
C     ALL TEMPERATURES ARE IN CENTIGRADE DEGREES, ALL RESISTANCES IN OHM  S
C     CALCULATION EMPLOYS A LEAST SQUARES METHOD
C
    10DIMENSION RESIST(20),TEMP(20),DEVR(20),DEVT(20),DEVRSQ(20),
    11DEVTSQ(20),PRA(20),RESIS(15)
     2 READ(2,3) N,F,E,(RESIST(I),TEMP(I), I=1,N)
     3 FORMAT (10X,I2,F4.3,F4.2,/(10X,2F10.3))
       READ(2,4) N1,N2, WIRE,DATE
     4 FORMAT(I4,I4,A6,A6)
    10 WRITE(3,11)
    11 FORMAT(11H1INPUT DATA    ///)
       WRITE(3,12) WIRE,DATE
    12 FORMAT(14H WIRE NUMBER   A6,25H CALIBRATION PERFORMED   A6  ///)
       WRITE(3,13)
    13 FORMAT (45H              RESISTANCE            TEMPERATURE//)
    14 WRITE(3,15) (RESIST(I),TEMP(I), I = 1,N)
    15 FORMAT (13X,F8.3,13X,F8.3)
    16 WRITE(3,17) N,F,E
    170FORMAT(20HONUMBER OF POINTS = I2/13H MINIMUM R = F4.3/26H MAXIMUM
    171STANDARD ERROR =  F4.2)
C   99      DEFINITIONS
   100 SUMT = 0.0
   101 SUMR = 0.0
   102 SUMRT = 0.0
   103 SUMRSQ = 0.0
   104 SUMRSQ = 0.0
   105 SUMPRA = 0.0
   106 SUMA = 0.0
   107 SUMB = 0.0
       TEMPE = FLOAT(N1*10 - 1)
C 109      PREPARATORY CALCULATIONS
   110 DO 114 I = 1,N
   111 SUMT = SUMT + TEMP(I)
   112 SUMR = SUMR + RESIST(I)
   113 SUMRT = SUMRT + RESIST(I)*TEMP(I)
   114 SUMRSQ = SUMRSQ + RESIST(I)**2
   115 RAV = SUMR/FLOAT(N)
   116 TAV = SUMT/FLOAT(N)
   117 DO 128  I=1,N
   118 DEVR(I) = RESIST(I) - RAV
   119 DEVT(I) = TEMP(I)- TAV
   120 PRA(I) = DEVR(I)*DEVT(I)
   121 SUMPRA = SUMPRA + PRA(I)
   123 DEVRSQ(I) = DEVR(I)**2
   124 DEVTSQ(I)= DEVT(I)**2
C 125 DEVRSQ(I) = A(I)
C 126 DEVTSQ(I) = B(I)
   127 SUMA = SUMA + DEVRSQ(I)
   128 SUMB = SUMB + DEVTSQ(I)
   150 WRITE(3,151)
   151 FORMAT (12H1OUTPUT DATA//)
   152 WRITE(3,153)
   153 FORMAT(37H RESULTS OF LEAST SQUARES CALCULATION///)
C 199      LEAST SQUARES CALCULATION - SLOPE AND INTERCEPT C
   200 SLOPE = SUMPRA/SUMA
   201 C = TAV - SLOPE*RAV
```

```
C 202       COEFFICIENT OF CORRELATION, R
  203 R = SUMPRA/SQRT(SUMA*SUMB)
C 209 STANDARD ERROR OF ESTIMATE = SEE
  210 SEE = SQRT((SUMB - SLOPE*SUMPRA)/FLOAT(N - 2))
  212 TOL = SEE*2.
C 289       TESTS
  290 IF (SEE - E) 295,301,301
  295 IF (R - F) 301,301,313
C 299       OUTPUT CALCULATIONS
  301 WRITE(3,302)
  302 FORMAT (25H TOO MUCH SCATTER IN DATA///)
  303 WRITE(3,304)
  304 FORMAT (45H                RESISTANCE            TEMPERATURE)
  305 TEMPER = FLOAT(10*N1)
  306 DO 311 I = 1,20
  307 RESIS(I) = (TEMPER - C)/SLOPE
  308 WRITE(3,309) RESIS(I), TEMPER
  309 FORMAT (13X,F8.3,13X,F8.3)
  310 TEMPER  = TEMPER + 5.00
  311 CONTINUE
  312 GO TO 334
  313 WRITE(3,314)
  314 FORMAT (45H WIRE RESISTANCE AS A FUNCTION OF TEMPERATURE///)
  315 WRITE(3,316)
  3160FORMAT (105H TEMPERATURE     0.0      0.1      0.2      0.3      0
  3161.4      0.5      0.6      0.7      0.8      0.9    )
  317 WRITE(3,318)
  318 FORMAT(12H (DEG.CENT.))
  319 TEMPER  = FLOAT(10*N1)
      K = 1
  320 J = 1
  321 I = 1
  322 RESIS(I) = (TEMPER - C)/SLOPE
  323 I = I + 1
  324 IF(N2 - J) 334,325,325
  325 IF(10 - I) 328,326,326
  328 IF (50 - K) 327,327,329
  326 TEMPER = TEMPER + 0.10
      GO TO 322
  327 WRITE(3,1000)
 1000 FORMAT(1H1)
      WRITE(3,316)
      WRITE(3,318)
      K = 1
  329 TEMPE = TEMPE + 1.0
      K = K + 1
      WRITE(3,330) TEMPE,(RESIS(I), I = 1,10)
  330 FORMAT (3X,F4.0,8X,F7.4,9(2X,F7.4))
  331 J = J + 1
  332 TEMPER = TEMPER + 0.10
  333 GO TO 321
  334 WRITE(3,335)
  335 FORMAT (32H1 FURTHER RESULTS OF CALCULATION///)
  336 WRITE(3,337) SLOPE,C
  337 FORMAT (8H SLOPE= F8.4, 20X,6H   C= F9.4)
  338 WRITE(3,339) R,TOL
  3390FORMAT(30H COEFFICIENT OF CORRELATION = F5.4//54H DATA PREDICTED
  3391LIES WITHIN A RANGE OF PLUS OR MINUS  F6.3,10H DEGREE(S)//////////
```

```
3312/////////////////////////////)
    GO TO 2
400 STOP
401 END
```

```
C               CALIB  -    TWO CONSTANT VERSION
C
      DIMENSION          AIRES(50),AIRTEM(50),COMPWA(50),CURR(50),DENSUP(
     150),DENSMF(50),DENO(50),DISIP(50),FILTEM(50),FAITEM(50),FWITEM(50)
     2,FLOW(50),HEAD(50),HTCAPY(50,9),PRESS(50),PRESUP(50),RAD(50),SPHTU
     3P(50),SPHTMF(50),TEMPUP(50),TESTDI(50),THCOND(50,9),TUPRES(50),THC
     4DUP(50),THCDMF(50),VISCOS(50,9),VISCUP(50),VISCMF(50),WIRES(50),
     5WIRTEM(50),WVAPR(50),              RE(50),VELOCS(50),VELOC(50) ,
     6DENSAI(50),ORT(50),GAGE(50),FFILTP(50),FTEMUP(50),VELO(50)
      COMMON /LALS/ Y(500),X(500,5),W(500),YC(500),DY(500),
     1              PG(20),P(20),PC(20),DP(20),SP(20),PART(20),AN(20),
     2              AM(20,20), BM(20,21), ISGN(20), IX(20),
     3              DUM(100),N,IK,IM,M,TEST,WVAR,SS,IDF,DET,IRROR
   10 READ(2,1) WIRE,DATE,N,ORDIAM,PIPDIA,SLOPE,C,OPTION
    1 FORMAT (I3,7X,A8,1X,I3,6X,F7.4,3X,F7.4,4X,F7.4,4X,F9.4,I2)
      IF (OPTION) 1000,1000,1001
10000READ(2,2) (CURR(I),WIRES(I),AIRES(I),WVAPR(I),PRESS(I),PRESUP(I),H
10001EAD(I),TEMPUP(I),TESTDI(I),ORT(I),GAGE(I), I = 1,N)
    2 FORMAT(F7.4,F6.2,F6.2,F6.2,F6.2,F6.3,F7.4,F6.2,F7.4,F6.2,I2)
      GO TO 1100
10010READ(2,1002)(CURR(I),WIRES(I),AIRES(I),WVAPR(I),PRESS(I),TESTDI(I)
10011,VELOCS(I), I = 1,N)
1002 FORMAT (F6.4,4X,F5.3,5X,F5.3,5X,F5.2,5X,F5.2,5X,F5.4,5X,F6.4)
      DO 1003 I = 1,N
      VELOC(I) = VELOCS(I)*3600.
1003 CONTINUE
1100 CALL ARRAY (THCOND,VISCOS,HTCAPY)
      DO 3 I = 1,N
      COMPWA(I) = WVAPR(I)*100./PRESS(I)
      AIRTEM(I) = AIRES(I) *SLOPE + C
      WIRTEM(I) = WIRES(I)*SLOPE + C
      TUPRES(I) = PRESS(I) + 1.8659*PRESUP(I)
      FILTEM(I) = (AIRTEM(I) + WIRTEM(I))/2.
      FWITEM(I) = 1.8*WIRTEM(I) + 32.
      FAITEM(I) = 1.8*AIRTEM(I) + 32.
      FFILTP(I) = 1.8*FILTEM(I) + 32.
      FTEMUP(I) = 1.8*TEMPUP(I) + 32.
    3 CONTINUE
      IF (OPTION) 1200,1200,1300
12000CALL AIRFLO(COMPWA,DENSUP,FLOW,HEAD,HTCAPY,N,ORDIAM,PIPDIA,TUPRES,
12001RE,SPHTUP,TEMPUP,THCOND,THCDUP,VISCOS,VISCUP,ORT,GAGE)
13000CALL PROPER(COMPWA,HTCAPY,N,PRESS,FILTEM,THCOND,SPHTMF,THCDMF,VISC
13001MF,VISCOS,DENSMF)
      IF (OPTION) 1400,1400,1500
1400 DO 1402 I = 1,N
      DENSAI(I) = DENSMF(I)*(FILTEM(I) + 273.)/(AIRTEM(I) + 273.)
      VELOC(I) = 366.69*FLOW(I)/(DENSAI(I)*TESTDI(I)**2)
```

```
      VELOCS(I) = VELOC(I)/3600.
 1402 CONTINUE
 1500 DO 4 I = 1,N
      DISIP(I) =CURR(I)**2*WIRES(I)/(FWITEM(I) - FAITEM(I))
      DENO(I) = DENSMF(I)*SPHTMF(I)**0.667*THCDMF(I)**1.333/VISCMF(I)**.
     1333
      X(I,1) =(DISIP(I)*THCDMF(I)*(SPHTMF(I)*VISCMF(I)/THCDMF(I))**0.2)*
     10.76
      X(I,2) = -THCDMF(I)**2*(0.1444*(SPHTMF(I)*VISCMF(I)/THCDMF(I))**0.
     14 - 0.002809)
      X(I,3) = DENO(I)*VELOC(I)
      Y(I) = DISIP(I)**2
    4 CONTINUE
      READ(2,5)(PG(I) , I = 1,2)
    5 FORMAT(2E14.5)
      CALL MLALS (Y,X,N,PG,IRROR,P)
      CALL VELOCX(FAITEM,CURR,DENSMF,N,SPHTMF,THCDMF,VELO,VISCMF,WIRES,
     1FWITEM,P)
      CALL PROUT(AIRES,FAITEM,COMPWA,CURR,DENSMF,DENSUP,FFILTP,HEAD,ORDI
     1AM,PIPDIA,PRESS,TUPRES,SPHTMF,SPHTUP,FTEMUP,THCDMF,THCDUP,VELO,VEL
     2OCS,VISCMF,VISCUP,WIRES,WVAPR,N,P,WIRE,DATE,GAGE,TESTDI,X,Y,DISIP)
      GO TO 10
      STOP
      END
```

```
C                          PROFILE
C     PROGRAMME PROCESSES DATA FROM TURBULENT DIFFUSION EXPERIMENTS
C     OUTPUT  -  VELOCITY,YPLUS,UPLUS,ETC
      DIMENSION AIRES(50),AIRTEM(50),ARRAY2(300)
      DIMENSION COMMEN(13),COMPIN(50),COMPWA(50),CURR(50)
      DIMENSION DATE(50),DENSA (50),DENSIN(50),DENSMF(50),DENSUP(50)
      DIMENSION FAIRTP(50),FFILMT(50),FILTEM(50),FLOW(50),FWIRTP(50)
      DIMENSION GAGE(50),HEAD(50),HTCAPY(50,9)
      DIMENSION ORT(50),PRESS(50),PRESUP(50),PROPOS(50),PRESX(50)
      DIMENSION RE(50),RETS(50),RUN(50)
      DIMENSION SCALE(50),SPHTA(50),SPHTIN(50),SPHTMF(50),SPHTUP(50)
      DIMENSION TEMPIN(50),TEMPUP(50),THCDA(50),THCDIN(50),THCDMF(50),
     1THCDUP(50),THCOND(50,9),TUPRES(50) ,TUPLUS(50)
      DIMENSION UPLUS(50),VELOH(50),VELOS(50),VISCA(50),VISCIN(50),VISCM
     1F(50),VISCOS(50,9),VISCUP(50),WATER(50),WIRE(50),WIRES(50),WIRTEM(
     250),WVAPR(50),X(6),YPLUS(50),ZERO(50),YR(50)
      CALL ARRAY (THCOND,VISCOS,HTCAPY)
C
C     ORIFICE INPUT DATA
C               NSET = NUMBER OF SETS OF DATA WITH DIFFERENT DISCHARGE CO  EFFTS
      READ(2,9001) NSET
 9001 FORMAT (I3)
      NCOUNT = 1
 9002 IF(NSET - NCOUNT) 9004,9003,9003
 9003 READ(2,1) ORDIAM,PIPDIA,NORUN
    1 FORMAT(F7.4,3X,F7.5,1X,I2)
      READ(2,2)(HEAD(I),PRESUP(I),TEMPUP(I),ORT(I),WATER(I),PRESS(I),DAT
```

```
     1E(I),RUN(I),WIRE(I),ZERO(I),TEMPIN(I),I=1,NORUN)
    2 FORMAT(F6.4,F7.4,F5.2,F5.2,F5.4,F6.3,A6,A6,A6,F4.3,F5.2)
      DO 3 I = 1,NORUN
      TUPRES(I) = PRESS(I) + 1.8659*PRESUP(I)
      COMPIN(I) = (WATER(I)/18.)/((WATER(I)/18.) + (1./29.))
      IF (ORDIAM - 2.) 200,200,201
  200 GAGE(I) = 0.
      GO TO 3
  201 GAGE(I) = 1.
    3 CONTINUE
      READ(2,4) (COMMEN(I) , I = 1,13)
    4 FORMAT(13A6)
C
C     DETERMINATION OF FLOW RATE THROUGH APPARATUS
C
      CALL AIRFLO(COMPIN,DENSUP,FLOW,HEAD,HTCAPY,NORUN,ORDIAM,PIPDIA,TUP
     1RES,RE,SPHTUP,TEMPUP,THCOND,THCDUP,VISCOS,VISCUP,ORT,GAGE)
      CALL PROPER(COMPIN,HTCAPY,NORUN,PRESS,TEMPIN,THCOND,SPHTIN,THCDIN,
     1VISCIN,VISCOS,DENSIN)
      DO 5 I = 1,NORUN
    5 RETS(I) = RE(I)*VISCUP(I)*ORDIAM/(VISCIN(I)*7.5)
C
C     PRELIMINARY PRINTOUT
C
      WRITE(3,15)
   15 FORMAT(27H1SUMMARY OF RUNS PROCESSED  ////)
      WRITE(3,14) COMMEN
   14 FORMAT(10H COMMENTS   /13A6  /////)
      WRITE(3,6)
    60FORMAT(49H              RUN      DATE        WIRE    REYNOLDS  /
    61        49H            NUMBER  PERFORMED   NUMBER    NUMBER    )
      WRITE(3,7) (RUN(I),DATE(I),WIRE(I),RETS(I), I = 1,NORUN)
    7 FORMAT(11X,A6,3X,A6,5X,A6,3X,F8.2)
      WRITE(3,8)
    8 FORMAT(26H1OVERALL FLOW INFORMATION  ////)
      WRITE(3,9)
    90FORMAT(115H              RUN   MANOMETER  UPSTREAM   UPSTREAM    ORI
    91FICE PLATE INITIAL H2O ATMOSPHERIC PROBE    TEST SECTION       /
    92        115H           NUMBER    HEAD     PRESSURE  TEMPERATURE   TE
    93MPERATURE  COMPOSITION  PRESSURE   ZERO   INLET TEMPERATURE   /
    94        115H                     (IN.H2O)   (IN.H2O)        (C)
    95 (C)        (LB/LB.D.A)  (MM.HG.)   (IN.)         (C)            ///)
      WRITE(3,10)(RUN(I),HEAD(I),PRESUP(I),TEMPUP(I),ORT(I),WATER(I),
     1PRESS(I),ZERO(I),TEMPIN(I),I=1,NORUN)
   100FORMAT(10X,A6,2X,F8.4,2X,F8.4,5X,F6.2,7X,F6.2,7X,F7.4,5X,F7.3,3X,
   101F6.3,6X,F6.2)
      WRITE(3,11) ORDIAM,PIPDIA
   110FORMAT(21H0 ORIFICE DIAMETER =  F8.4,8H INCHES  /24H  INLET PIPE D
   111IAMETER =  F8.5,8H INCHES  )
      WRITE(3,12)
   120FORMAT(63H1 FLUID PROPERTIES EVALUATED AT TEST SECTION INLET TEMPE
   121RATURE  ////
   122 104H      RUN     TEMPERATURE        WATER          DENSITY
   123 SPECIFIC          THERMAL          VISCOSITY   /
   124 104H    NUMBER                     COMPOSITION
   125   HEAT          CONDUCTIVITY                    /
   126 106H                  (C)          (MOL.PC.)        (LB/CUFT)
   127(BTU/LB.F)      (BTU/HR.FT.F.)      (LB/FT.HR)  ///)
```

```
      WRITE(3,13)(I,TEMPIN(I),COMPIN(I),DENSIN(I),SPHTIN(I),THCDIN(I),VI
     1SCIN(I), I = 1,NORUN)
   13 FORMAT(6X,I2,7X,F7.3,10X,F5.2,10X,F7.5,9X,F7.5,9X,F7.5,10X,F7.5)
C
C     VELOCITY CALCULATIONS
C     DATA PROCESSED ONE RUN AT A TIME(50 OR LESS POINTS)
C
      DO 9000 J = 1,NORUN
      READ(2,100) C,SLOPE,X,N,COMMEN
  100 FORMAT(2F10.4,2E14.5/4E14.5,4X,I3/13A6)
      READ(2,110)(AIRES(I),CURR(I),SCALE(I),WIRES(I),WVAPR(I),I=1,N)
  110 FORMAT(F10.5,F10.6,3F10.5)
      DO 430 I = 1,N
      AIRTEM(I) = AIRES(I)*SLOPE + C
      FAIRTP(I) = 32. + 1.8*AIRTEM(I)
      WIRTEM(I) = WIRES(I)*SLOPE + C
      FWIRTP(I) = 32. + 1.8*WIRTEM(I)
      FILTEM(I) = (AIRTEM(I) + WIRTEM(I))/2.
      FFILMT(I) = 32. + 1.8*FILTEM(I)
      COMPWA(I) = WVAPR(I)*100./PRESS(J)
      PRESX(I) = PRESS(J)
  430 CONTINUE
      CALL PROPER(COMPWA,HTCAPY,N,PRESX,FILTEM,THCOND,SPHTMF,THCDMF,VISC
     1MF,VISCOS,DENSMF)
      CALL PROPER (COMPWA,HTCAPY,N,PRESX,AIRTEM,THCOND,SPHTA,THCDA,VISCA
     1,VISCOS,DENSA)
      CALL VELOC (FAIRTP,CURR,DENSMF,N,SPHTMF,THCDMF,VELOH,VISCMF,WIRES,
     1FWIRTP,X)
C
C     OUTPUT ROUTINE
C
      WRITE(3,940) WIRE(J),RUN(J),DATE(J),RETS(J)
 9400FORMAT (53H1 RESULTS OF TEST SECTION TRAVERSE - VELOCITY PROFILE//
 9401////14H  WIRE NUMBER A6,10X,13H  RUN NUMBER A5,10X,25H  TRAVERSE
 9402PERFORMED ON A8 ,10X,19H REYNOLDS NUMBER = F10.3   /////)
      WRITE(3,941) COMMEN
  941 FORMAT(10H COMMENTS   / 13A6   /////)
      WRITE(3,950)
  950 FORMAT(11H1INPUT DATA////////)
      WRITE(3,960)
 9600FORMAT(111H    READING        PROBE            WIRE          HOT WIR
 9601E       COLD WIRE        WATER        TEST SECTION          /
 9602        114H    NUMBER        POSITION          CURRENT       RESISTAN
 9603CE      RESISTANCE   VAPOR PRESSURE   PRESSURE                  /
 9604        114H                  ( SCALE        (MILLIAMPS)       (OHMS)
 9605          (OHMS)        ( MM HG )       (MM HG )                 /
 9606         26H                  READING ) ///)
      WRITE(3,970) (I,SCALE(I),CURR(I),WIRES(I),AIRES(I),WVAPR(I),PRESX(
     1I), I = 1,N)
  970 FORMAT(6X,I2, 9X,F6.3,11X,F7.4,7X,F6.2,09X,F6.2,10X,F6.2,8X,F6.2)
      WRITE(3,980) (X(I), I = 1,3)
 9800FORMAT(21H0 EQUATION CONSTANTS /  9H0 C(1) = E14.5,7X,9H  C(2) = E
 980114.5,7X,9H  C(3) = E14.5,7X,9H  C(4) = E14.5,7X, / 9H  C(5) = E14.
 98025,7X,9H  C(6) = E14.5)
      WRITE(3,990)
 9900FORMAT(54H1 FLUID PROPERTIES EVALUATED AT MEAN FILM TEMPERATURE //
 9901/104H    READING   MEAN FILM          WATER          DENSITY
 9902 SPECIFIC          THERMAL          VISCOSITY   /
```

```
 9903 104H    NUMBER   TEMPERATURE      COMPOSITION
 9904   HEAT          CONDUCTIVITY                    /
 9905 106H                   (F)           (MOL.PC.)        (LB/CUFT)
 9906(BTU/LB.F)      (BTU/HR.FT.F.)      (LB/FT.HR)  ///)
     WRITE(3,1000)(I,FFILMT(I),COMPWA(I),DENSMF(I),SPHTMF(I),THCDMF(I),
    1VISCMF(I),I = 1,N)
1000 FORMAT(6X,I2,7X,F7.3,10X,F5.2,10X,F7.5,9X,F7.5,9X,F7.5,10X,F7.5)
     WRITE(3,1010)
10100FORMAT(48H1 FLUID PROPERTIES EVALUATED AT AIR TEMPERATURE ///
10101 104H    READING  TEMPERATURE         WATER           DENSITY
10102 SPECIFIC          THERMAL          VISCOSITY   /
10103 104H    NUMBER                     COMPOSITION
10104   HEAT          CONDUCTIVITY                    /
10105 106H                   (F)           (MOL.PC.)        (LB/CUFT)
10106(BTU/LB.F)      (BTU/HR.FT.F.)      (LB/FT.HR)  ///)
     WRITE(3,1020)(I,FAIRTP(I),COMPWA(I),DENSA(I),SPHTA(I),THCDA(I),VIS
    1CA(I), I = 1,N)
1020 FORMAT(6X,I2,7X,F7.3,10X,F5.2,10X,F7.5,9X,F7.5,9X,F7.5,10X,F7.5)
     DO 2009 I = 1,N
2000 IF(ZERO(J)-SCALE(I) - 3.75) 2001,2002,2003
2001 PROPOS(I) = SCALE(I) - ZERO(J)
     GO TO 2004
2002 PROPOS(I) = 3.75
     GO TO 2004
2003 PROPOS(I) = SCALE(I)-ZERO(J)+ 7.5
2004 VELOS(I) = VELOH(I)/3600.
     YR(I) = PROPOS(I)/3.75
2009 CONTINUE
     WRITE(3,2010)
20100FORMAT(34H1RESULTS OF TEST SECTION TRAVERSE  ////
2010185H  READING   Y/R        AIR        WATER       AIR
20102                                  /
2010385H  NUMBER            TEMPERATURE COMPOSITION  VELOCITY
20104                                  /
2010554H                         (C)       (MOL.PC.)   (FT/SEC)       )
     WRITE(3,2020)(I,YR(I),AIRTEM(I),COMPWA(I),VELOS(I), I = 1,N)
2020 FORMAT(4X,I2,4X,F6.4,5X,F7.3,5X,F6.3,5X,F6.3)
9000 CONTINUE
     NCOUNT = NCOUNT + 1
     GO TO 9002
9004 STOP
     END
```

```
C
C                    SUBROUTINE  A I R F L O
C
C              THIS SUBROUTINE, WHEN GIVEN STREAM COMPOSITION, DENSITY,
C              SPECIFIC HEAT, PRESSURE, VISCOSITY ETC AND  DELTA P ACROS  S
C              ORIFICE WILL CALCULATE FLOW THROUGH ORIFICE IN LB/HR
C
      SUBROUTINE AIRFLO (COMPWA,DENSUP,FLOW,HEAD,HTCAPY,N,ORDIAM,PIPDIA,
     1PRESUP,RE,SPHTUP,TEMPUP,THCOND,THCDUP,VISCO,VISCUP,ORT,GAGE)
      DIMENSION COMPWA(50),DENSUP(50),FLOW(50),HEAD(50),HTCAPY(50,9),PRE
     1SUP(50),RE(50),SPHTUP(50),TEMPUP(50),THCOND(50,9),THCDUP(50),VISCO
     2(50,9),VISCUP(50),AVMW(50),ARRAY2(300),ORT(50),GAGE(50)
C              READ IN DISCHARGE COEFFICIENT MATRIX ARRAY
C              VIA SUBROUTINE  COEFF
      CALL COEFF(ARRAY2)
C              CALCULATE ORIFICE AIR CONDITION PROPERTIES
C              VIA SUBROUTINE PROPER
      CALL PROPER (COMPWA,HTCAPY,N,PRESUP,TEMPUP,THCOND,SPHTUP,THCDUP,VI
     1SCUP,VISCO,DENSUP)
      DO 7 I = 1,N
C              ORIFICE DIAMETER CORRECTION
      ALPHA = 1. + 0.00003*(ORT(I) - 20.)
C              GAS EXPANSION CORRECTION
      Y = 1. - 0.6630*HEAD(I)/PRESUP(I)
C
C              START TRIAL AND ERROR SOLUTION BY ASSUMING C = 0.600
C
      C = 0.600
      NCOUNT = 1
      AVMW(I) = COMPWA(I)*0.18 + (100. - COMPWA(I))*0.29
C
C              LOOP 1 BEGINS HERE
C
    1 FLOW(I) = 359.1*ORDIAM**2*C*SQRT(DENSUP(I)*HEAD(I))*ALPHA*Y
      RE(I) = 15.279*FLOW(I)/(ORDIAM*VISCUP(I))
      REYNO = RE(I)
      CALL DISCHA (REYNO,DISCH,ARRAY2,GAGE(I))
      IF ( 500 - NCOUNT) 17,17,8
C              CHECK FOR VALID SOLUTION
    8 IF (C - DISCH) 2,7,4
    2 C = C + 0.05
      NCOUNT = NCOUNT + 1
      GO TO 1
C
C              LOOP 2 BEGINS HERE
C
    3 FLOW(I) = 359.1*ORDIAM**2*C*SQRT(DENSUP(I)*HEAD(I))*ALPHA*Y
      RE(I) = 15.279*FLOW(I)/(ORDIAM*VISCUP(I))
      REYNO = RE(I)
      CALL DISCHA (REYNO,DISCH,ARRAY2,GAGE(I))
      IF ( 500 - NCOUNT) 17,17,9
C              CHECK FOR VALID SOLUTION
    9 IF (C - DISCH) 6,7,4
    4 C = C - 0.005
      NCOUNT = NCOUNT + 1
      GO TO 3
C
C              LOOP 3 BEGINS HERE
C
```

```
    5 FLOW(I) = 359.1*ORDIAM**2*C*SQRT(DENSUP(I)*HEAD(I))*ALPHA*Y
      RE(I) = 15.279*FLOW(I)/(ORDIAM*VISCUP(I))
      REYNO = RE(I)
      CALL DISCHA (REYNO,DISCH,ARRAY2,GAGE(I))
      IF ( 500 - NCOUNT) 17,17,10
                CHECK FOR VALID SOLUTION
   10 IF (C - DISCH) 6,7,7
    6 C = C + 0.001
      NCOUNT = NCOUNT + 1
      GO TO 5
   17 FLOW(I) = 0.0
    7 CONTINUE
      RETURN
      STOP
      END
```

```
C               S U B R O U T I N E    A R R A Y
C
C               THIS SUBROUTINE SETS UP THREE MATRICES FOR THERMAL CONDUC  TIVITY,
C               VISCOSITY AND HEAT CAPACITY
      SUBROUTINE ARRAY (THCOND,VISCOS,HTCAPY)
      DIMENSION THCOND(50,9),VISCOS(50,9),HTCAPY(50,9)
      DO 1  I = 1,50
      THCOND(I,1) = (1.456 + (4.51/100.)*(FLOAT(I) - 1.))*0.01
      THCOND(I,2) = (1.449 + (4.59/100.)*(FLOAT(I) - 1.))*0.01
      THCOND(I,3) = (1.437 + (4.66/100.)*(FLOAT(I) - 1.))*0.01
      THCOND(I,4) = (1.425 + (4.71/100.)*(FLOAT(I) - 1.))*0.01
      THCOND(I,5) = (1.410 + (4.78/100.)*(FLOAT(I) - 1.))*0.01
      THCOND(I,6) = (1.391 + (4.83/100.)*(FLOAT(I) - 1.))*0.01
      THCOND(I,7) = (1.375 + (4.88/100.)*(FLOAT(I) - 1.))*0.01
      THCOND(I,8) = (1.356 + (4.92/100.)*(FLOAT(I) - 1.))*0.01
      THCOND(I,9) = (1.334 + (4.94/100.)*(FLOAT(I) - 1.))*0.01
      VISCOS(I,1) = (4.356 +(10.96/100.)*(FLOAT(I) - 1.))*0.01
      VISCOS(I,2) = (4.332 +(11.04/100.)*(FLOAT(I) - 1.))*0.01
      VISCOS(I,3) = (4.311 +(11.12/100.)*(FLOAT(I) - 1.))*0.01
      VISCOS(I,4) = (4.274 +(11.17/100.)*(FLOAT(I) - 1.))*0.01
      VISCOS(I,5) = (4.232 +(11.22/100.)*(FLOAT(I) - 1.))*0.01
      VISCOS(I,6) = (4.180 +(11.24/100.)*(FLOAT(I) - 1.))*0.01
      VISCOS(I,7) = (4.120 +(11.27/100.)*(FLOAT(I) - 1.))*0.01
      VISCOS(I,8) = (4.051 +(11.25/100.)*(FLOAT(I) - 1.))*0.01
      VISCOS(I,9) = (3.977 +(11.23/100.)*(FLOAT(I) - 1.))*0.01
      HTCAPY(I,1) =(.2401 +(0.018 /100.)*(FLOAT(I) - 1.))
      HTCAPY(I,2) =(.2502 + (.022 /100.)*(FLOAT(I) - 1.))
      HTCAPY(I,3) =(.2603 + (0.026/100.)*(FLOAT(I) - 1.))
      HTCAPY(I,4) =(.2704 + (0.030/100.)*(FLOAT(I) - 1.))
      HTCAPY(I,5) =(.2805 + (0.034/100.)*(FLOAT(I) - 1.))
      HTCAPY(I,6) =(.2906 + (0.038/100.)*(FLOAT(I) - 1.))
      HTCAPY(I,7) =(.3007 + (0.042/100.)*(FLOAT(I) - 1.))
      HTCAPY(I,8) =(.3108 + (0.046/100.)*(FLOAT(I) - 1.))
      HTCAPY(I,9) =(.3209 + (0.050/100.)*(FLOAT(I) - 1.))
    1 CONTINUE
      RETURN
      STOP
      END
```

```
C               S  U  B  R  O  U  T  I  N  E  C  O  E  F  F
C
C
C               THIS SUBROUTINE IS USED TO READ IN DISCHARGE COEFFICIENTS
C
      SUBROUTINE COEFF (ARRAY2)
      DIMENSION ARRAY2(300),ARRAY1(300)
      READ (2,1) L
    1 FORMAT(I3)
      READ(2,2) (ARRAY1(I) , I = 1,L)
    2 FORMAT(8F10.6)
      DO 3 I = 1,L
    3 ARRAY2(I) = ARRAY1(I)/10000.
      RETURN
      STOP
      END
C               S  U  B  R  O  U  T  I  N  E   D  I  S  C  H  A
C                              CALIB VERSION
C
C
C     GIVEN REYNO, THIS SUBROUTINE WILL LOOK UP ONE OF 2 TABLES
C     AND SUPPLY THE DISCHARGE COEFFICIENT      TABLE USED DEPENDS
C     UPON MANOMETER USED     (A) GAGE = 0    LOW
C                             (B) GAGE = 1   HIGH
C
      SUBROUTINE DISCHA (REYNO,DISCH,ARRAY2,GAGE)
      DIMENSION ARRAY2(300),GAGE(50)
      IF (GAGE) 1,1,2
    1 J = IFIX(REYNO/50.) + 1
      K = J + 1
      DISCH = ARRAY2(J) +(ARRAY2(K) - ARRAY2(J))*(REYNO - FLOAT(J-1)*50.
     1)/50.
      GO TO 3
    2 L = IFIX((REYNO - 1750.)/250.) + 161
      M = L + 1
      DISCH = ARRAY2(L) + (ARRAY2(M) - ARRAY2(L))*(REYNO - 1750. - FLOAT
     1(L - 161)*250.)/250.
    3 RETURN
      STOP
      END
C                   S U B R O U T I N E   D I S C H A
C
C                   VERSION TWO - TO BE USED WITH PROFILE
C               GIVEN REYNO, THIS SUBROUTINE WILL LOOK UP ONE
C               OF TWO TABLES AND INDICATE THE APPROPRIATE
C               DISCHARGE COEFFICIENT
C
      SUBROUTINE DISCHA (REYNO,DISCH,ARRAY2,GAGE)
      DIMENSION ARRAY2(300)
      IF (GAGE) 1,2,3
C               ALTERNATE ONE   -  INCORRECT GAGE INDICATED
C               DISCHARGE COEFFICIENT SET EQUAL TO ZERO
C
    1 DISCH = 0.0
      GO TO 4
C               ALTERNATE TWO   - LOW RANGE ORIFICE USED
C
    2 J = IFIX(REYNO/1000.) + 1
```

```
      K = J + 1
      DISCH = ARRAY2(J) + (ARRAY2(K) - ARRAY2(J))*(REYNO - FLOAT(J-1)*10
     100.)/1000.
      GO TO 4
C               ALTERNATE THREE - HIGH RANGE ORIFICE USED
C
    3 L = IFIX(REYNO/2500.) + 161
      M = L + 1
      DISCH = ARRAY2(L) +(ARRAY2(M) - ARRAY2(L))*(REYNO - FLOAT(L - 161)
     1*2500.)/2500.
    4 RETURN
      STOP
      END

C                    S U B R O U T I N E   M L A L S
C     LOS ALAMOS LEAST SQS. FORTRAN IV PACKAGE USED AS A SUBPROGRAM
C
      COMMON /LALS/ Y(500),X(500,5),W(500),YC(500),DY(500),
     1              PG(20),P(20),PC(20),DP(20),SP(20),PART(20),AN(20),
     2              AM(20,20), BM(20,21), ISGN(20), IX(20),
     3              DUM(100),N,IK,IM,M,TEST,WVAR,SS,IDF,DET,IRROR
C     IRROR=1,2,3,4,5=CONVERGED,IT=25,H=10**-10,DET NEG.,ALL P FIXED
      M = 3
      IK = 2
      IM = 0
      ISGN(1) = -1
      ISGN(2) = -2
      TEST = 0.00001
      DO 5 I = 1,N
    5 W(I) = 1.
C
    4 CALL CALC
      CALL PRINT
      GO TO (1,1,2,2,1),IRROR
    2 IM = IK
      DO 3 I=1,IM
    3 IX(I) = I
      GO TO 4
    1 RETURN
      END

      SUBROUTINE FIT(I)
      COMMON /LALS/ Y(500),X(500,5),W(500),YC(500),DY(500),
     1              PG(20),P(20),PC(20),DP(20),SP(20),PART(20),AN(20),
     2              AM(20,20), BM(20,21), ISGN(20), IX(20),
     3              DUM(100),N,IK,IM,M,TEST,WVAR,SS,IDF,DET,IRROR
C     FOR BOB DAVIS BY C RUGGE
C     Y(I) = P(1) X(I,1) + P(1) P(1) X(I,2) + P(2) X(I,3)
C
      IF (I) 1,1,2
    1 WRITE (3,3)
    3 FORMAT (50H0Y(I) = P(1)*X(I,1) + P(1)**2*X(I,2) + P(2)*X(I,3))
    4 RETURN
    2 YC(I) = P(1) * X(I,1) + P(1)**2 * X(I,2) + P(2) * X(I,3)
      PART(1) = X(I,1) + 2. * P(1) * X(I,2)
      PART(2) = X(I,3)
      GO TO 4
      END
```

```
C               S U B R O U T I N E   P R O P E R
C
C               GIVEN THE COMPOSITION AND TEMPERATURE OF AN AIR - WATER
C               MIXTURE,  THIS SUBROUTINE WILL LOOK UP TABLES AND GIVE
C               VALUES OF THE SPECIFIC HEAT, THERMAL CONDUCTIVITY, VISCOS  ITY
C               AND DENSITY OF THE FLUID.
C
      SUBROUTINE PROPER (COMPO,HTCAPY,N,PRESSU,TEMPE,THCOND,THTCAP,TTHCD
     1,TVISCO,VISCO,TDENS)
      DIMENSION COMPO(50),HTCAPY(50,9),PRESSU(50),TEMPE(50),THCOND(50,9)
     1,THTCAP(50),TTHCD(50),TVISCO(50),VISCO(50,9),TDENS(50),AVMW(50)
      DO 1 I = 1,N
      AVMW(I) = COMPO(I)*0.18 + (100. - COMPO(I))*0.29
C               DENSITY CALCULATION
      TDENS(I) = 0.0010038*PRESSU(I)*AVMW(I)/(TEMPE(I) + 273.)
      J =(IFIX(TEMPE(I)) - 20)/10 + 1
      K = J + 1
      L =IFIX(COMPO(I))/5 + 1
      M = L + 1
C               HEAT CAPACITY INTERPOLATION
      ANSA = HTCAPY(J,L) + (HTCAPY(K,L) - HTCAPY(J,L))*(TEMPE(I) - FLOAT
     1(J - 1)*10. - 20.)/10.
      ANSB = HTCAPY(J,M) + (HTCAPY(K,M) - HTCAPY(J,M))*(TEMPE(I) - FLOAT
     1(J - 1)*10. - 20.)/10.
      THTCAP(I)= ANSA + (ANSB - ANSA)*(COMPO(I) - FLOAT(L - 1)*5.)/5.
C               THERMAL CONDUCTIVITY INTERPOLATION
      ANSC = THCOND(J,L) + (THCOND(K,L) - THCOND(J,L))*(TEMPE(I) - FLOAT
     1(J - 1)*10. - 20.)/10.
      ANSD = THCOND(J,M) + (THCOND(K,M) - THCOND(J,M))*(TEMPE(I) - FLOAT
     1(J - 1)*10. - 20.)/10.
      TTHCD(I) = ANSC + (ANSD - ANSC)*(COMPO(I) - FLOAT(L - 1)*5.)/5.
C               VISCOSITY INTERPOLATION
      ANSE = VISCO(J,L) + (VISCO(K,L) - VISCO(J,L))*(TEMPE(I) - FLOAT(J
     1- 1)*10. - 20.)/10.
      ANSF = VISCO(J,M) + (VISCO(K,M) - VISCO(J,M))*(TEMPE(I) - FLOAT(J
     1- 1)*10. - 20.)/10.
      TVISCO(I) = ANSE + (ANSF - ANSE)*(COMPO(I) - FLOAT(L - 1)*5.)/5.
    1 CONTINUE
      RETURN
      STOP
      END
```

```
C                    S U B R O U T I N E   P R O U T
C
      SUBROUTINE PROUT(AIRES,AIRTEM,COMPWA,CURR,DENSMF,DENSUP,FILTEM,HEA
     1D,ORDIAM,PIPDIA,PRESS,PRESUP,SPHTMF,SPHTUP,TEMPUP,THCDMF,THCDUP,
     2VELO,VELOC,VISCMF,VISCUP,WIRES,WVAPR,N,P,WIRE,DATE,GAGE,TESTDI,X,Y
     3,DISIP)
C              THIS SUBROUTINE PRINTS OUT INFORMATION FROM CALIB
      DIMENSION X(500,5),Y(500),P(20)
      DIMENSION AIRES(50),AIRTEM(50),COMPWA(50),CURR(50),DENSMF(50),DENS
     1UP(50),FILTEM(50),HEAD(50),PRESS(50),PRESUP(50),SPHTMF(50),SPHTUP(
     250),TEMPUP(50),THCDMF(50),THCDUP(50),VELO(50),VELOC(50),VELOS(50),
     3VISCMF(50),VISCUP(50),WIRES(50),WVAPR(50),      GAGE(50),TESTDI(50
     4),DISS(50),VHALF(50),                DISIP(50)
C
C              PAGE ONE
C
      WRITE(3,1) WIRE,DATE
    10FORMAT (53H1 RESULTS OF HOT WIRE ANEMOMETER VELOCITY CALIBRATION//
    11////14H  WIRE NUMBER I2,10X,24H  CALIBRATION PERFORMED AB /////)
      WRITE(3,2)
    2 FORMAT(11H INPUT DATA  /////)
      WRITE(3,33)
   330FORMAT(120H              READING      WIRE         WIRE          AIR
   331         WATER          TOTAL            O  R  I  F  I  C  E        /
   332        120H             NUMBER      CURRENT    RESISTANCE    RESISTANC
   333E    VAPOR PRESSURE    PRESSURE     TOTAL      MANOMETER       AIR    /
   334        120H
   335                                   PRESSURE     READING    TEMPERATURE/
   336        120H                        (M.AMP)      (OHMS)      (OHMS)
   337       (MM.HG.)        (MM.HG.)    (MM.HG.)    (IN.H2O)       (F)      )
      WRITE(3,3) (I,CURR(I),WIRES(I),AIRES(I),WVAPR(I),PRESS(I),PRESUP(I
     1),HEAD(I),TEMPUP(I), I = 1,N)
    30FORMAT(14X,I2,7X,F7.4,4X,F7.3,6X,F7.3,8X,F6.2,9X,F6.2,4X,F7.3,4X,
    31F7.4,5X,F6.2)
      WRITE(3,4) N,ORDIAM,PIPDIA
    40FORMAT(18H0 ADDITIONAL DATA /26HONUMBER OF OBSERVATIONS = I2/20H O
    41RIFICE DIAMETER = F6.4/25H ORIFICE PIPE DIAMETER = F6.4 )
C
C              PAGE TWO
C
      WRITE(3,5)(P(I) , I = 1,2)
    50FORMAT(32H1RESULTS OF REGRESSION ANALYSIS  ///8H K(1) = E14.5 ///
    518H K(2) = E14.5)
C
C              PAGE THREE
C
      WRITE(3,66)
   660FORMAT(54H1 FLUID PROPERTIES EVALUATED AT MEAN FILM TEMPERATURE //
   661/104H    READING   MEAN FILM          WATER          DENSITY
   662 SPECIFIC          THERMAL          VISCOSITY    /
   663 104H    NUMBER    TEMPERATURE      COMPOSITION
   664   HEAT          CONDUCTIVITY                    /
   665 106H                  (F)           (MOL.PC.)        (LB/CUFT)
   666(BTU/LB.F)      (BTU/HR.FT.F.)      (LB/FT.HR)   )
      WRITE(3,6) (I,FILTEM(I),COMPWA(I),DENSMF(I),SPHTMF(I),THCDMF(I),VI
     1SCMF(I), I = 1,N)
    60FORMAT                                          (6X,I2,7X,F7.3,10X,F
```

```
     615.2,10X,F7.5,9X,F7.5,9X,F7.5,10X,F7.5)
       DO 9 I = 1,N
       VELOS(I) = VELO(I)/3600.
     9 CONTINUE
C
C                PAGE FOUR
C
       WRITE(3,88)
   880FORMAT(53H1 FLUID PROPERTIES EVALUATED AT ORIFICE TEMPERATURE   //
   881 104H    READING  TEMPERATURE        WATER          DENSITY
   882 SPECIFIC         THERMAL          VISCOSITY   /
   883 104H    NUMBER                    COMPOSITION
   884   HEAT          CONDUCTIVITY                              /
   885 106H                  (F)          (MOL.PC.)        (LB/CUFT)
   886(BTU/LB.F)      (BTU/HR.FT.F.)      (LB/FT.HR)   )
       WRITE(3,8) (I,TEMPUP(I),COMPWA(I),DENSUP(I),SPHTUP(I),THCDUP(I),VI
      1SCUP(I), I=1,N)
    80FORMAT                                          (6X,I2,7X,F7.3,10X,F
    815.2,10X,F7.5,9X,F7.5,9X,F7.5,10X,F7.5)
C
C                PAGE FIVE
C
       WRITE(3,110)
  1100FORMAT(75H1CALIBRATION CHECKOUT - COMPARISON OF EXPERIMENTAL AND C
  1101ALCULATED VELOCITY /////74H   READING   AIR TEMPERATURE AT      WA
  1102TER       EXPERIMENTAL   CALCULATED  /
  1103                         74H   NUMBER     PROBE   WIRE FILM   COMPO
  1104SITION      VELOCITY      VELOCITY   /
  1105                         74H                 (F)       (F)       (MOL
  1106.PC.)       (FT/SEC)      (FT/SEC)    )
       WRITE(3,10)(I,AIRTEM(I),FILTEM(I),COMPWA(I),VELOC(I),VELOS(I),I=1,
      1N)
   100FORMAT                                   (5X,I2,6X,F6.2,4X,F6.2,8X,F5.
   1072,9X,F7.4,6X,F7.4)
C
C                PAGE SIX
C
       WRITE (3,120)
  1200FORMAT(28H1 SUPPLEMENTARY INFORMATION   //// 33H              RUN
  1201  GAGE   TEST     / 33H              NO.   (0=LO)  DIAM     /
  120233H                  (1=HI)  (IN)                 )
       WRITE(3,12)(I, GAGE(I),TESTDI(I),I = 1,N)
    12 FORMAT(13X,I2,5X,I2,5X,F4.2)
C
C                PAGE SEVEN
C
       DO 1000 I = 1,N
  1000 VHALF(I) = SQRT(VELOC(I))
       WRITE(3,1001)
  1001 FORMAT( 65H1 I SQUARED R LOSSES AS A FUNCTION OF SQUARE ROOT OF VE
  10011LOCITY          ///)
       WRITE(3,1002) (DISIP(I),VHALF(I), I = 1,N)
  1002 FORMAT(10X, 18H ISQR/DELTA  T  =  F10.5,10X, 9H VHALF =  F10.7 )
C
       RETURN
       STOP
       END
```

```
C                    S U B R O U T I N E   V E L O C ( X )
C
C
      SUBROUTINE VELOCX(AIRTEM,CURR,DENSMF,N,SPHTMF,THCDMF,VELO,VISCMF,     VEL   1
C                                OR
      SUBROUTINE VELOC (AIRTEM,CURR,DENSMF,N,SPHTMF,THCDMF,VELO,VISCMF,     VEL   1
     1WIRES,WIRTEM,P)
C
C              THIS SUBROUTINE USES THE ANEMOMETER EQUATION TO
C              CALCULATE THE VELOCITY OF THE FLUID STREAM FLOWING
C              OVER THE HOT WIRE
C
    10DIMENSION AIRTEM(50),CURR(50),DENO(50),DENSMF(50),DISIP(50),RAD(50   VEL   3
    11),SPHTMF(50),THCDMF(50),VELO(50),VISCMF(50),WIRES(50),WIRTEM(50),    VEL   4
    12P(20)
      DIMENSION PR(50)
    2 DO 7 I = 1,N                                                         VEL   6
    3 DISIP(I) = CURR(I)**2*WIRES(I)/(WIRTEM(I) - AIRTEM(I))               VEL   7
    50DENO(I) = DENSMF(I)*SPHTMF(I)**0.667*THCDMF(I)**1.333/VISCMF(I)**0   VEL   9
    51.333                                                                 VEL  10
      PR(I) = SPHTMF(I)*VISCMF(I)/THCDMF(I)
    60VELO(I) = (DISIP(I)**2 - 0.76*THCDMF(I)*DISIP(I)*PR(I)**0.2*P(1) +
    61THCDMF(I)**2*(0.1444*PR(I)**0.4 - 0.002809)*P(1)**2)/(DENO(I)*P(2)
    62)
    7 CONTINUE                                                             VEL  14
    8 RETURN                                                               VEL  15
    9 END                                                                  VEL  15
```

D. Sample Calculations

1. Calculation of Temperature and Velocity

The wire temperature is calculated from Eq. (16)

$$t = mR + c \tag{16}$$

For run D-2-1, reading number 18, the measured quantities are

$I = 55.292$ mA
$R_w = 13.00\ \Omega$
$R_a = 6.95\ \Omega$
partial pressure of water = 9.34 mm. Hg
barometric pressure = 744.20 mm. Hg

Values of the slope and intercept determined by least squares analysis of calibration data are

$m = 46.3508\ ^\circ C/\Omega$
$c = -297.345\ ^\circ C$

Substituting equation constants and resistance into Eq. (16)

$$t_w = (46.3508)(13.00) - 297.345 = 305.22^\circ C$$
$$t_a = (46.3508)(6.95) - 297.345 = 24.79^\circ C$$

The mean film temperature is given by

$$t_f = \frac{t_w + t_a}{2} = \frac{305.22 + 24.79}{2} = 165.01^\circ C$$

Fluid properties evaluated at the mean film temperature, t_f are

$\rho_f = 0.0492$ lb./ft^3
$k_f = 0.0211$ Btu/hr ft $^\circ$F

$$(C_p)_f = 0.245 \quad \text{Btu/lb.}\ ^\circ F$$
$$\mu_f = 0.0594 \quad \text{lb./hr ft}$$

Velocity is calculated from Eq. (13),

$$u = \frac{\left(\frac{I^2R_w}{\Delta t}\right)^2 - 0.76\, k_f\left(\frac{I^2R_w}{\Delta t}\right)(Pr)_f^{0.2}\, K_1}{\left[\rho_f(C_p)_f^{2/3}\, k_f^{4/3}/\mu_f^{1/3}\right]K_2} + \frac{k_f^2\left(\left\{0.38(Pr)_f^{0.2}\right\}^2 - \left\{0.25\left[(Gr)_f(Pr)_f\right]^{1/8} + 0.45\left[(Gr)_f(Pr)_f\right]^{1/4}\right\}^2\right)K_1^2}{\left[\rho_f(C_p)^{2/3}\, k_f^{4/3}/\mu_f^{1/3}\right]K_2} \tag{13}$$

where the values of the equation constants determined by a verified library digital computer program are

$$K_1 = 0.59755 \times 10^4$$
$$K_2 = 0.38756 \times 10^3$$

Therefore, evaluating the groups found in Eq. (13),

$$\frac{I^2R_w}{\Delta t} = \frac{(55.292)^2(13.00)}{(305.22 - 24.79)(1.8)} = 78.735 \quad \mu W/^\circ F$$

$$(Pr)_f = \frac{C_p\mu_f}{k} = \frac{(0.245)(0.0594)}{(0.0211)} = 0.690$$

$$(Gr)_f = \frac{g\rho_f^2\, D^3\beta'\Delta t}{\mu_f^2}$$

$$= \frac{(4.173\text{x}10^8)(0.0492)^2(2.083\text{x}10^{-5})^3(280.43)(1.8)}{(0.0594)^2\ (438.01)\ (1.8)}$$

$$= 1.656\text{x}10^{-6}$$

Substituting these values into Eq. (13),

$$u = 10108.8 \text{ ft/hr} = 2.808 \text{ ft/sec}$$

2. Calculation of Dimensionless Distance (y^+) and Velocity (u^+)

Dimensionless distance and velocity are defined as

$$y^+ = y\, u_\tau/\nu \tag{20}$$

$$u^+ = u/u_\tau \tag{21}$$

The value of the friction velocity, u_τ is determined from the relation,

$$u_\tau = \sqrt{\nu \left(\frac{du}{dy}\right)_W} \tag{22}$$

where ν is the kinematic viscosity of the fluid and $(du/dy)_W$ is the velocity gradient at the pipe wall. For Re = 9,500, from Fig. 17,

$$\frac{d(u/u_{max})}{d(y/r)} = 15.6$$

but $u_{max} = 3.148$ ft/sec

and $r = 0.3125$ ft

thus $du/dy = \dfrac{(15.6)(3.148)}{(0.3125)} = 157.15 \text{ sec}^{-1}$

and $u_\tau = \sqrt{(0.0001693)(157.15)} = 0.1631$ ft/sec

For run D-2-1, point 18,

$y = 1.409$ in. $= 0.1174$ ft

$u = 2.808$ ft/sec

thus
$$y^+ = \frac{(0.1174)(0.1631)}{(0.0001693)} = 113.10$$
$$u^+ = (2.808)/(0.1631) = 17.22$$

3. Calculation of Friction Factor

The friction factor may be related to the friction velocity by

$$f = 2\,(u_\tau/u_{avg})^2 \tag{23}$$

The average velocity for Reynolds number of 9,500 is 2.596 ft/sec, thus

$$f = 2(0.1631/2.596)^2 = 0.00789$$

E. Engineering Drawings

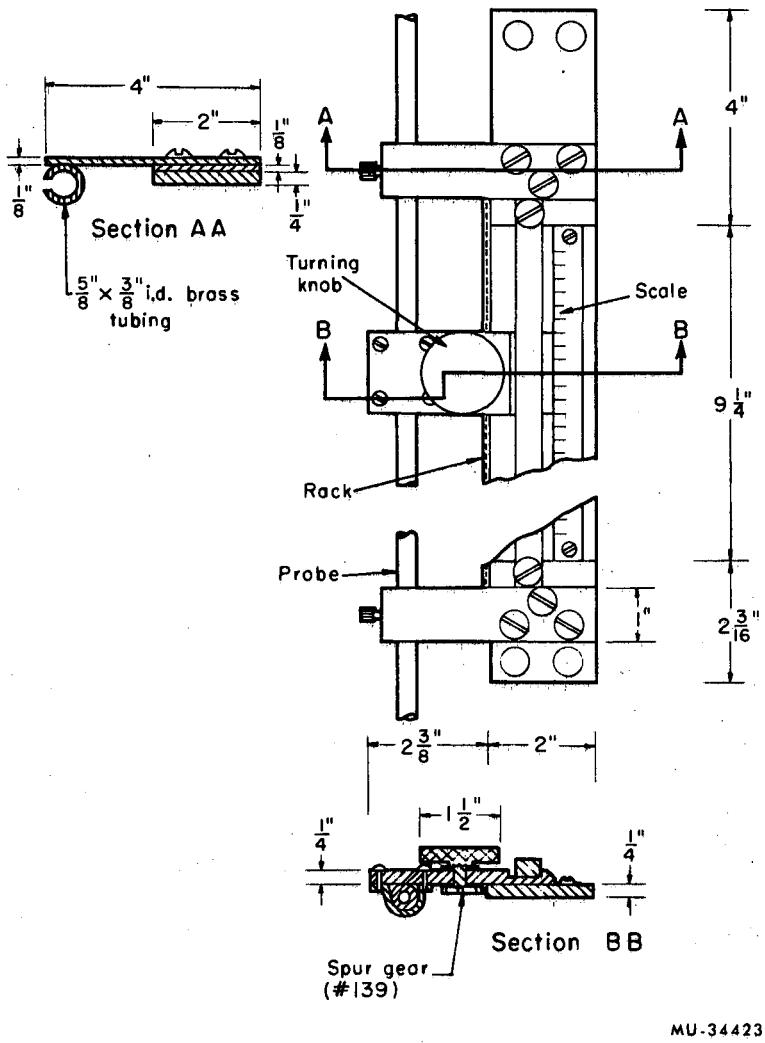

Fig. 30. Traversing mechanism assembly.

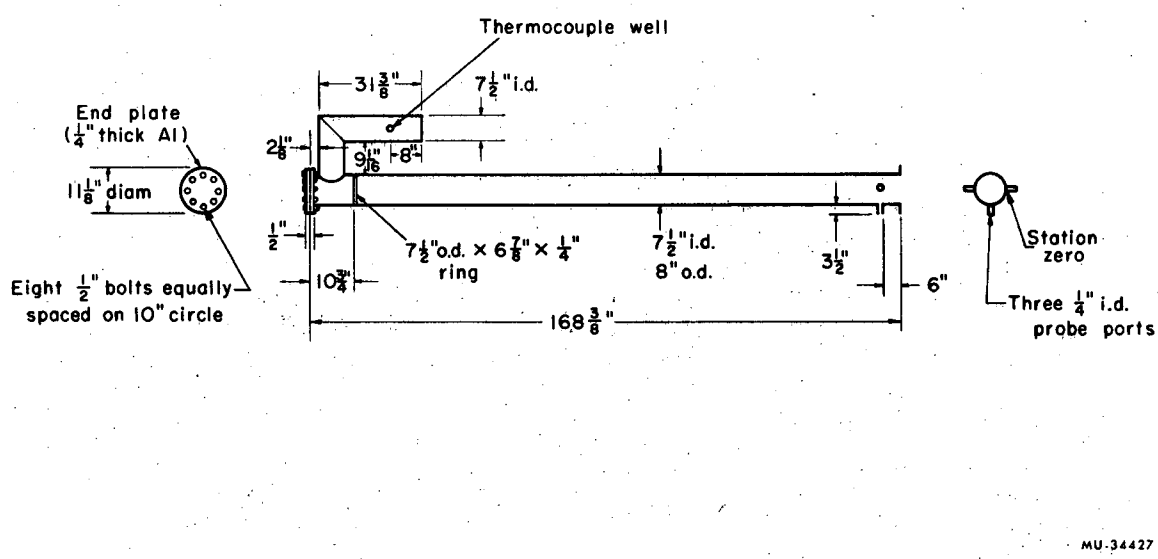

Fig. 31. Calming section.

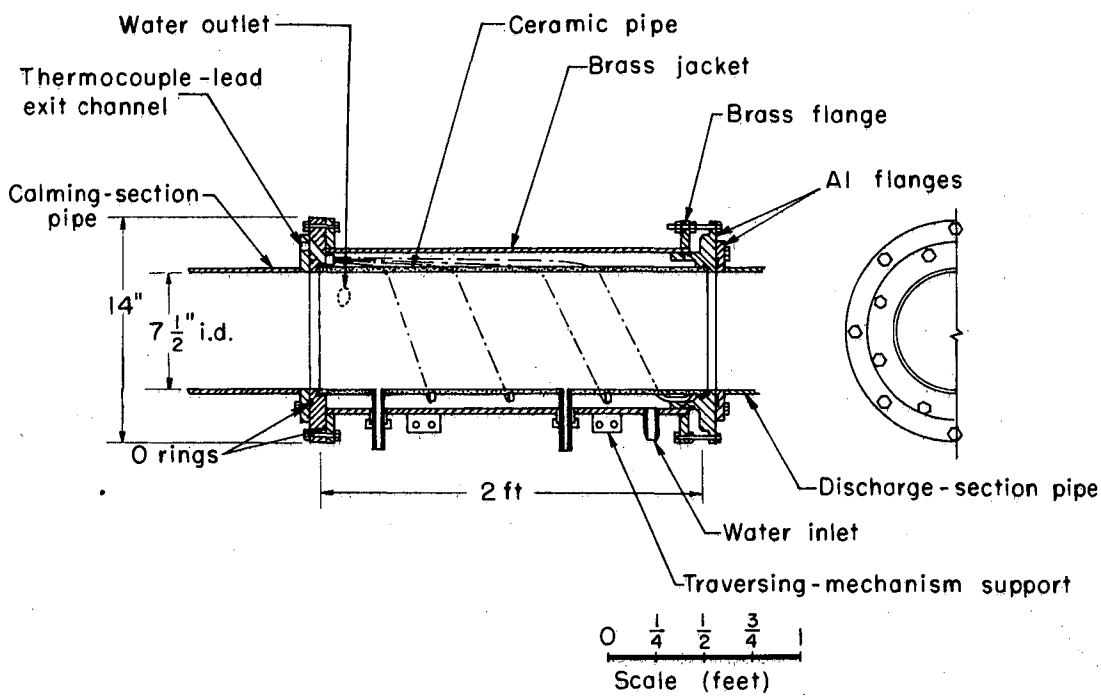

Fig. 32. Assembly drawing of test section.

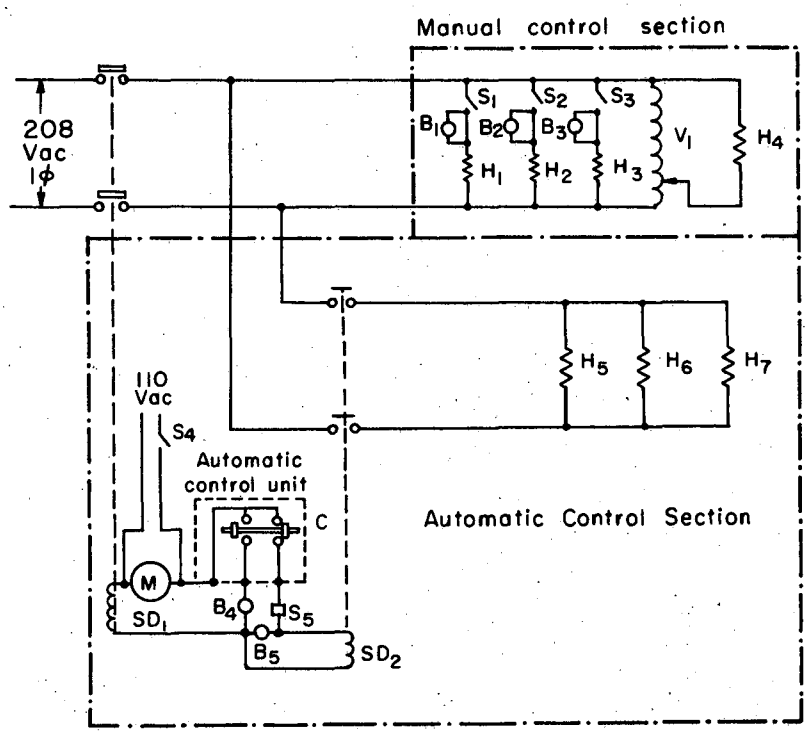

MU-34425

Fig. 33. Circuit diagram of air heater control and power supply.

B_1, B_2, B_3	Indicator bulbs for heaters 1, 2 and 3
B_4	Red indicator bulb—controlled heaters off
B_5	Green indicator bulb—controlled heaters on
H_1 to H_7	Air heaters
M	Motor
S_1, S_2, S_3	Switches for heaters 1, 2 and 3
S_4	Motor switch
S_5	Overheating cutout switch
SD_1, SD_2	Solenoids
V	Variac

REFERENCES

1. R. C. Cairns and G. H. Roper, Chem. Eng. Sci. 3, 97 (1954).
2. S. Corrsin, Rev. Sci. Instr. 18, 469 (1947).
3. S. Corrsin, NACA TN 1864 (1949).
4. H. L. Dryden, NACA Technical Report No. 562 (1936).
5. R. G. Folsom, Trans. ASME 78, 1447 (1956).
6. E. R. Gilliland and T. K. Sherwood, Ind. Eng. Chem. 26, 516 (1934).
7. F. K. Harris, Electrical Measurements (John Wiley and Sons Inc., New York, 1952) Chapter 7.
8. J. O. Hinze, Turbulence (McGraw-Hill Book Co., Inc., New York, 1959) Chapter 2.
9. C. D. Hodgman, ed., Handbook of Physics and Chemistry (Chemical Rubber Publishing Co., Cleveland, Ohio, 1958).
10. L. J. Hov, University of California Radiation Laboratory Report, UCRL-3405, June 1959.
11. F. Kennelly, Trans. AIEE 28, 363 (1909).
12. L. V. King, Phil. Trans. Roy. Soc. (London), series A 214, 373 (1914).
13. L. V. King, Phil. Mag., series 6 29, 556 (1915).
14. A. Linford, Flow Measurement and Meters (E. and F. Spon Inc., London, 1949).
15. H. H. Lowell, NACA TN 2117 (1950).
16. H. J. Merk, Appl. Sci. Res. A8, 237 (1959).
17. H. J. Merk, Appl. Sci. Res. A8, 261 (1959).
18. W. H. McAdams, Heat Transmission (McGraw-Hill Book Co., Inc., New York, 1954).
19. H. S. Mickley, R. C. Ross, A. L. Squyers and W. E. Stewart, NACA TN 3208 (1954).
20. R. H. Moore and R. K. Zeigler, Los Alamos Scientific Laboratory Report No. LA-2367 (1960).
21. R. M. Olsen and E. M. Sparrow, A.I.Ch.E. Journal 9, 766 (1963).
22. H. Schlichting, Boundary Layer Theory (McGraw-Hill Book Co., Inc., New York, 1960) 4th ed., Chapter XIII.

23. W. G. Spangenburg, NACA TN 3381 (1955).

24. D. B. Spalding, Int. J. Heat and Mass Transfer 2, 15 (1961).

25. D. B Spalding and H. L. Evans, Int. J. Heat and Mass Transfer 2, 199 (1961).

26. R. F. Stearns, R. R. Johnson, R. M. Jackson and C. A. Larson, Flow Measurement with Orifice Meters (Van Nostrand Co.,Inc., New York, 1951).

27. O. E. Tewfik, AIAA Journal 1, 1307 (1963).

28. B. G. Van der Hegge Zijnen, Appl. Sci. Research 6A, 129 (1956).

29. D. T. Wasan, C. L. Tien and C. R. Wilke, A.I.Ch.E. Journal 9, 567 (1963).

30. D. T. Wasan, Analysis of Gas-Phase Mass Transfer into Turbulent Flow, Ph.D. Thesis, University of California, Berkeley, 1964.

31. J. B. Willis, Australian Council for Aeronautics Report ACA-19, (1945).

32. S. W. Yuan, J. Math and Phys. 38, 166 (1959).

This report was prepared as an account of Government sponsored work. Neither the United States, nor the Commission, nor any person acting on behalf of the Commission:

A. Makes any warranty or representation, expressed or implied, with respect to the accuracy, completeness, or usefulness of the information contained in this report, or that the use of any information, apparatus, method, or process disclosed in this report may not infringe privately owned rights; or

B. Assumes any liabilities with respect to the use of, or for damages resulting from the use of any information, apparatus, method, or process disclosed in this report.

As used in the above, "person acting on behalf of the Commission" includes any employee or contractor of the Commission, or employee of such contractor, to the extent that such employee or contractor of the Commission, or employee of such contractor prepares, disseminates, or provides access to, any information pursuant to his employment or contract with the Commission, or his employment with such contractor.