UCRL-11571

University of California

Ernest O. Lawrence Radiation Laboratory

CRYOSTAT FOR TENSION TESTING IN THE TEMPERATURE RANGE 4° TO 300°K

TWO-WEEK LOAN COPY

This is a Library Circulating Copy which may be borrowed for two weeks. For a personal retention copy, call Tech. Info. Division, Ext. 5545

Berkeley, California

DISCLAIMER

This document was prepared as an account of work sponsored by the United States Government. While this document is believed to contain correct information, neither the United States Government nor any agency thereof, nor the Regents of the University of California, nor any of their employees, makes any warranty, express or implied, or assumes any legal responsibility for the accuracy, completeness, or usefulness of any information, apparatus, product, or process disclosed, or represents that its use would not infringe privately owned rights. Reference herein to any specific commercial product, process, or service by its trade name, trademark, manufacturer, or otherwise, does not necessarily constitute or imply its endorsement, recommendation, or favoring by the United States Government or any agency thereof, or the Regents of the University of California. The views and opinions of authors expressed herein do not necessarily state or reflect those of the United States Government or any agency thereof or the Regents of the University of California.

Submitted for publication in
Rev. Sci. Instr.

UCRL-11571

UNIVERSITY OF CALIFORNIA

Lawrence Radiation Laboratory
Berkeley, California

AEC Contract No. W-7405-eng-48

CRYOSTAT FOR TENSION TESTING IN THE TEMPERATURE RANGE 4° TO 300°K

G. U. Behrsing and L. R. Lucas

July 17, 1964

CRYOSTAT FOR TENSION TESTING IN THE TEMPERATURE RANGE 4° TO 300°K*

G. U. Behrsing and L. R. Lucas

Lawrence Radiation Laboratory
University of California
Berkeley, California

July 17, 1964

ABSTRACT

A cryostat with a load capacity of 10 000 lb has been designed for use with standard tensile testing equipment in the temperature range 4° to 300°K. Specimens up to 5 in. long can be mounted easily on the grip rods through an opening in the front of the test chamber. A liquid-helium transfer line has been developed for use with the tensile cryostat. The addition of a bayonet-type valve, which also serves as a coupling of two separate sections, makes this line quite versatile for a wide range of transfer operations. The cryostat is used in conjunction with a 10 000-lb Instron tension testing machine containing a stress-strain recorder and strain pacer.

I. INTRODUCTION

In recent years an increasing need for information concerning the properties of materials at low temperatures has developed. Tensile studies, at these low temperatures in particular, have made important contributions to understanding of the basic mechanisms governing the flow and fracture properties of engineering materials that may be used in low-temperature installations.

Many tensile cryostats are described in the literature.[1-5] In most of these systems the test chamber has to be moved out of the way when the specimen is being mounted on the grip rods or removed after the test. To avoid this difficulty, a cryostat has been designed which permits easy access to the specimen holders inside the chamber through an opening in the front. This feature is particularly of value with tensile tests that incorporate consecutive low- and high-temperature tension steps with intermediate metallurgical treatment of the specimen.

This paper describes an easily constructed and sturdy cryostat for use with standard tensile testing machines. Test specimens up to 5 in. long can be accommodated. They may be stressed in the temperature range from room temperature down to 4°K by using liquid helium, liquid nitrogen, or their cold vapors as refrigerants, without the use of external heat exchangers. The cryostat is designed to withstand tension forces up to 10 000 lb and is used with a 10 000-lb Instron tension testing machine that contains a stress-strain recorder and strain pacer.

The liquid-helium transfer line with vacuum insulation and a bayonet-type valve which serves as a joint of two separate sections of the line and facilitates installation are also discussed.

II. DESCRIPTION OF THE APPARATUS

The basic design of the cryostat is shown in Figs. 1 through 3. The inner test chamber is insulated by sections of Styrofoam from the surrounding heat shield, which is at liquid-nitrogen temperature for tests below 77°K. This shielding, in turn, is separated thermally from the outer housing by additional Styrofoam material. The insulation is coated with epoxy resin to prevent increase in its conductivity by diffusion of helium gas into the cell structure, which would displace the blowing agent. The cryostat housing and the heat shielding, as well as the coolant reservoir located on one side of the chamber, are rectangular and are constructed of aluminum alloy.

The test chamber is accessible from the front through removable sections of insulation and doors on the housing and shielding. This arrangement permits mounting and removal of test specimens without removing the cryostat.

The reservoir supply tube incorporates a metal-to-metal seal. The sharp edge of the stainless steel flange bites into the softer aluminum alloy when the screws are tightened. The seal is still perfect after the metals contract at low temperatures if the screws are long enough to provide the necessary elasticity.

Cartridge-type grip-rod assemblies (which can be easily removed from the test chamber) provide the pull on the specimen. Sealing between the housing and the grip rods is provided by a bellows arrangement on top and a dynamic O-ring seal on the bottom. The rods are thermally connected to the heat shield by movable links with close tolerances. The temperature difference across the gas gap is quite small, indicating effective heat shielding.

The grip rods consist of thick-walled and high-strength stainless steel tubing which accommodates a small cartridge heater and thermocouple wires. The heat shielding as well as the grip-rod assemblies can be heated to room temperature in a short time after completion of the tensile test, by means of heaters. Additional small heaters and thermostats are provided on the grip-rod flanges and bottom flange of the housing to prevent the O rings from freezing and the apparatus from frosting up. An added feature of the hollow grip rod is the provision for cooling the tube on the inside as well as the outside by the cold exhaust gas, thus intercepting a larger amount of conducted heat. Specimen shields on the grip rods contain the cryogenic fluid and assure economical cooling.

Figure 4 is a diagrammatic view of the liquid-helium transfer line, which is also used for the transfer of liquid nitrogen for tensile tests above 77°K. It consists of three parts: the distributor, the cryostat section, and the dewar section.

The distributor is located inside the cryostat and consists of a thin-walled stainless steel tube of small diameter with a number of perforations through which refrigerant is blown against the specimen. It is connected and sealed to the cryostat section by a tapered-flange fit and nut.

The cryostat section contains a thin-walled stainless steel tube assembly encased in a vacuum jacket. The section is bolted at the bottom flange to the wall of the cryostat in a fixed vertical position. The top flange has a right-handed thread and accepts the nut that operates the bayonet-type valve. A vacuum pumpout for the jacket is provided on the bottom flange, incorporating a safety relief valve to prevent the transfer line from being damaged in case a leak should develop in the vacuum jacket. The copper-tube section of the vacuum jacket is connected thermally to the heat shield in the cryostat by

a gas gap with close tolerances. Thus it serves as radiation shield as well as cold terminal on the bayonet-joint tube. A bellows between the copper tube and the bottom flange serves to relieve stresses in the tube caused by thermal dimensional changes in the transfer line.

The dewar section consists of a thin-walled stainless steel inner tube, vacuum jacketed by sections of larger-diameter stainless steel tubing. Spiral-shaped spacers, made of strips of thin stainless steel sheet, are soldered to the outside of the inner tube at critical locations in order to prevent the cold tube from touching the warm outer tube during transfer. This section of the transfer line, having two 90-deg bends, has both ends facing the same way to facilitate "stabbing" the cryostat section and the refrigerant dewar simultaneously during the connection operation. The end of the connector to be coupled to the cryostat section is a stainless steel tube, soldered to a tapered flange, and represents the stem of the bayonet-type valve. A Teflon washer serves as the stem tip. The two concentric tubes of the valve fit fairly closely, otherwise sealing by a Teflon O ring would prove impossible. Their low cross-section areas make them efficient heat necks and result in a saving of liquid helium. Sealing at the warm end of the valve is provided by a rubber O ring. The flange above the valve stem has a left-handed thread for the nut which opens and closes the valve. This flange also contains a pumpout with a safety relief valve for the vacuum jacket of the dewar section. The bellows in this section is used for thermal stress relief. A sliding dewar seal assembly allows the valve to be opened and closed without disturbing the connection between the transfer line and the dewar. It also adjusts readily to any small variation in height of different dewars.

Temperature of the specimen is controlled by automatic regulation of the flow of refrigerant into the test chamber. This is achieved by varying the pressure differential between that in the refrigerant supply dewar and the back pressure in the chamber to obtain the desired flow. The temperature control apparatus is similar to one described by Wessel,[1] consisting of a temperature controller-recorder, a dc amplifier, a potentiometer, and thermocouple leads with a constant-temperature bath.

Control panels, located at both sides of the cryostat, contain the exhaust manifold and associated valves and gauges.

III. TEST PROCEDURE

The cryostat is supported from the fixed crosshead of the tensile testing machine in a carefully adjusted position insuring free movement of both grip rods. The top grip rod is connected to the load cell on top of the fixed crosshead, and the bottom grip rod is fastened to the movable crosshead. The cryostat section of the liquid helium transfer line is bolted to the back of the test chamber, and the distributor inside the chamber is clamped to that section.

After the cryostat has been opened by removing the doors and sections of insulation, the specimen shields are lowered and the test specimen is mounted on the grip rods and pinned to the holders. Then the shields are raised in place again, and care is taken to screw the shield seal nut tightly against the collar of the bottom grip rod. The bottom shield, in turn, is screwed tightly against the nut to prevent leakage of liquid refrigerant through the threads.

Now the test chamber is closed and the liquid helium transfer line is connected to the pre-positioned refrigerant dewar and the stationary section on the cryostat by "stabbing" both of them simultaneously from

above in a vertical motion. The bayonet joint gives rotational (large) movement, while the flexible bellows above the dewar neck gives translational (small) movement to compensate for small differences in position of the dewar. During the cool-down period of the cryostat the bayonet-type valve on the line remains closed until liquid transfer is required. A moderate vacuum is being pulled on the test chamber to eliminate as much air and moisture as possible. Then filling of the shielding reservoir with liquid nitrogen is followed by direct addition of liquid nitrogen to the inner test chamber. For tensile tests below liquid nitrogen temperature, the nitrogen is removed by evacuation after cool-down of the chamber to 77°K has been completed. Then helium gas is admitted to the cryostat to flush the residual nitrogen gas, and a vacuum is pulled once more. Next the liquid helium is moved from the storage dewar to the precooled test chamber by imposing a slight overpressure (2 to 3 ounces) on the surface of the liquid by means of bottled, pure helium gas and by opening the valve in the transfer line by means of the valve nut, which has right- and left-handed threads. Heat is extracted from the internal components of the chamber by vaporization of the liquid and change in enthalpy of the gas as it rises to its exhaust temperature. The manual valve on the manifold is open during this time for rapid exhaust of large volumes of gas warmed in the initial cool-down. As the desired temperature is approached, the manual valve is closed, leaving only the small solenoid valve open. The tensile test may be started when the predetermined temperature is reached.

Upon completion of the experiment, the flow of cryogenic liquid is discontinued, and the heaters are turned on to warm the test chamber to room temperature. The warm chamber may then be opened and the specimen removed.

The cryostat is fairly economical in the consumption of refrigerating liquid. For tensile experiments at 4°K about 4 to 6 liters of liquid helium are used, which includes both the liquid consumed due to transfer losses and that due to boil-off. At higher test temperatures the consumption of cryogenic liquid is proportionally less because of lower heat influx and the ability of the cold gas to absorb heat.

ACKNOWLEDGMENTS

The authors wish to express their gratitude to Dr. Jim Mote and Dr. Frank Hauser for their helpful discussions of the design. We also would like to thank Les Seaborn for his able supervision of the construction and assembly of the cryostat. Honors are due the people at the assembly shop of the Lawrence Radiation Laboratory for their excellent work in building the liquid-helium transfer line.

FOOTNOTE AND REFERENCES

*Work done under the auspices of the U. S. Atomic Energy Commission.

1. E. T. Wessel, ASTM Bulletin No. 211, 40 (1956).
2. R. M. McClintock and K. A. Warren, Materials Research and Standards, ASTM 1, [2], 95 (1961).
3. J. F. Watson and J. L. Christian, Materials Research and Standards, ASTM 1, [2], 87 (1961).
4. R. P. Reed, Adv. Cryogenic Eng. 7. 448 (1962).
5. T. S. Desisto and L. C. Carr, Adv. Cryogenic Eng. 6, 577 (1961).

FIGURE CAPTIONS

Fig. 1. Cross-sectional side view of cryostat. A, housing; B, housing door; C, heat shield; D, heat shield door; E, specimen shields; F, shield seal nut; G, grip rod; H, specimen holder; I, specimen; J, grip-rod support; K, wire exit; L, coolant exhaust; M, liquid nitrogen fill tube; N, heater and thermostat; O, heater; P, Styrofoam.

Fig. 2. Cross-sectional top view of cryostat without grip-rod assemblies.

Fig. 3. Photograph of the cryostat in place on the tensile tester. The doors and insulation sections are removed and the test specimen is shown mounted on the grip rods.

Fig. 4. Cross-sectional view of liquid helium transfer line. A, distributor; B, cryostat section; C, dewar section; D, valve nut; E, dewar seal nut; F, dewar seal; G, Teflon O ring; H, Teflon valve seat; I, bayonet-type valve; J, heat shield; K, vacuum and relief valve; L, pressurizing valve; M, spiral-shaped spacer.

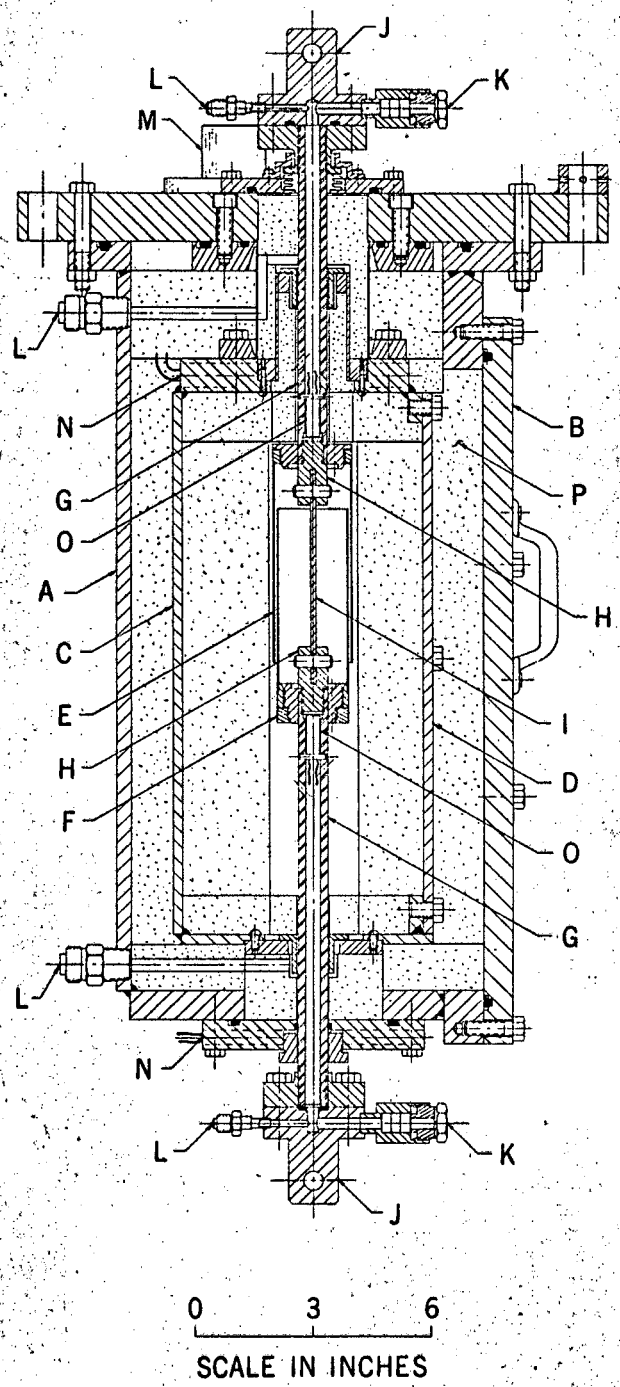

Fig. 1.

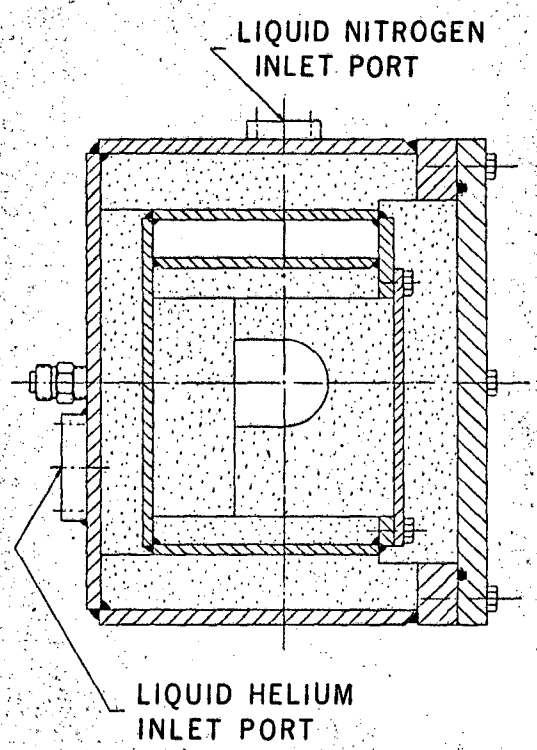

Fig. 2

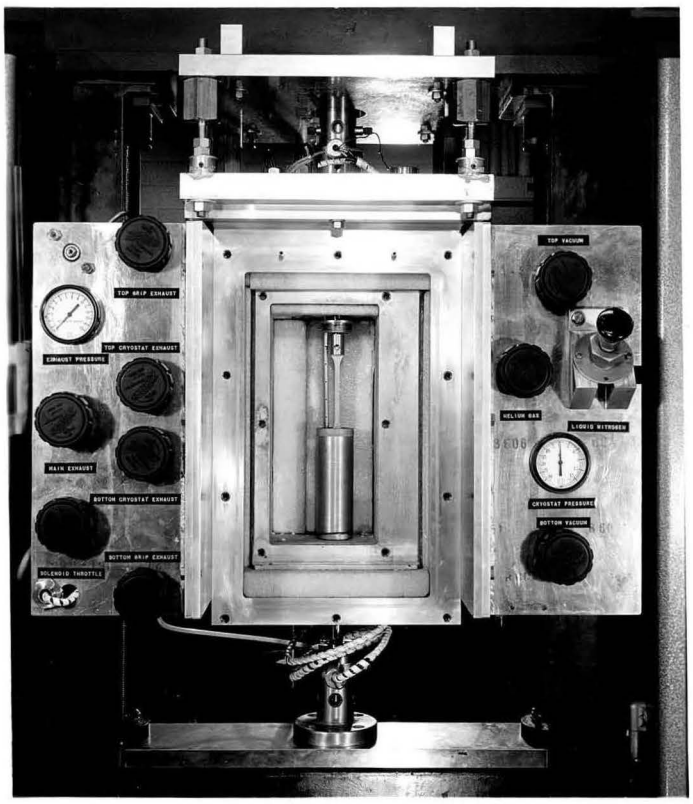
TOP GRIP EXHAUST
TOP CRYOSTAT EXHAUST
EXHAUST PRESSURE
MAIN EXHAUST
BOTTOM CRYOSTAT EXHAUST
BOTTOM GRIP EXHAUST
SOLENOID THROTTLE
TOP VACUUM
HELIUM GAS
LIQUID NITROGEN
CRYOSTAT PRESSURE
BOTTOM VACUUM

Fig. 3

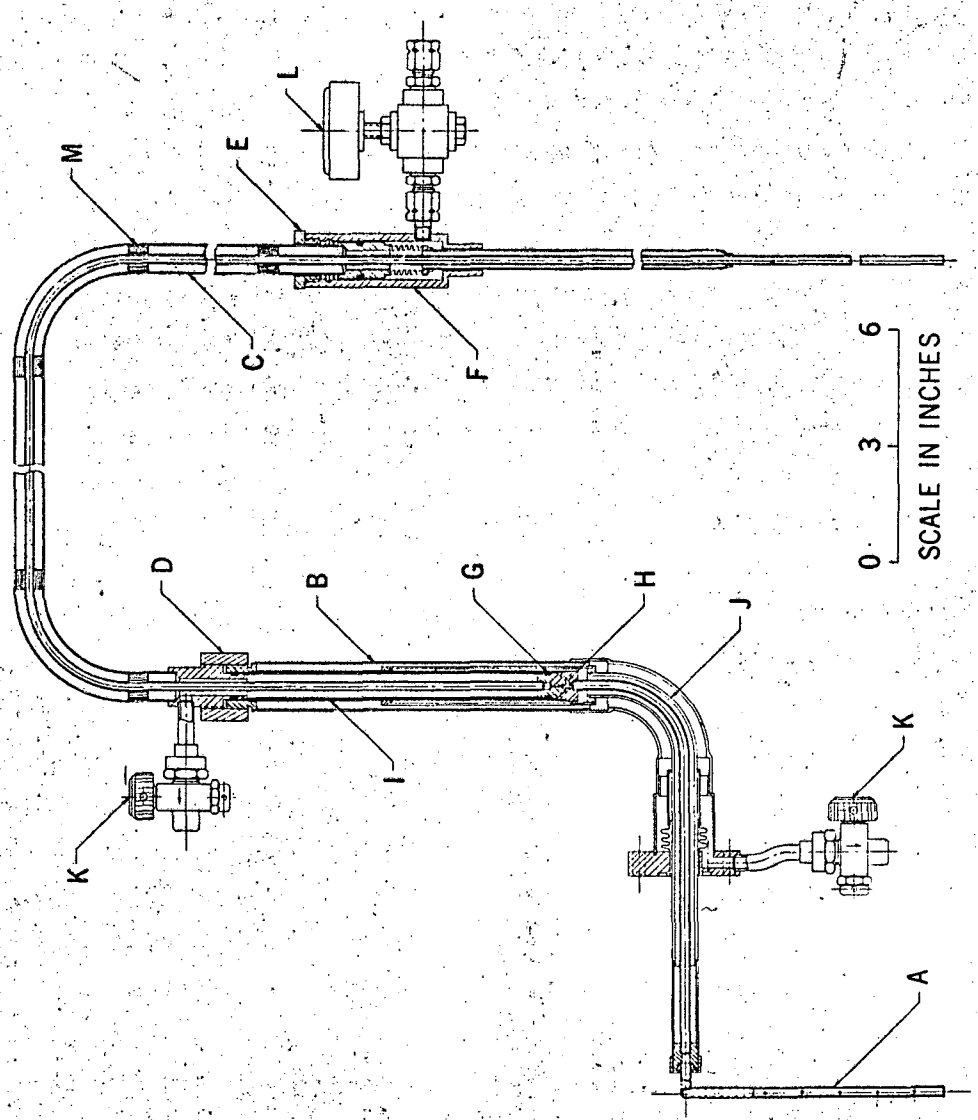

Fig. 4