University of California

Ernest O. Lawrence Radiation Laboratory

TWO-WEEK LOAN COPY

This is a Library Circulating Copy which may be borrowed for two weeks. For a personal retention copy, call Tech. Info. Division, Ext. 5545

CRYOSTAT FOR TENSION TESTING IN THE TEMPERATURE RANGE 4° to 300°K

Berkeley, California

DISCLAIMER

This document was prepared as an account of work sponsored by the United States Government. While this document is believed to contain correct information, neither the United States Government nor any agency thereof, nor the Regents of the University of California, nor any of their employees, makes any warranty, express or implied, or assumes any legal responsibility for the accuracy, completeness, or usefulness of any information, apparatus, product, or process disclosed, or represents that its use would not infringe privately owned rights. Reference herein to any specific commercial product, process, or service by its trade name, trademark, manufacturer, or otherwise, does not necessarily constitute or imply its endorsement, recommendation, or favoring by the United States Government or any agency thereof, or the Regents of the University of California. The views and opinions of authors expressed herein do not necessarily state or reflect those of the United States Government or any agency thereof or the Regents of the University of California.

UCRL-11571 Rev. 1

UNIVERSITY OF CALIFORNIA

Lawrence Radiation Laboratory
Berkeley, California

AEC Contract No. W-7405-eng-48

CRYOSTAT FOR TENSION TESTING IN THE TEMPERATURE RANGE 4° TO 300°K

G. U. Behrsing and L. R. Lucas

July 17, 1964

CRYOSTAT FOR TENSION TESTING IN THE TEMPERATURE RANGE 4° TO 300°K

G. U. Behrsing and L. R. Lucas

Lawrence Radiation Laboratory
University of California
Berkeley, California

July 17, 1964

ABSTRACT

A cryostat with a load capacity of 10,000 lb has been designed for use with standard tensile testing equipment in the temperature range 4° to 300°K. Specimens up to 5 in. long can be mounted easily on the grip rods through an opening in the front of the test chamber. The cryostat is used in conjunction with a 10,000-lb Instron tension testing machine containing a stress-strain recorder and strain pacer.

I. INTRODUCTION

In recent years the need for information concerning the properties of materials at low temperatures has increased. Tensile studies, at these low temperatures in particular, have made important contributions to understanding of the basic mechanisms governing the flow and fracture properties of engineering materials that may be used in low-temperature installations.

Many tensile cryostats are described in the literature.[1-5] In most of these systems the test chamber has to be moved out of the way when the specimen is being mounted on the grip rods or removed after the test. To avoid this difficulty, a cryostat has been designed which permits easy access to the specimen holders inside the chamber through an opening in the front. This feature is particularly of value with tensile tests that incorporate consecutive low- and high-temperature tension steps with intermediate metallurgical treatment of the specimen.

This paper describes an easily constructed and sturdy cryostat for use with standard tensile testing machines. Test specimens up to 5 in. long can be accommodated. They may be stressed in the temperature range from room temperature down to 4° K by using liquid helium or liquid nitrogen, or their cold vapors, as refrigerants, without the use of external heat exchangers. Tensile samples cooled by gas rather than liquid, are more subject to localized specimen heating and consequent discontinuous slip, because of lower heat transfer rates; however, the impinging of cold vapor on a whole side of the test sample at high velocity tends to minimize these effects. The cryostat is designed to withstand tension forces up to 10,000 lb and is used with a 10,000-lb Instron tension testing machine that contains a stress-strain recorder and strain pacer.

II. DESCRIPTION OF THE APPARATUS

The basic design of the cryostat is shown in Figs. 1 through 4. The inner test chamber is insulated by sections of Styrofoam from the surrounding heat shield, which is at liquid-nitrogen temperature for tests below 77°K. This shielding, in turn, is separated thermally from the outer housing by additional Styrofoam material. The insulation has been cut to fit and then coated with epoxy resin. The epoxy coat retards the diffusion of coolant gas into the cell structure and consequent increase in thermal conductivity. The cryostat housing and the heat shielding, as well as the shielding reservoir located on one side of the chamber, are rectangular and are constructed of aluminum alloy.

The test chamber is accessible from the front through removable sections of insulation and doors on the housing and shielding. This arrangement permits mounting and removal of test specimens without removing the cryostat.

The reservoir supply tube (for coolant to the shield) shown in Fig. 2 incorporates a metal-to-metal seal. The sharp edge of the stainless steel flange bites into the softer aluminum alloy of the heat shield when the screws are tightened. The seal is still perfect after the metals contract at low temperature if the screws are long enough to provide sufficient elasticity.

Cartridge-type grip-rod assemblies (which can be easily removed from the test chamber) provide the pull on the specimen. Sealing between the housing and the grip rods is provided by a bellows arrangement on top and a dynamic O-ring seal on the bottom.

The grip rods consist of thick-walled and high-strength stainless steel tubing which accommodates a small cartridge heater and thermocouple wires to sense the sample temperature. The heat shielding, as well as the grip rod assemblies, can be brought to room temperature by means of the heaters in a short time after completion of the tensile test. Additional small heaters and

thermostats are provided on the grip rod flanges and bottom flange of the housing to prevent the O rings from freezing and the apparatus from frosting up. Brass specimen shields on the grip rods make a cup to contain the cryogenic fluid around the sample.

The cold exhaust gas vents from the cup through the annular space between the specimen shields, thus creating an environment around the sample at very near the test temperature. The gas flow then divides, and goes both inside and outside the grip rods. Since the flow of the exhaust gas is in the opposite direction to the heat flux along the grip rods, it makes the best use of the refrigerant capability of the cold vapor. The heat flux to the low-temperature region is also decreased by lowering the temperature gradient in this region: A portion of the heat flows from the grip rod, across a narrow gas gap to the thermal sleeve (see Fig. 2) and from there to the heat shielding.

The coolant distributor is located inside the specimen shields beside the test sample, as shown in Figs. 2 and 4. It consists of a thin-walled stainless steel tube of small diameter with a number of perforations through which refrigerant is blown against the specimen. A tapered-fit flange and nut connects and seals the distributor to the liquid helium transfer lines.

The temperature control apparatus is similar to one described by Wessel,[1] consisting of a temperature controller-recorder, a dc amplifier, a potentiometer, and thermocouple leads with a constant-temperature bath (which in our case is the liquid-nitrogen-filled heat shield). The thermocouples are attached directly to the specimen gage section as well as to the upper and lower sample grips. Control is effected by the upper thermocouple.

The coolant flow is initiated by pressurizing the refrigerant supply Dewar. The rate of flow is regulated on the warm or gas side of the system by varying the back pressure in the chamber first with a manual valve and then with a solenoid valve. The automatic temperature controller operates the solenoid valve and controls its on-off cycle.

Control panels, located at both sides of the cryostat, contain the exhaust manifold and associated valves and gauges, as shown in Fig. 4.

III. TEST PROCEDURE

The cryostat is supported from the fixed crosshead of the tensile testing machine in a carefully adjusted position insuring free movement of both grip rods. The top grip rod is connected to the load cell on top of the fixed crosshead, and the bottom grip rod is fastened to the movable crosshead. The cryostat section of the liquid helium transfer line is bolted to the back of the test chamber, and the distributor inside the chamber is clamped to that section. The liquid nitrogen transfer line is bolted to the inlet port shown in Fig. 2.

After the cryostat has been opened by removing the doors and the sections of insulation, the specimen shields are lowered and the test specimen is mounted on the grip rods and pinned to the holders. Then the shields are raised in place again and care is taken to screw the shield seal nut tightly against the collar of the bottom grip rod. The bottom shield, in turn, is screwed tightly against the nut to prevent leakage of liquid refrigerant through the threads.

Now the test chamber is closed and the liquid helium transfer line is connected to the prepositioned refrigerant Dewar and the stationary section on the cryostat. During the cool-down period of the cryostat the valve on the line remains closed until liquid transfer is required. A moderate vacuum is being

pulled on the test chamber to eliminate as much air and moisture as possible. Then filling of the shielding reservoir with liquid nitrogen is followed by direct addition of liquid nitrogen to the inner test chamber through the liquid nitrogen inlet port shown in Fig. 2. For tensile tests below liquid nitrogen temperature, the chamber is cooled to 77°K, the nitrogen is removed by evacuation, helium gas is admitted to the cryostat to flush the residual nitrogen gas, and a vacuum is pulled once more. Then the liquid helium is moved from the storage Dewar to the precooled test chamber by imposing a slight overpressure (2 to 3 oz. per in.^{2}) on the surface of the liquid by means of bottled, pure helium gas and by opening the valve in the transfer line. Heat is extracted from the internal components of the chamber by vaporization of the liquid and change in enthalpy of the gas as it rises to its exhaust temperature. The manual valve on the manifold is open during this time for rapid exhaust of large volumes of gas warmed in the initial cool-down. As the desired temperature is approached, the manual valve is closed, leaving only the small solenoid valve open. The tensile test may be started when the predetermined temperature is reached.

Upon completion of the experiment, the flow of cryogenic liquid is discontinued, and the heaters are turned on to warm the test chamber to room temperature. The warm chamber may then be opened and the specimen removed.

The cryostat is fairly economical in the consumption of refrigerating liquid. For tensile experiments at 4°K about 4 to 6 liters of liquid helium are used, which includes both the liquid consumed in transfer losses and that which boils off. At higher test temperatures the consumption of cryogenic liquid is proportionally less.

ACKNOWLEDGMENTS

The authors wish to express their gratitude to Dr. Jim Mote and Dr. Frank Hauser for their helpful discussions of the design. We also would like to thank Les Seaborn for his able supervision of the construction and assembly of the cryostat.

FOOTNOTE AND REFERENCES

*Work done under the auspices of the U. S. Atomic Energy Commission.

1. E. T. Wessel, ASTM Bulletin No. 211, 40 (1956).
2. R. M. McClintock and K. A. Warren, Materials Research and Standards, ASTM 1, [2], 95 (1961).
3. J. F. Watson and J. L. Christian, Materials Research and Standards, ASTM 1, [2], 87 (1961).
4. R. P. Reed, Adv. Cryogenic Eng. 7, 448 (1962).
5. T. S. Desisto and L. C. Carr, Adv. Cryogenic Eng. 6, 577 (1961).

FIGURE CAPTIONS

Fig. 1. Cross-sectional side view of cryostat. A, housing; B, housing door; C, heat shield; D, heat shield door; E, specimen shields; F, shield seal nut; G, grip rod; H, specimen holder; I, specimen; J, grip rod support; K, wire exit; L, coolant exhaust; M, reservoir supply tube; N, heater and thermostat; O, heater; P, Styrofoam insulation.

Fig. 2. Cross-sectional front view of cryostat. M, reservoir supply tube; O, heater; Q, thermostat; R, liquid nitrogen inlet port; S, coolant distributor; T, shielding reservoir; U, metal-to-metal seal; V, thermal sleeve.

Fig. 3. Cross-sectional top view of cryostat without grip rod assemblies.

Fig. 4. Photograph of the cryostat in place on the tensile tester. The doors and insulation sections are removed and the test specimen is mounted on the grip rods.

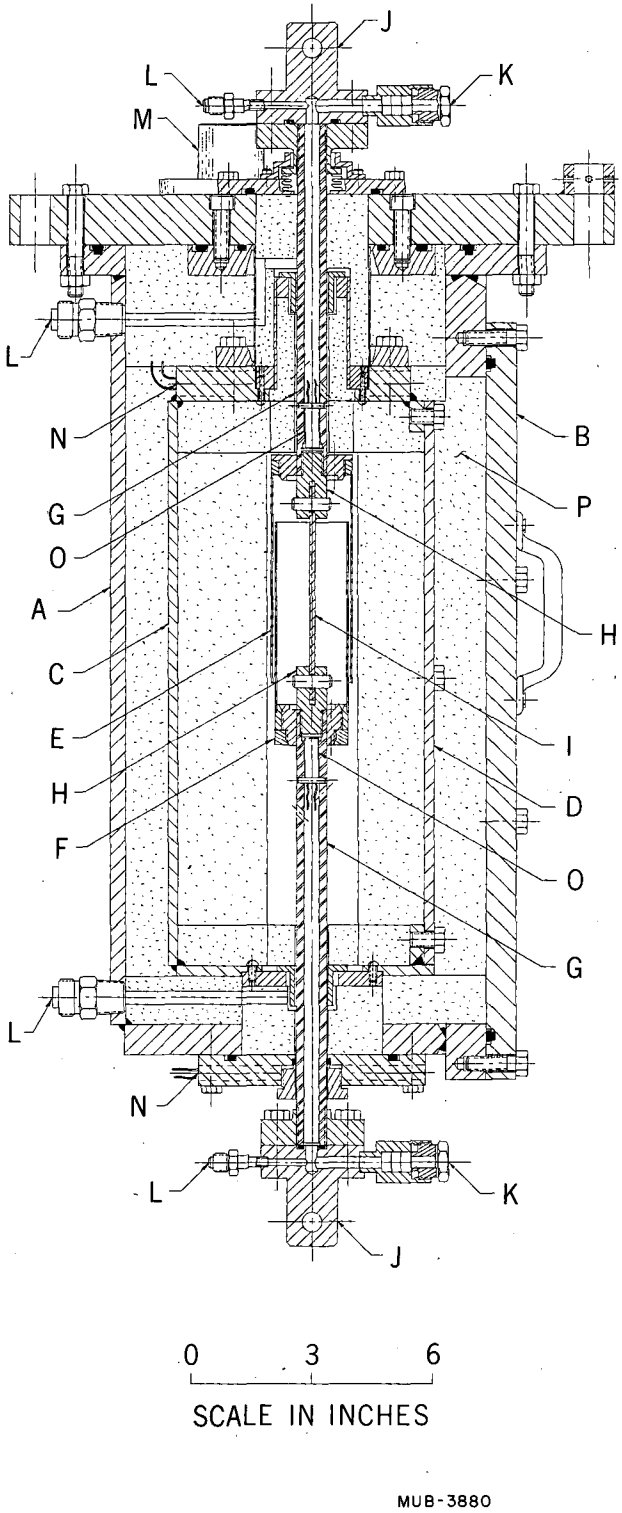

Fig. 1

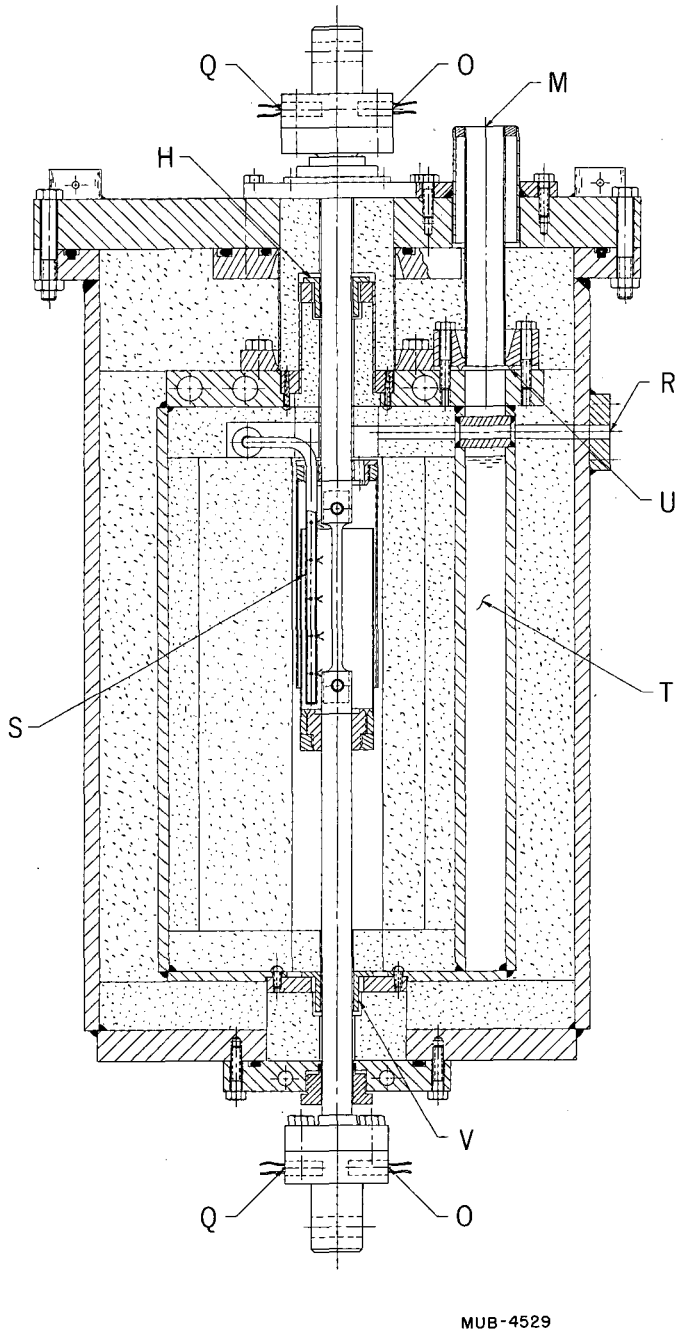

Fig. 2

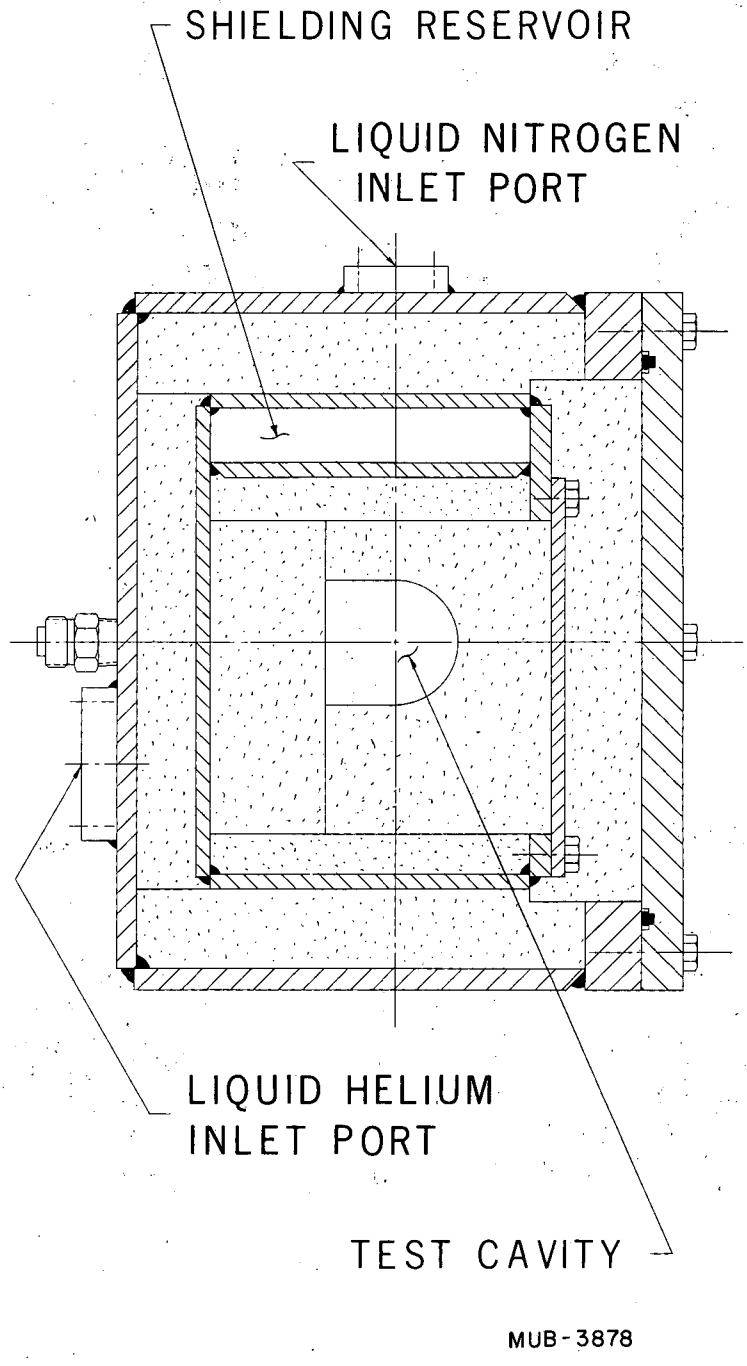
SHIELDING RESERVOIR
LIQUID NITROGEN
INLET PORT
LIQUID HELIUM
INLET PORT
TEST CAVITY
MUB-3878

Fig. 3

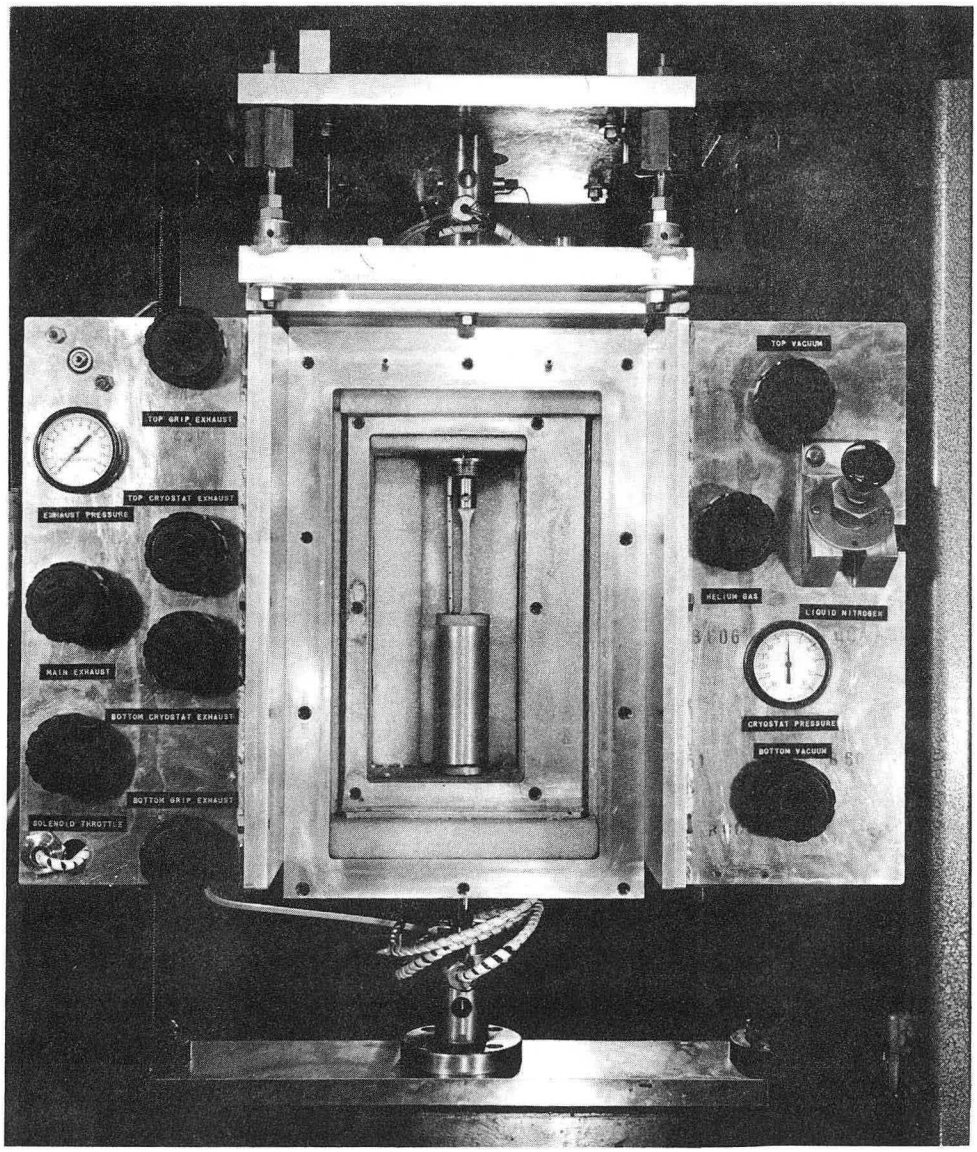
TOP GRIP EXHAUST
TOP CRYOSTAT EXHAUST
EXHAUST PRESSURE
MAIN EXHAUST
BOTTOM CRYOSTAT EXHAUST
BOTTOM GRIP EXHAUST
SOLENOID THROTTLE
TOP VACUUM
HELIUM GAS
LIQUID NITROGEN
CRYOSTAT PRESSURE
BOTTOM VACUUM

ZN-4557

Fig. 4

This report was prepared as an account of Government sponsored work. Neither the United States, nor the Commission, nor any person acting on behalf of the Commission:

A. Makes any warranty or representation, expressed or implied, with respect to the accuracy, completeness, or usefulness of the information contained in this report, or that the use of any information, apparatus, method, or process disclosed in this report may not infringe privately owned rights; or

B. Assumes any liabilities with respect to the use of, or for damages resulting from the use of any information, apparatus, method, or process disclosed in this report.
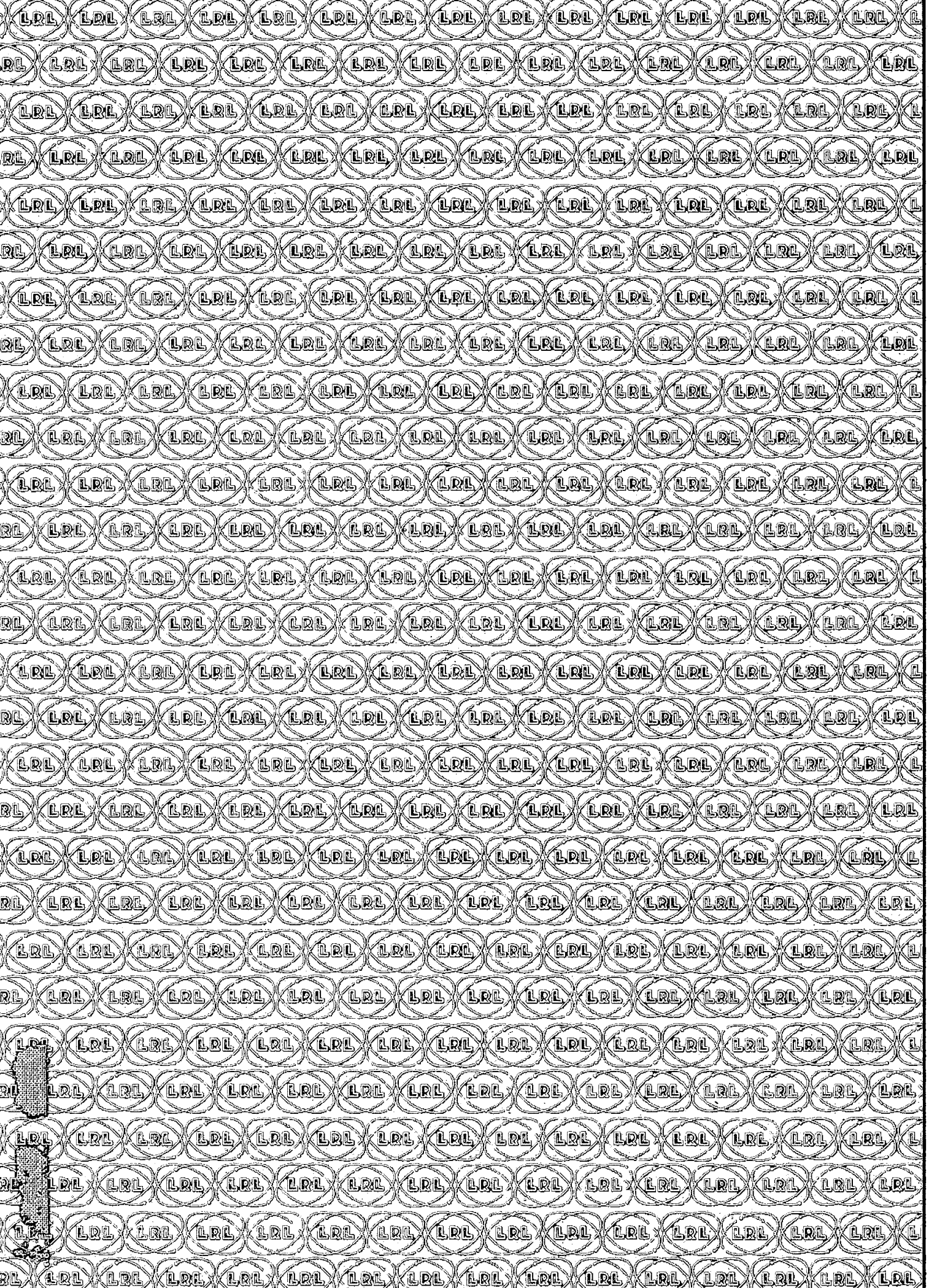
As used in the above, "person acting on behalf of the Commission" includes any employee or contractor of the Commission, or employee of such contractor, to the extent that such employee or contractor of the Commission, or employee of such contractor prepares, disseminates, or provides access to, any information pursuant to his employment or contract with the Commission, or his employment with such contractor.