UCRL-11702 c.2
UC-37 Instruments
TID-4500 (35th Ed.)

Research and Development

UNIVERSITY OF CALIFORNIA

Lawrence Radiation Laboratory
Berkeley, California

AEC Contract No. W-7405-eng-48

RECEIVED
LAWRENCE
BERKELEY LABORATORY

JUL 28 1975

LIBRARY AND
DOCUMENTS SECTION

INSTRUMENTATION MODULE SYSTEM

Dick A. Mack, Leo Schifferle, Clayton A. Van Den Heuvel

November 25, 1964

UCRL-11702 c.2

DISCLAIMER

This document was prepared as an account of work sponsored by the United States Government. While this document is believed to contain correct information, neither the United States Government nor any agency thereof, nor the Regents of the University of California, nor any of their employees, makes any warranty, express or implied, or assumes any legal responsibility for the accuracy, completeness, or usefulness of any information, apparatus, product, or process disclosed, or represents that its use would not infringe privately owned rights. Reference herein to any specific commercial product, process, or service by its trade name, trademark, manufacturer, or otherwise, does not necessarily constitute or imply its endorsement, recommendation, or favoring by the United States Government or any agency thereof, or the Regents of the University of California. The views and opinions of authors expressed herein do not necessarily state or reflect those of the United States Government or any agency thereof or the Regents of the University of California.

INSTRUMENTATION MODULE SYSTEM

Dick A. Mack, Leo Schifferle, Clayton A. Van Den Heuvel

Lawrence Radiation Laboratory
University of California
Berkeley and Livermore, California

November 25, 1964

Abstract

A versatile system of constructing modular plug-in units is described, together with its associated bin and interconnecting wiring. These units conform to the standard recently developed and adopted by the AEC Committee on Nuclear Instrument Modules.

Introduction

During the past ten years almost every research laboratory and instrumentation manufacturer has developed a system for packaging electronic circuits in modular form. The chief advantages of such a system are the ease of adaptation and interchangeability during the course of an experiment, the time saving effected when replacement is necessary, and the lower cost of updating or expanding various parts of the system.

Two types of modular construction have emerged: That used for computer-type logic circuits, which are designed for little or no local adjustment, control, or observation; and that used for instrumentation of experiments in which continuous observation and control are required. The latter type of packaging has taken on a myriad of forms, each a little different. Only a few characteristics are common to all units: The modules have

1. a front panel,
2. a component mounting board,
3. power or signal connector(s), or both, in the rear, and
4. a method for a bin which in turn can be mounted in a standard 19-in. relay rack.

Beyond this, the interchangeability ceases in practically every case.

An AEC Committee for Nuclear Instrument Modules was formed in February 1964 by representatives of the National Laboratories with the objective of producing a standard module and bin design. By July 1964 a basic design, providing for mechanical and electrical power interchangeability, was adopted. The basic system was described in an AEC report Louis Costrell, Standard Nuclear Instrument Modules, TID-20893, July 1964.

The following report describes a particular design of modules and bins which conforms to the national standard. Another conforming method of construction is being developed at Oak Ridge National Laboratory by George Holt and his associates. Modules constructed by either of these (or any other method of construction conforming to the national standard) may be used interchangeably in any bin designed to the national standard.

Modules are available in two panel heights, nominally 5-1/4 and 8-3/4 in. high. Panel widths are in nominal multiples of 1.35 in., with accommodation for twelve single-width modules in the bin. Also, a 5-1/4-in. module can plug into a 8-3/4-in.-high bin by using an adapter plate.

The system was designed with a view to maximum utilization of the volume available in a 19-in. relay rack. The bin has the maximum width that can be accommodated in a rack if two chassis slides are used. The module has been designed for maximum utilization of the bin by providing:

1. Use of maximum volume within the bin for components and circuit boards.
2. Maximum panel space for mounting controls or connectors.
3. Convenient method of supplying power to modules.
4. The option of "wired-in" interconnections between modules via wires or coaxial cables.

5. Easy accessibility to both sides of component board by removable covers.
6. Adequate shielding under normal laboratory noise conditions.
7. Optional additional shielding for use under conditions of high ambient noise, e.g., near spark chambers.
8. Adequate natural convection cooling for low-dissipation installations, with option of forced-air cooling for use at high ambient temperatures.
9. Protection of components from mechanical damage.
10. Economical fabrication consistent with the above requirements.
11. Availability of panel space at the rear of the unit to allow the use of rear or front connections between modules.

Photographs of the modules and bins are shown in Figs. 1 through 4. Other illustrations are shown in the following groups:

Group I. Application drawings and schematic diagrams.
Group II. Construction drawings for 5-1/4-in. modules of various widths.
Group III. Construction drawings for 5-1/4-in. instrumentation bin.
Group IV. Construction drawings for 8-3/4-in. instrumentation module.
Group V. Construction drawings for 8-3/4-in. instrumentation bin.

Electrical Considerations

A prerequisite for electrical compatibility of the system is availability of adequate power, at each module location, of several specified voltages. The potentials of ±12 and ±24 volts have been selected as standard and will be available for all modules. Other preferred voltages (e.g., ±3 and 6V) are available at the user's option. Connection between modules and bins is made via a 42-pin connector mounted at the rear of the module and bin; this "utility" connector, using high-reliability, snap-in-type contacts, allows the use of up to 36 pins and 6 coaxial connections. See Fig. 5.

Signal connections will, in general, be made through coaxial connectors on the front or rear of a module. However, when interconnections are desired between modules in a bin, they can be made by inserting the appropriate leads or coaxial contacts in the utility connector housings. Some pin locations have been assigned by the Committee for a particular use, others are available at the user's option. A list of assignments is shown in Fig. 6.

Bins will initially be wired with only the ±12, ±24, and signal ground and chassis ground wiring as shown in Fig. 7. Additional wiring can be easily added as needed by use of the snap-in connector pin feature. If desired, pins can likewise be readily removed by use of a tool provided for that purpose.

The maximum resistance drop between the power supply and any bin utility connector should not exceed 19 milliohms. Where this drop is excessive, the power supply remote voltage-sensing leads can be extended to a set of utility connector buses, as shown in Fig. 8. In this configuration the maximum resistance drop between the bin utility connectors and the remote sensing point should not exceed 2 mΩ.

Generally, the wiring between the twelve utility connectors, shown in Fig. 2, will be enclosed in a metal shield affixed to the rear of the bin. This will take the form of either a rear cover (Fig. 9) or a shielded enclosure in a rear-mounting power supply (Fig. 10). In applications in which it is desirable to extend leads from the bin connectors to other chassis, this should be through connectors permanently attached to the rear cover (Fig. 9).

Power Supply

Power can be supplied to the bin by any of three methods.

(a) For light loads it may be convenient to construct power supplies in the form of modules plugging into the front of the bin. Power to the other modules is provided through the rear connectors.

(b) For heavier loads a power supply can be affixed to the rear of the bin. Power supplies are commercially available in this configuration which will supply ±12 and ±24 volts each at 1 ampere with ±0.05% combined line and load regulation. The total volume for these supplies is shown in Fig. 10.

(c) A third method of supplying power is from a supply located remotely from the bin and fed through a power connector located on the bin rear shield (Fig. 9).

Several options for ac power control are available. For supplies plugged into the front of bins, switches and indicators can be mounted on the module panels. For supplies attached to the rear of bins, a power control module can be employed as seen in the photograph of Fig. 4 and the schematic diagram of Fig. 11. If front panel control is not required, ac power can be fed directly to the supply at the rear of the bin.

Shielding

Many early bin-module designs did not provide adequate shielding from the electromagnetic radiation present in average laboratory surroundings. In this design shielding is dependent upon the construction of the module rather than of the bin. The top and bottom bin cover plates are primarily for component protection.

Under normal laboratory noise conditions it is usually sufficient to construct modules of aluminum finished with a protective conductive coating such as Iridite. The interconnections between modules should be shielded as described above, with all external signal connections introduced through shielded cable and all power leads fed through suitable line filters.

Where high ambient electrical noise is present--e.g., rf power sources or spark discharges--a number of additional shielding features can easily be added to the modular system. These are pictorially outlined in Fig. 12. In the modules, additional contact-strip material should be mounted along the sides of the front and rear panels to provide good contact to the side panels (see Fig. 13). The most economical method of plating aluminum with a base material to provide low contact resistance over a long period of time is by the use of an "Electroless" nickel solution. Resistances of 3 mΩ between the corner and sliding cover were measured when this technique was

used. A thickness of 0.0001 in. appears to be adequate for this purpose. Additional plating of other materials can be added as needed.

The utility connectors are shielded by mounting metal hoods around the utility connectors on both the bin and modules, as shown in Fig. 12 The external hood mounted on the bin has fingers to engage the internal hood when mated. The contact resistance between cadmium-plated steel hoods is a few mΩ. To maintain the integrity of the shielding, a crushed metal-wire gasket should be used around the perimeter of the utility-connector rear panel and the attached shield or power supply.

Mechanical Considerations

Sheet metal, extruded aluminum, and die-cast parts are employed in construction of this bin-module system. This combination of materials produces a high-quality system at moderate cost. However, as usage of this system increases, it is expected that further construction refinements and larger production volume will effect considerable savings.

Acknowledgments

This development represents the contributions of many individuals. We wish to thank fellow members of the Committee and the Chairman, Louis Costrell, in particular for the many hours of patient advice and constructive criticism during the evaluation of the present design.

The contributors at the Lawrence Radiation Laboratory are too numerous to list individually; however, Fred Goulding and A. E. Larsh, Jr., have continuously supported the program with their counsel and ideas. Robert Crowe has drawn the majority of the construction drawings.

This work was done under the auspices of the U. S. Atomic Energy Commission.

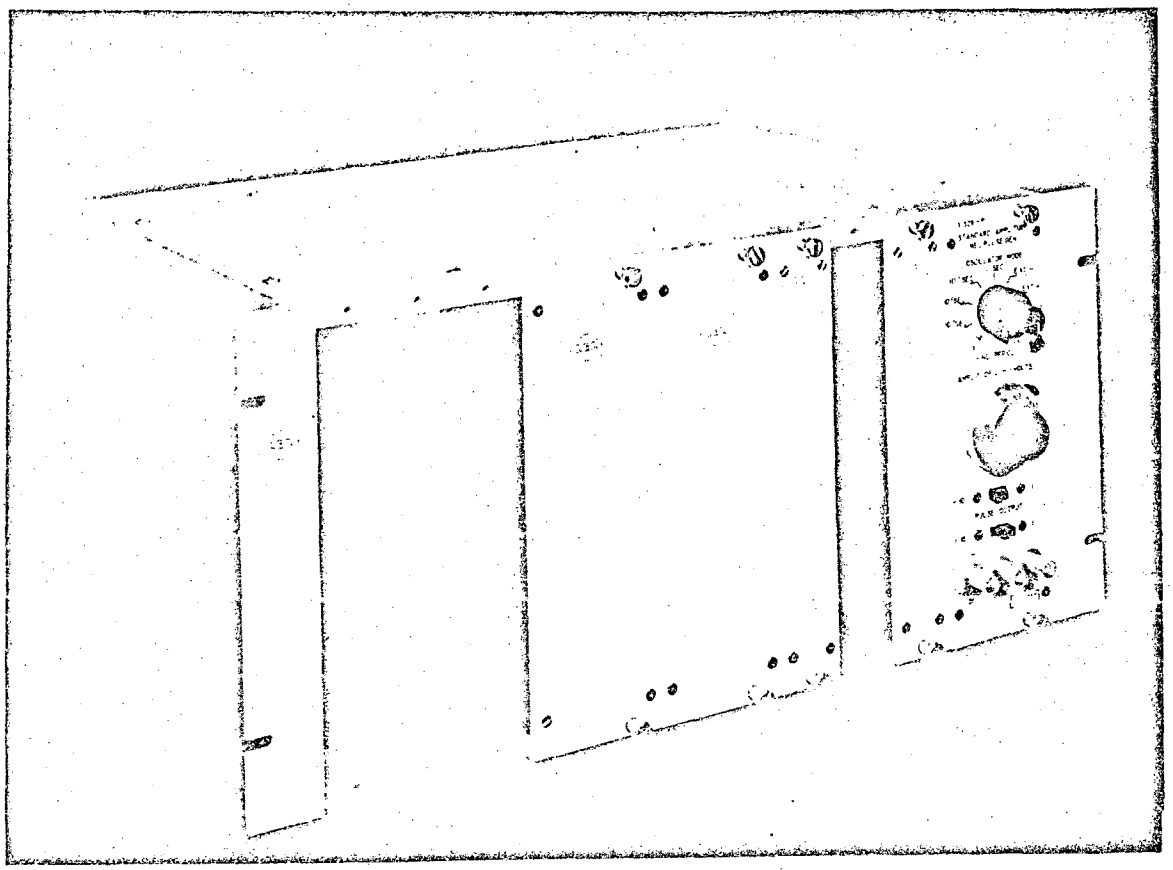

ZN-4570

Fig. 1. Front view of 8-3/4-in. bin.

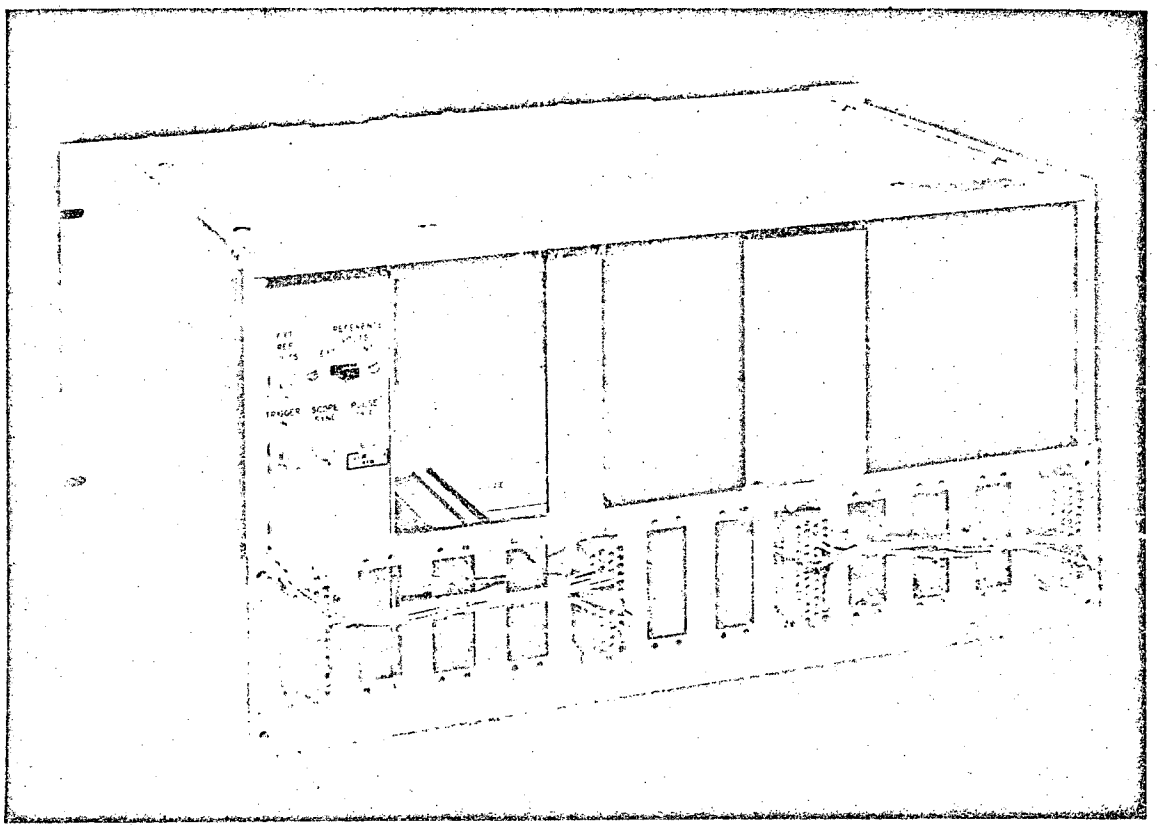

ZN-4569

Fig. 2. Rear view of 8-3/4-in. bin.

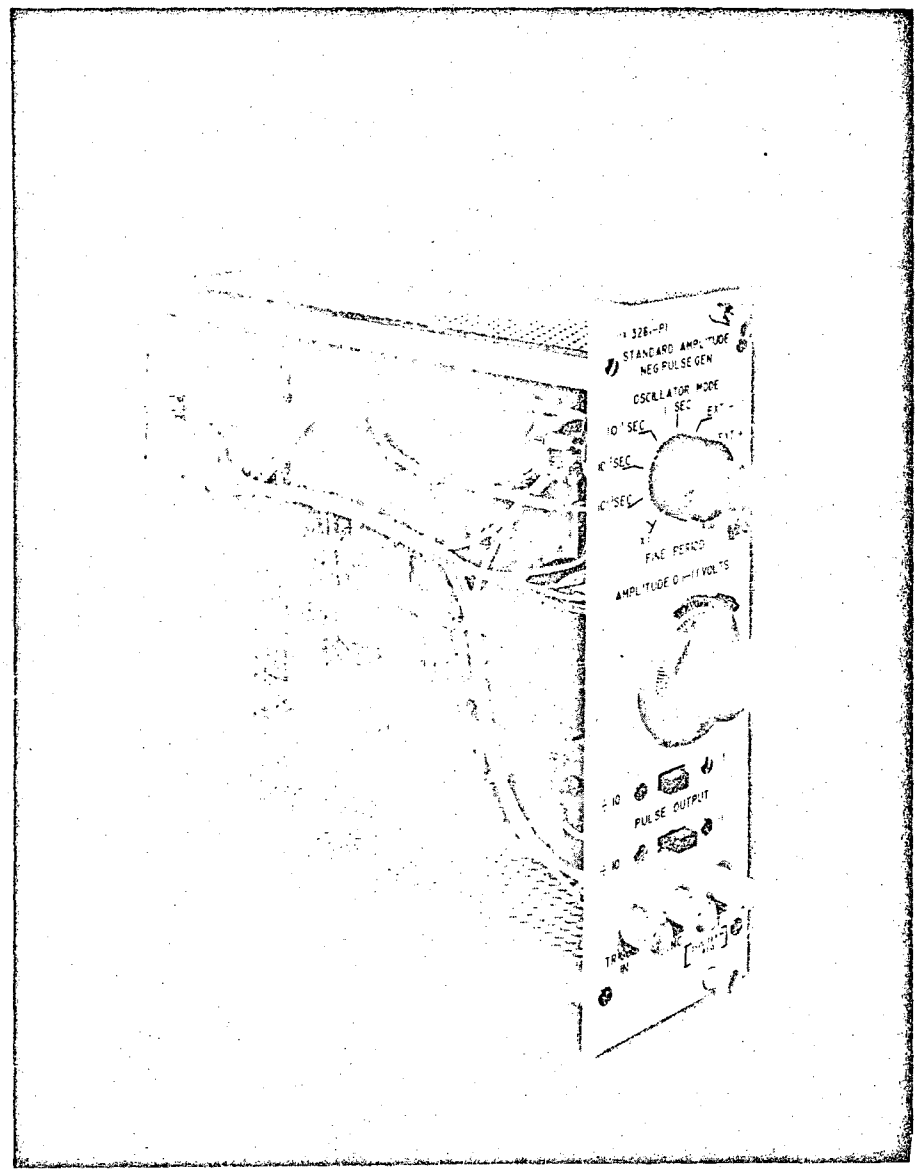

ZN-4571

Fig. 3. 8-3/4-in. Module, Size 2 width.

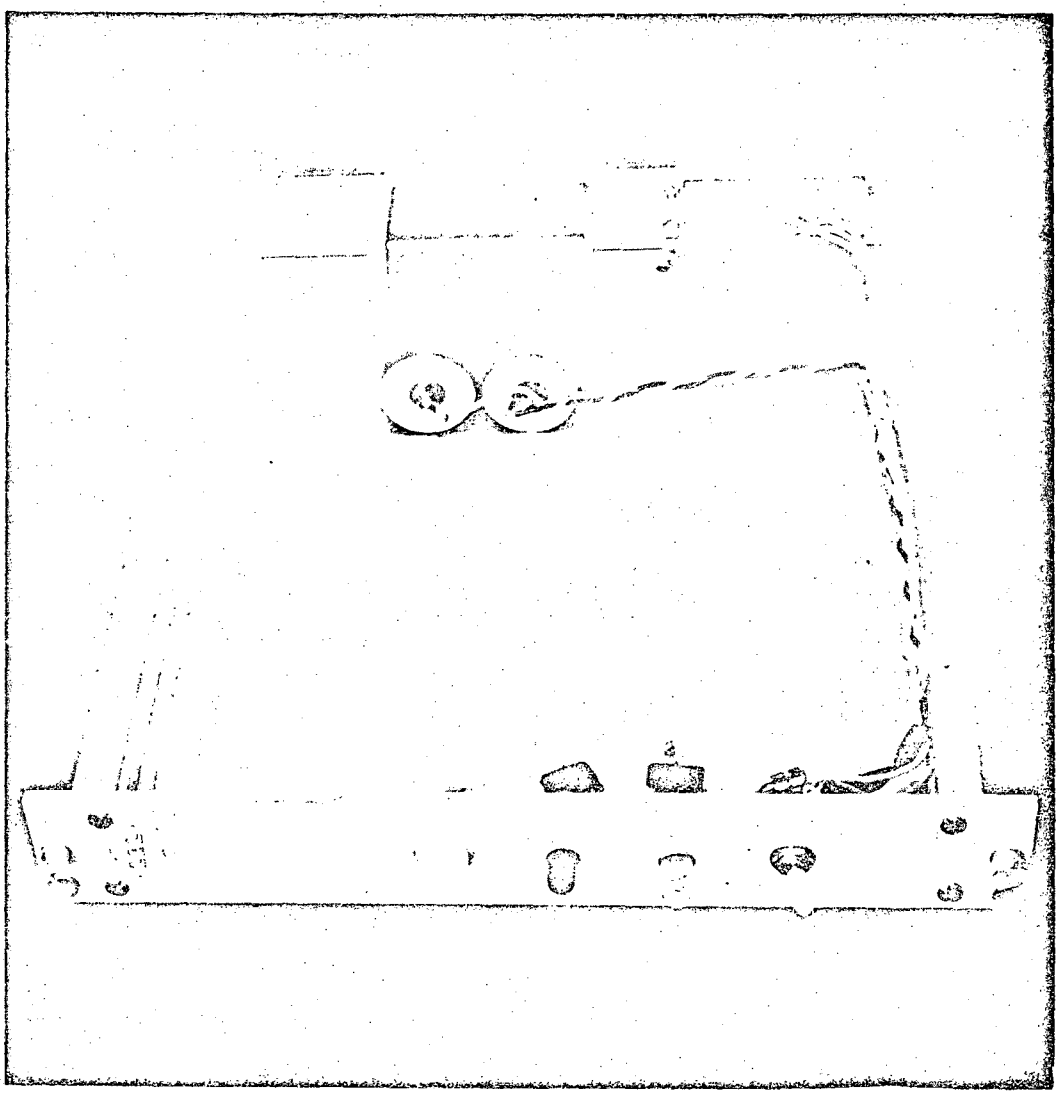

ZN-4558

Fig. 4. Power control module.

Group I of illustrations

Application drawings and schematic diagrams

Page number	Figure number	LRL Drawing number	Title
10	5	11X3041 A-4	Connector layout and hardware
11	6	11X3041 A-3	Connector pin assignments
12	7	11X3044 W-1	Basic bin interconnecting wiring
13	8	11X3044 W-2	Bin interconnecting wiring for power supply remote sensing
14	9	11X3044 M-15	Bin read shielded extender
15	10	11X3044 M-16	Bin power-supply outline
16	11	11X3361 S-1	Power control module
17	12	11X3044 A-5	Shielding detail
18	13	11X3053 A-2	Module shielding detail

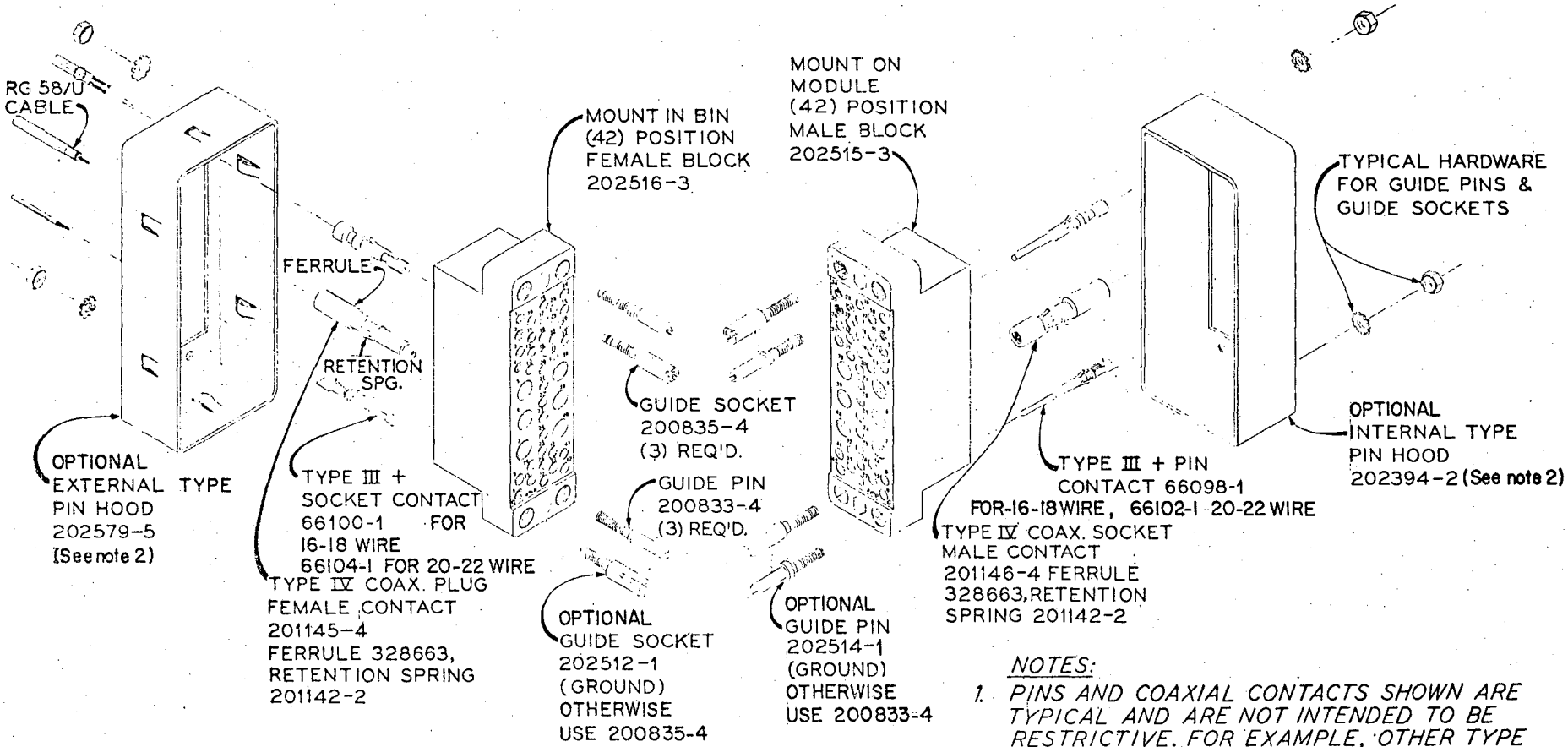

NOTES:

1. *PINS AND COAXIAL CONTACTS SHOWN ARE TYPICAL AND ARE NOT INTENDED TO BE RESTRICTIVE. FOR EXAMPLE, OTHER TYPE IV CONTACTS ACCOMODATE CABLES OTHER THAN THE RG58/U SHOWN.*
2. *MOUNT .031 WASHER (4) BETWEEN MODULE AND CONNECTOR WHEN NOT USING HOOD*

DWG. Nº 11X3041 A-4

Fig. 5

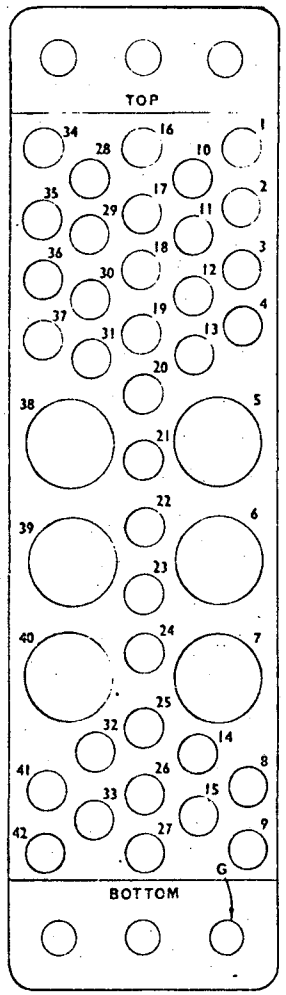

REAR VIEW
BIN CONNECTOR
AMP NO. 202516-3

PIN	FUNCTION
1	+3 VOLTS
2	-3 VOLTS
3	SPARE BUS
4	RESERVED BUS
5	COAXIAL
6	COAXIAL
7	COAXIAL
8	<200 VOLTS D.C.
9	>200 VOLTS D.C.
10	+6 VOLTS
11	-6 VOLTS
12	RESERVED BUS
13	CARRY NO. 1
14	SPARE
15	RESERVED
16	+12 VOLTS
17	-12 VOLTS
18	SPARE BUS
19	RESERVED BUS
20	SPARE
21	SPARE
22	RESERVED
23	RESERVED
24	RESERVED
25	RESERVED
26	0-30 VOLTS A.C.
27	0-30 VOLTS A.C.
28	+24 VOLTS
29	-24 VOLTS
30	SPARE BUS
31	CARRY NO. 2
32	SPARE
33	115 VOLTS A.C.
34	CLEAN GROUND
35	RESET
36	GATE
37	SPARE
38	COAXIAL
39	COAXIAL
40	COAXIAL
41	115 VOLTS A.C.
42	DIRTY GROUND
G	GROUND GUIDE PIN

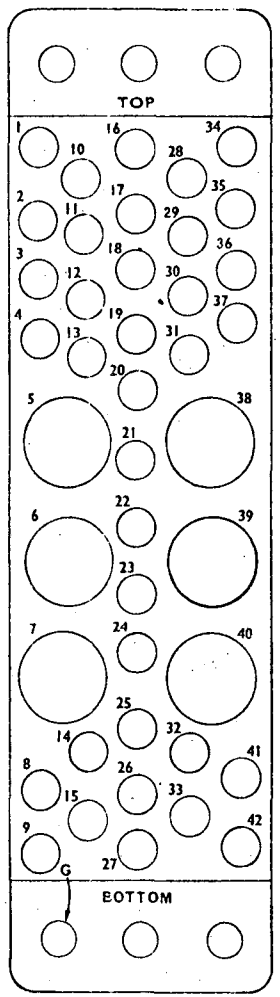

REAR VIEW
MODULE CONNECTOR
AMP NO. 202515-3

NOTES:

1. A WIDE VARIETY OF PINS IS AVAILABLE. TO ASSURE INTERCHANGEABILITY THE FOLLOWING REQUIREMENTS APPLY.
   (a) PIN TYPES: SINGLE PINS & SOCKETS SHALL BE TYPE III* AT LRL
   (b) COAXIAL CONTACTS: SHALL BE TYPE IV.
   (c) LENGTH OF SINGLE PINS: "LONG".
   (d) SIZE OF SINGLE PINS: NO. 16, (.032") DIAMETER.
   (e) SINGLE PIN & SOCKET CURRENT RATING: 13 AMPERES.
   (f) IMPEDANCE OF COAXIAL CONTACTS: 50 OHMS.
   (g) FINISH: 0.00003 INCH GOLD OVER NICKEL.
2. GUIDE PINS SHALL BE AS SHOWN EXCEPT GROUND GUIDE PIN & SOCKET IS AN OPTIONAL ALTERNATE.
3. PIN HOODS ARE OPTIONAL. 0.031 INCH THICK SPACERS ARE REQUIRED WHEN HOODS ARE NOT USED.

DWG. Nº 11X3041 A-3

Fig. 6

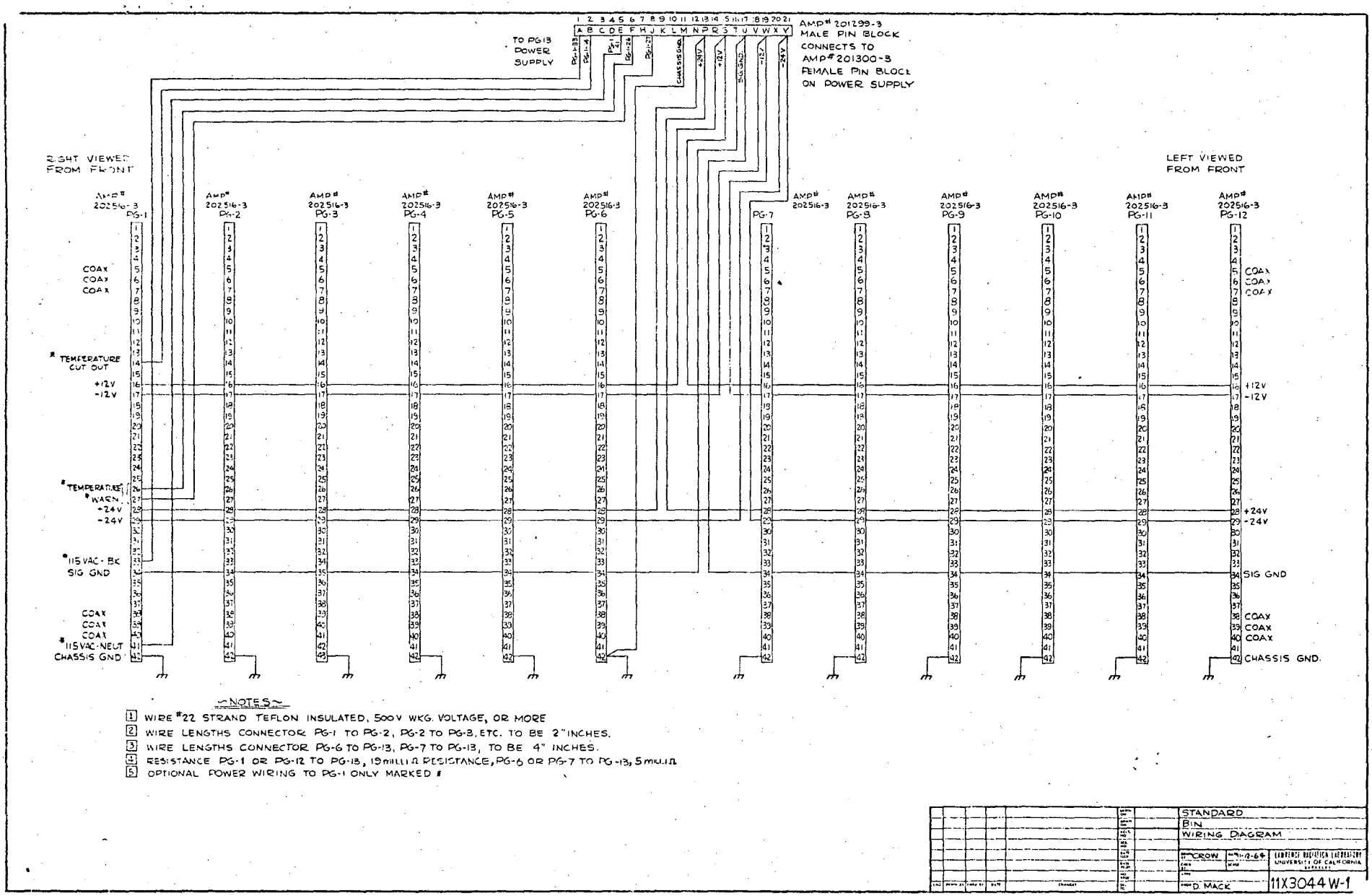

NOTES

1. WIRE #22 STRAND TEFLON INSULATED, 500V WKG. VOLTAGE, OR MORE
2. WIRE LENGTHS CONNECTOR PG-1 TO PG-2, PG-2 TO PG-3, ETC. TO BE 2" INCHES.
3. WIRE LENGTHS CONNECTOR PG-6 TO PG-13, PG-7 TO PG-13, TO BE 4" INCHES.
4. RESISTANCE PG-1 OR PG-12 TO PG-13, 19 milli Ω RESISTANCE, PG-6 OR PG-7 TO PG-13, 5 milli Ω
5. OPTIONAL POWER WIRING TO PG-1 ONLY MARKED #

STANDARD BIN WIRING DIAGRAM

CROW 11-2-64

LAWRENCE RADIATION LABORATORY UNIVERSITY OF CALIFORNIA BERKELEY

D. MACK

11X3044 W-1

Fig. 7

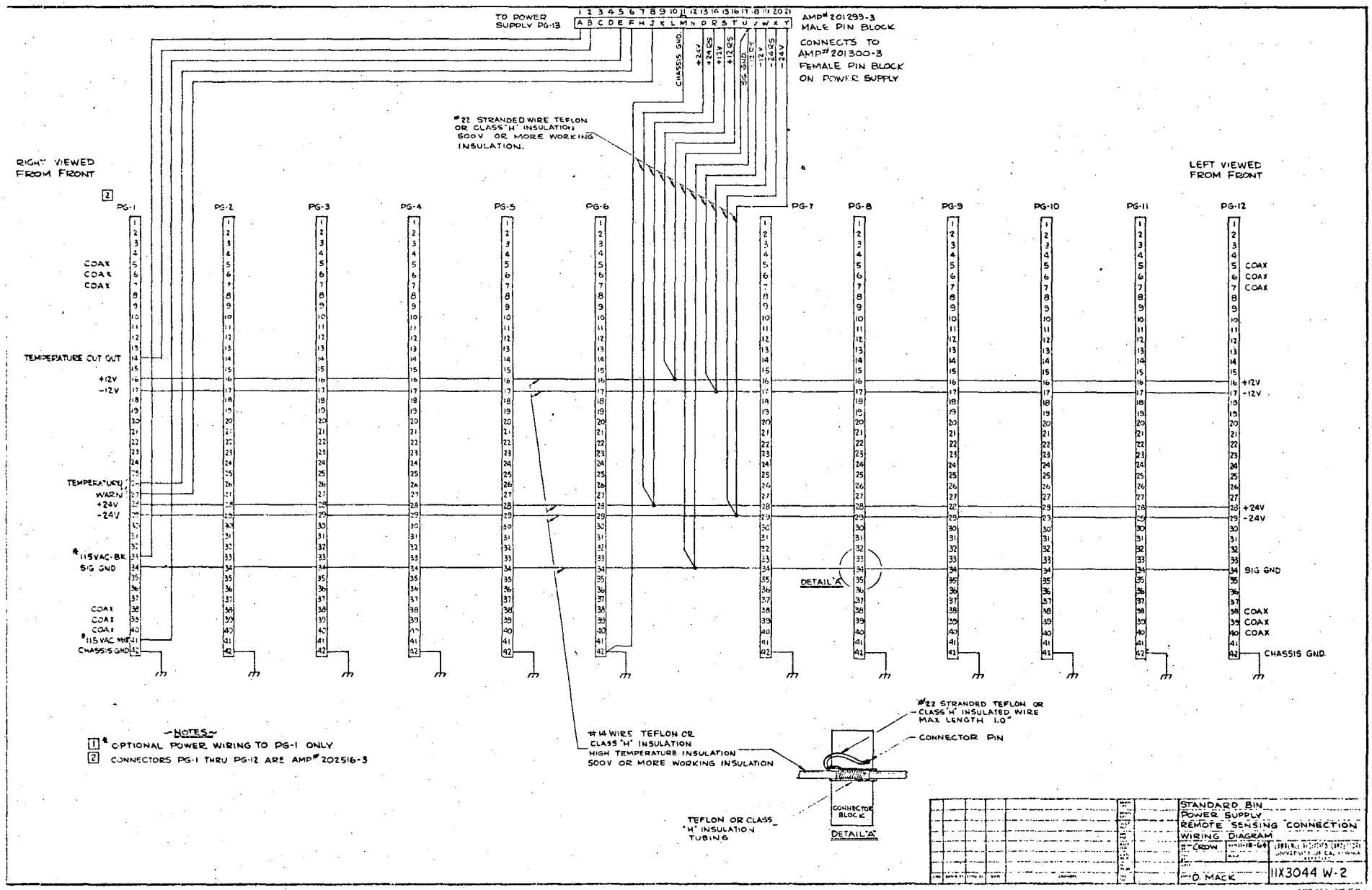
TO POWER SUPPLY PG-13
AMP# 201299-3 MALE PIN BLOCK
CONNECTS TO AMP# 201300-3 FEMALE PIN BLOCK ON POWER SUPPLY
CHASSIS GND.
+24V
+24 RS
+12V
+12 RS
SIG GND
-12V
-24 RS
-24V
#22 STRANDED WIRE TEFLON OR CLASS 'H' INSULATION 500V OR MORE WORKING INSULATION.
RIGHT VIEWED FROM FRONT
LEFT VIEWED FROM FRONT
PG-1
PG-2
PG-3
PG-4
PG-5
PG-6
PG-7
PG-8
PG-9
PG-10
PG-11
PG-12
COAX
COAX
COAX
TEMPERATURE CUT OUT
+12V
-12V
TEMPERATURE WARN
+24V
-24V
115VAC-BK
SIG GND
COAX
COAX
COAX
115 VAC RED
CHASSIS GND
DETAIL 'A'
SIG GND
CHASSIS GND.
#14 WIRE TEFLON OR CLASS 'H' INSULATION HIGH TEMPERATURE INSULATION 500V OR MORE WORKING INSULATION
#22 STRANDED TEFLON OR CLASS 'H' INSULATED WIRE MAX LENGTH 1.0"
CONNECTOR PIN
CONNECTOR BLOCK
TEFLON OR CLASS 'H' INSULATION TUBING
DETAIL 'A'
NOTES
1 OPTIONAL POWER WIRING TO PG-1 ONLY
2 CONNECTORS PG-1 THRU PG-12 ARE AMP# 202516-3
STANDARD BIN POWER SUPPLY REMOTE SENSING CONNECTION WIRING DIAGRAM
D. MACK
11X3044 W-2

Fig. 8

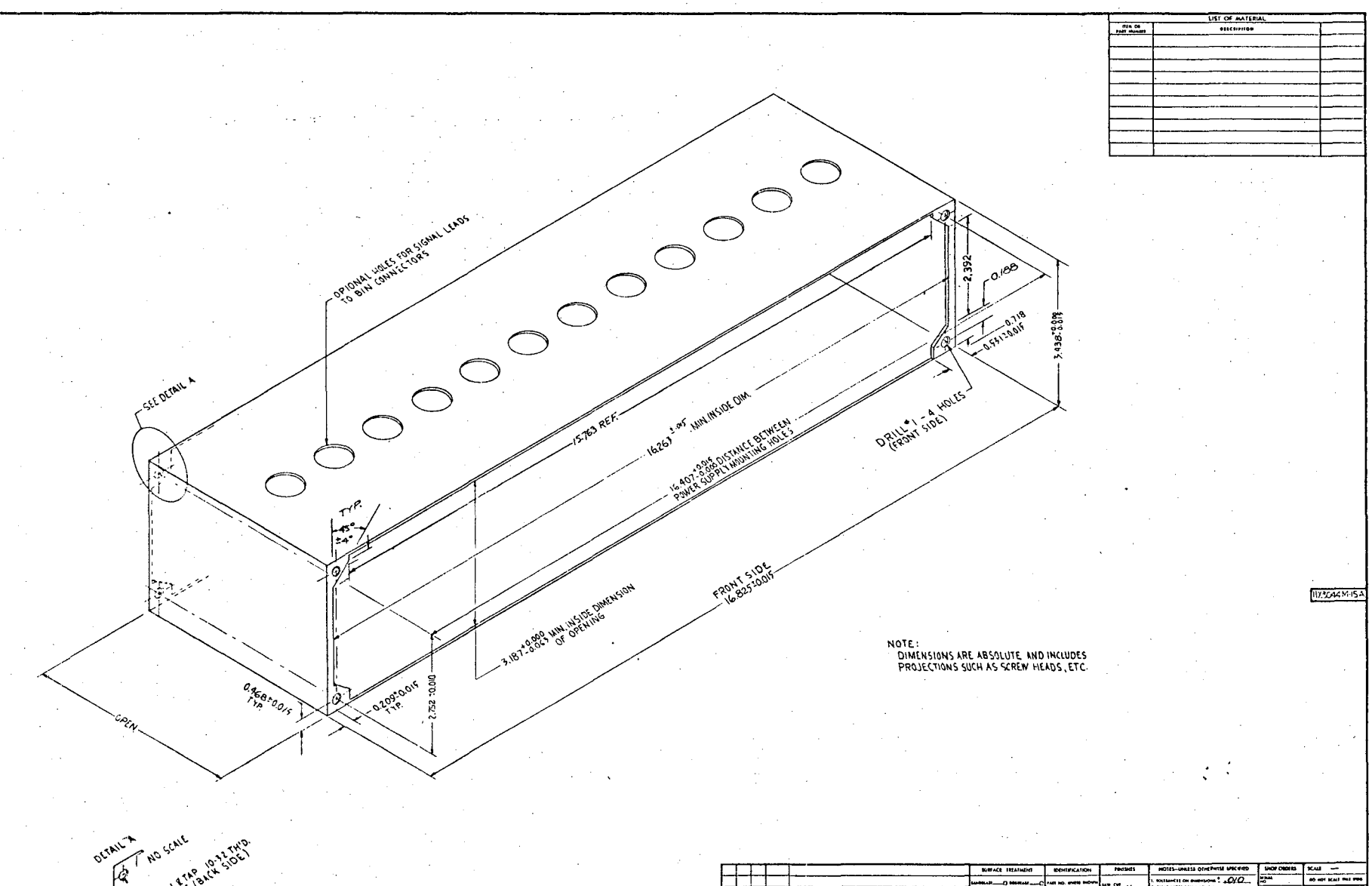
LIST OF MATERIAL
OPTIONAL HOLES FOR SIGNAL LEADS TO BIN CONNECTORS
SEE DETAIL A
15.763 REF.
16.263 ±.015 MIN. INSIDE DIM.
16.407 +0.015 -0.000 DISTANCE BETWEEN POWER SUPPLY MOUNTING HOLES
DRILL #1 - 4 HOLES (FRONT SIDE)
2.392
0.188
0.718
0.531±0.015
3.438 +0.000 -0.015
TYP.
45° ±4°
FRONT SIDE 16.825±0.015
3.187 +0.000 -0.063 MIN. INSIDE DIMENSION OF OPENING
0.468±0.015 TYP.
0.209±0.015 TYP.
2.752±0.010
OPEN
NOTE:
DIMENSIONS ARE ABSOLUTE AND INCLUDES PROJECTIONS SUCH AS SCREW HEADS, ETC.
11X3044M-15A
DETAIL A
NO SCALE
DRILL & TAP 10-32 TH'D. 4 HOLES (BACK SIDE)
SURFACE TREATMENT
IDENTIFICATION
FINISHES
NOTES—UNLESS OTHERWISE SPECIFIED
SHOP ORDERS
SCALE
LAWRENCE RADIATION LABORATORY
11X3044M1B
STANDARD NUCLEAR INSTRUMENTATION
BIN
EXTENDER

Fig. 9

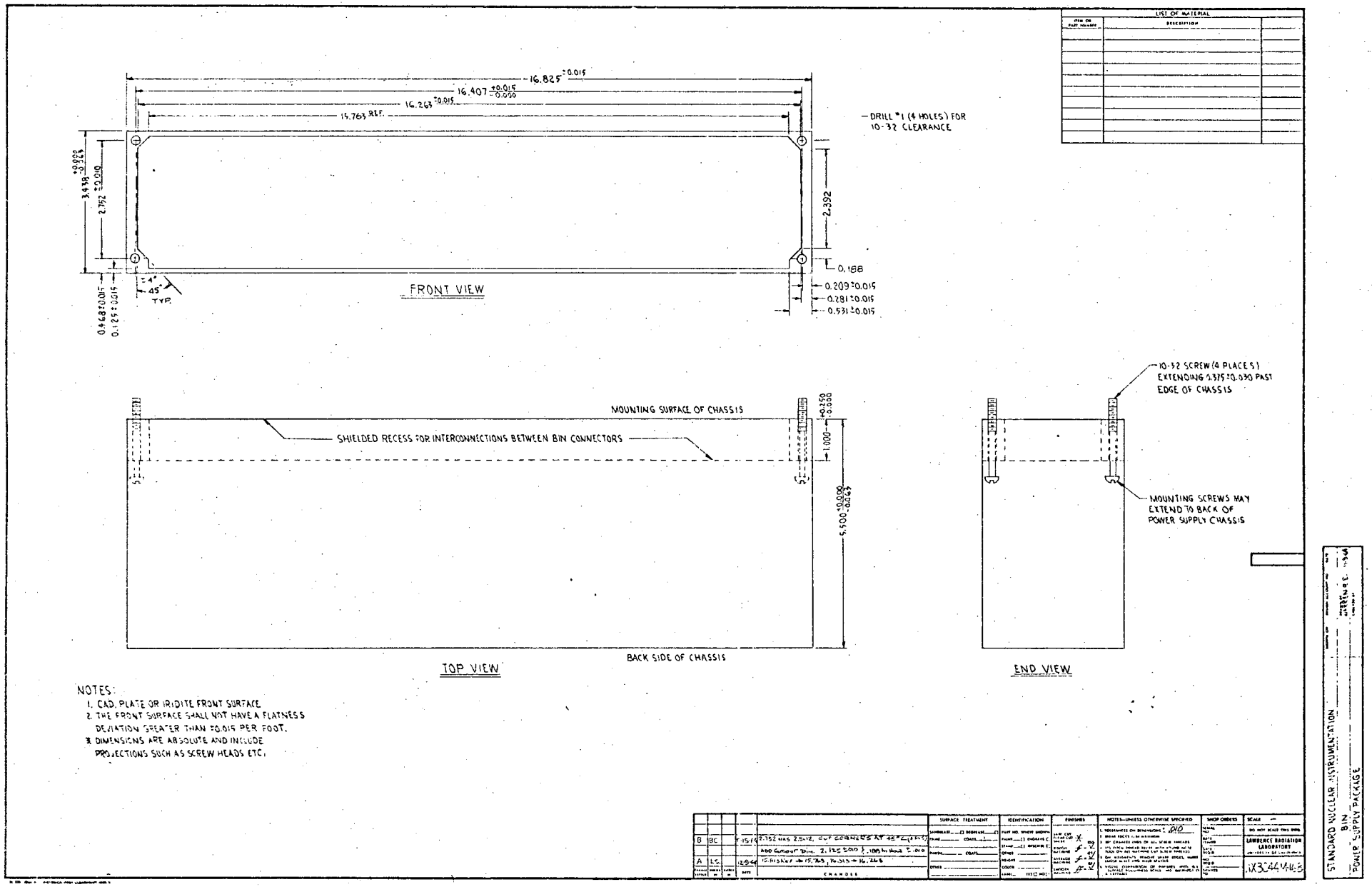
LIST OF MATERIAL
16.825 ±0.015
16.407 +0.015 -0.000
16.263 ±0.015
15.763 REF.
DRILL #1 (4 HOLES) FOR 10-32 CLEARANCE
3.438 +0.000 -0.063
2.752 ±0.010
2.392
0.188
0.209 ±0.015
0.281 ±0.015
0.531 ±0.015
0.468 ±0.015
0.125 ±0.015
±4°
45°
TYP.
FRONT VIEW
MOUNTING SURFACE OF CHASSIS
SHIELDED RECESS FOR INTERCONNECTIONS BETWEEN BIN CONNECTORS
1.000 +0.250 -0.000
5.500 +0.000 -0.063
BACK SIDE OF CHASSIS
TOP VIEW
10-32 SCREW (4 PLACES) EXTENDING 0.375 ±0.030 PAST EDGE OF CHASSIS
MOUNTING SCREWS MAY EXTEND TO BACK OF POWER SUPPLY CHASSIS
END VIEW
NOTES:
1. CAD. PLATE OR IRIDITE FRONT SURFACE
2. THE FRONT SURFACE SHALL NOT HAVE A FLATNESS DEVIATION GREATER THAN ±0.015 PER FOOT.
3. DIMENSIONS ARE ABSOLUTE AND INCLUDE PROJECTIONS SUCH AS SCREW HEADS ETC.
STANDARD NUCLEAR INSTRUMENTATION
BIN
POWER SUPPLY PACKAGE
LAWRENCE RADIATION LABORATORY
1X3044M-63

Fig. 10

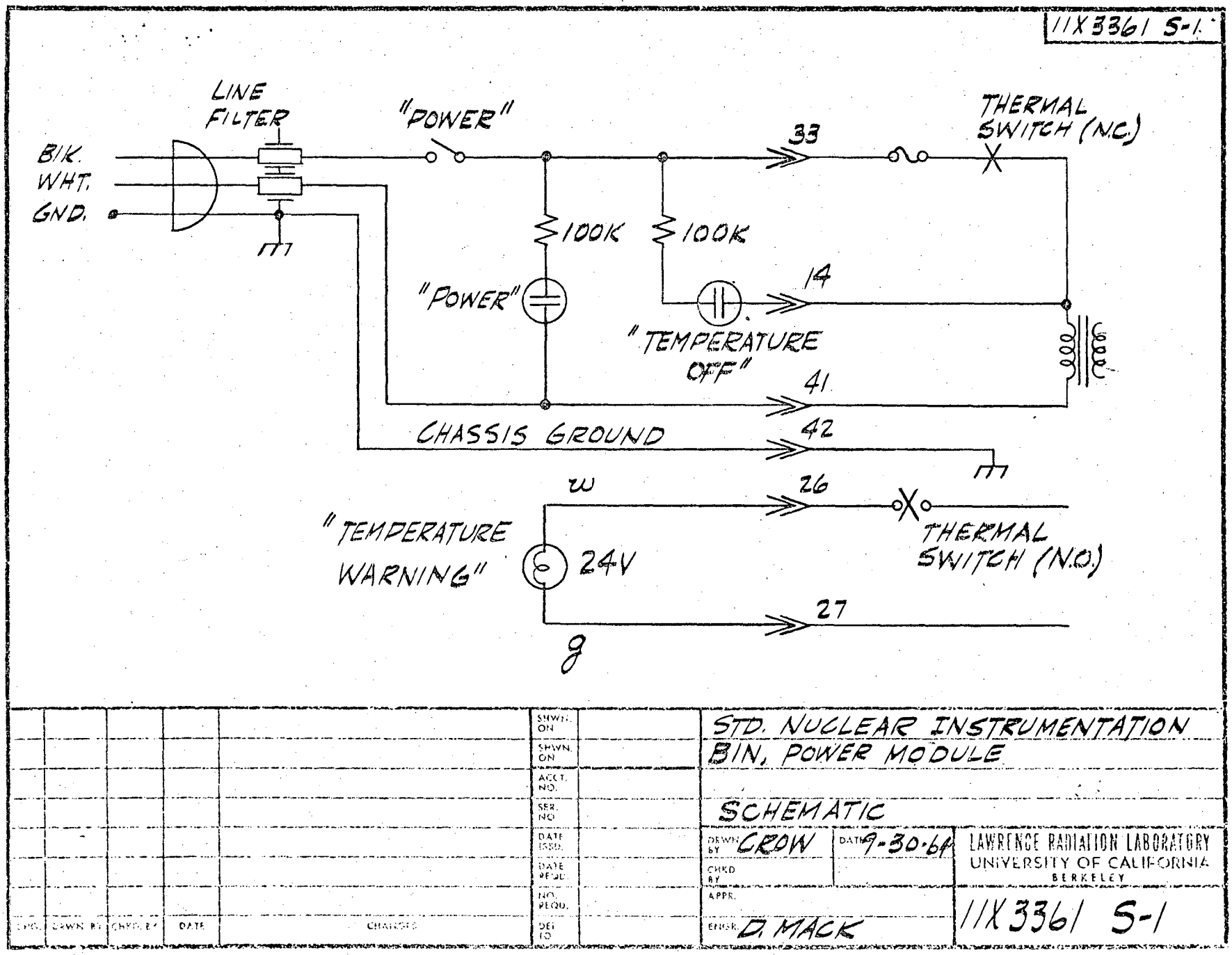
11X3361 S-1
LINE FILTER
"POWER"
THERMAL SWITCH (N.C.)
BLK.
WHT.
GND.
33
100K
100K
14
"POWER"
"TEMPERATURE OFF"
41
CHASSIS GROUND
42
w
26
"TEMPERATURE WARNING"
24V
THERMAL SWITCH (N.O.)
27
g
STD. NUCLEAR INSTRUMENTATION
BIN, POWER MODULE
SCHEMATIC
DRWN BY CROW
DATE 9-30-64
LAWRENCE RADIATION LABORATORY
UNIVERSITY OF CALIFORNIA
BERKELEY
ENGR. D. MACK
11X3361 S-1

Fig. 11

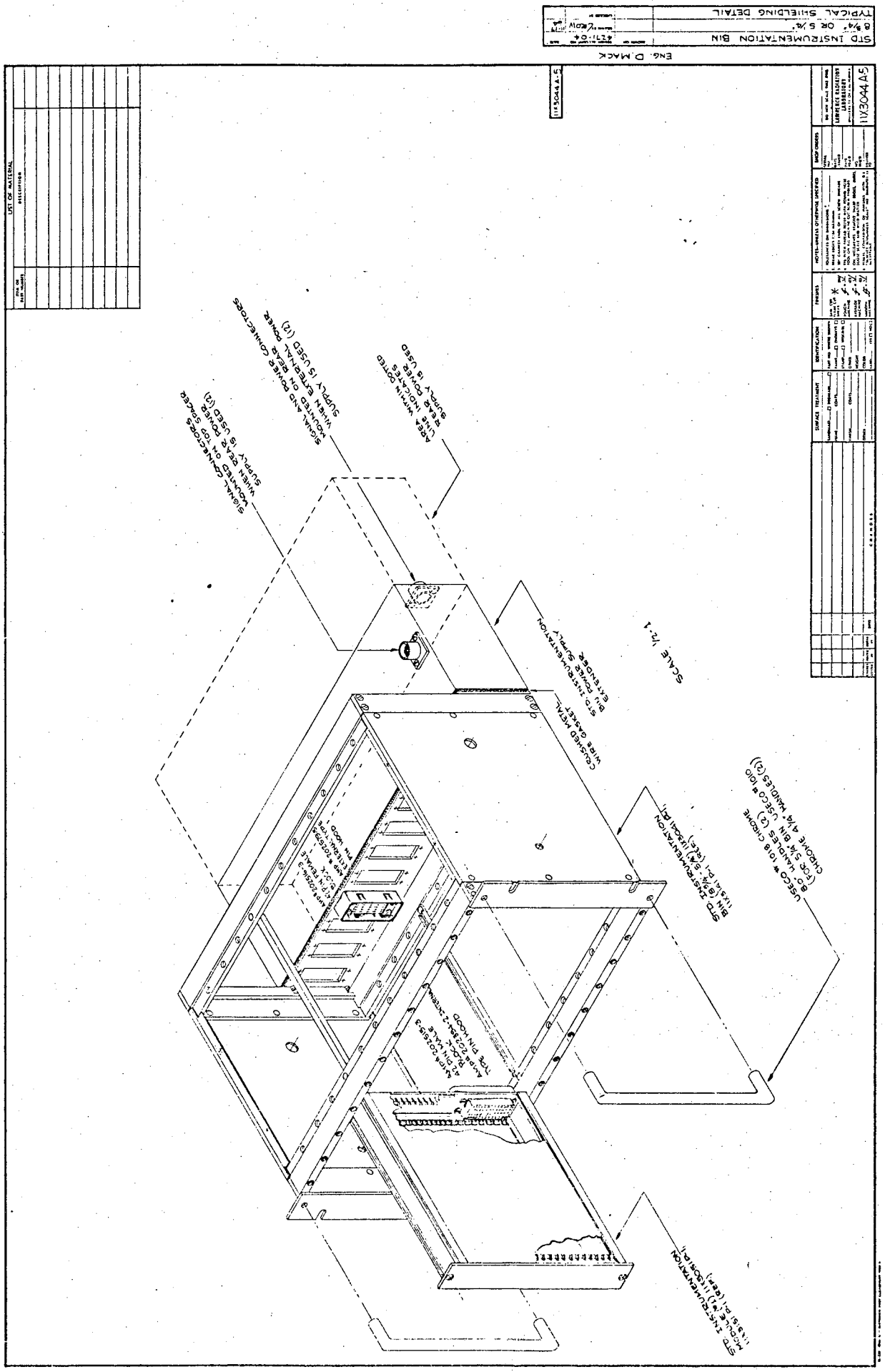
STD INSTRUMENTATION BIN
8 3/4" OR 5 1/4"
TYPICAL SHIELDING DETAIL
ENG. D. MACK
11X3044 A-5
LIST OF MATERIAL
SIGNAL CONNECTORS MOUNTED ON TOP SPACER WHEN REAR POWER SUPPLY IS USED (12)
SIGNAL AND POWER CONNECTORS MOUNTED ON REAR WHEN EXTERNAL POWER SUPPLY IS USED (12)
AREA WITHIN DOTTED LINE INDICATES REAR POWER SUPPLY IS USED
STD. INSTRUMENTATION BIN POWER SUPPLY EXTENDER
CRUSHED METAL WIRE GASKET
SCALE 1/2:1
STD. INSTRUMENTATION BIN (8 3/4", 5 1/4") 11X3041 P.I.
USECO # 1018 CHROME 80° HANDLES (2) (FOR 5 1/4" BIN USECO # 1010 CHROME 4 1/4" HANDLES (2))
STD. INSTRUMENTATION MODULE (#1) 11X3051 P.I.

Fig. 12

~NOTES~

1. STD. NUCLEAR INSTRUMENTATION MODULE EXTRUDED CORNER, REF. 11X3052 M-1
2. CF-100 FINGER STOCK, BERYLLIUM COPPER (EIMAC)
3. MODULE REAR PANEL (#2 SHOWN) FOR OTHER WIDTH MODULES SEE PRINT LIST 11X3051 P-1 - (11X3151 P-1 - 5¼" MODULE)
4. 5/16"X1/8"X.030" ANGLE 6.871" LONG (4 PER MODULE) ELECTROLESS NICKLE PLATE THE 5/16" LEG OF THE ANGLE AND LEAVE THE 1/8" LEG ALUMINUM, AFTER PLATING SPOT WELD ALUMINUM LEG OF ANGLE TO REAR PANEL OF MODULE IN THREE PLACES AND THEN SOFT SOLDER CF-100 FINGER STOCK TO NICKLE PLATED LEG OF ANGLE TO PROVIDE R.F. SHIELD FOR MODULE. (TYP. ALL 4 CORNERS)
5. ON 5¼" MODULE, ABOVE ANGLE IS 5/16"X1/8"X.030" - 3.371" LONG.

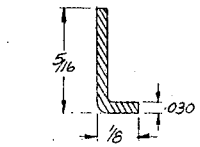

CROSS SECTION OF 5/16" X 1/8" X .030 ANGLE

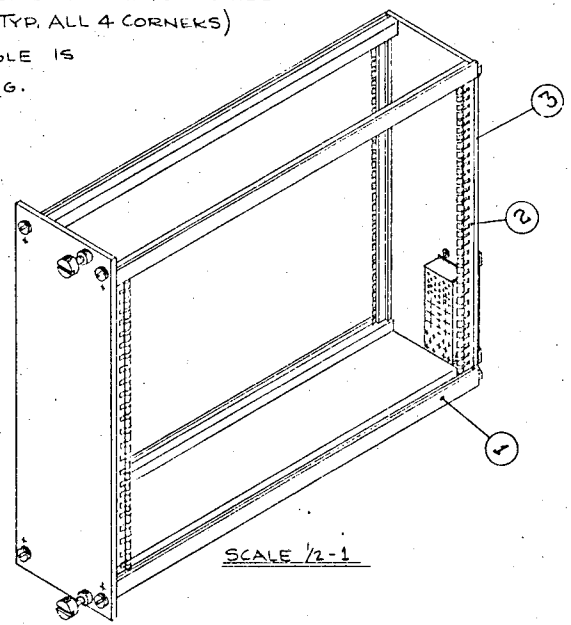

SCALE 1/2-1

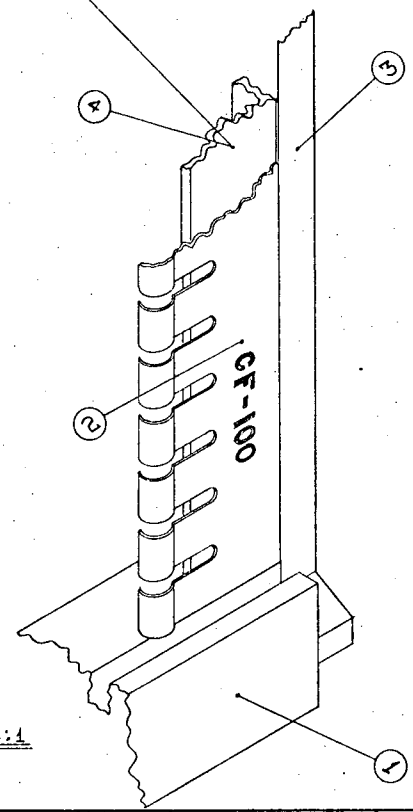

SCALE 4:1

11X3053 A-2

LIST OF MATERIAL		
ITEM OR PART NUMBER	DESCRIPTION	

CHANGE LETTER	DRAWN BY	CHECK BY	DATE	CHANGES	

SURFACE TREATMENT: SANDBLAST ☐ DEGREASE ☐; PRIME ____ COATS ____; FINISH ____ COATS ____; OTHER ____

IDENTIFICATION: PART NO. WHERE SHOWN; PAINT ☐ ENGRAVE ☐; STAMP ☐ INSCRIBE ☐; OTHER ____; HEIGHT ____; COLOR ____; LABEL ____ YES ☐ NO ☐

FINISHES: SAW CUT FLAME CUT SHEAR 250; ROUGH MACHINE 125; AVERAGE MACHINE 63; SMOOTH MACHINE 32

NOTES—UNLESS OTHERWISE SPECIFIED
1. TOLERANCES ON DIMENSIONS ±
2. BREAK EDGES 1/64 MAXIMUM
3. 30° CHAMFER ENDS OF ALL SCREW THREADS
4. 15% PITCH THREAD RELIEF WITH ROUND NOSE TOOL ON ALL MACHINE CUT SCREW THREADS
5. ON WELDMENTS, REMOVE SHARP EDGES, BURRS, LOOSE SCALE AND WELD SPATTER
6. VISUAL COMPARISON OF FINISHES WITH O.S. "SURFACE ROUGHNESS SCALE" NO. 8669A/GT IS ACCEPTABLE.

SHOP ORDERS: SERIAL NO. ____; DATE ISSUED ____; DATE REQ'D ____; NO. REQ'D ____; DELIVER TO ____

DO NOT SCALE THIS DWG

LAWRENCE RADIATION LABORATORY
UNIVERSITY OF CALIFORNIA

11X3053A-2

STD. NUCLEAR INSTRUMENTATION MODULE R.F. SHIELD MOUNTING DETAIL

SHOWN ON: 4271-04 DATE
DRAWN BY: C. ROW 3/2/64
CHECKED BY

Fig. 13

Group II of illustrations

Construction drawings for 5-1/4-inch instrumentation module

Page number	Figure number	LRL Drawing number	Title	Number required		
				Size 1	Size 2	Size 3
20	14	11X3153 A-1	Overall assembly	-	-	-
21	15	11X3321 M-5A	Aluminum extrusion sectional	-	-	-
22	16	11X3052 M-1	Extruded corner	4	4	4
23	17	11X3154 M-13	Side covers (right and left)	2	2	2
24	18	11X3053 M-4	Screen covers (top and bottom)#1	2		
25	19	11X3053 M-8	Screen covers (top and bottom)#2		2	
26	20	11X3053 M-11	Screen covers (top and bottom)#3			2
27	21	11X3053 M-13	Side cover fastener bracket	1	1	1
28	22	11X3152 M-1	Front panel#1	1		
29	23	11X3152 M-2	Rear panel#1	1		
30	24	11X3153 M-3	Front panel#2		1	
31	25	11X3153 M-4	Rear panel#2		1	
32	26	11X3153 M-5	Front panel#3			1
33	27	11X3153 M-6	Rear panel#3			1

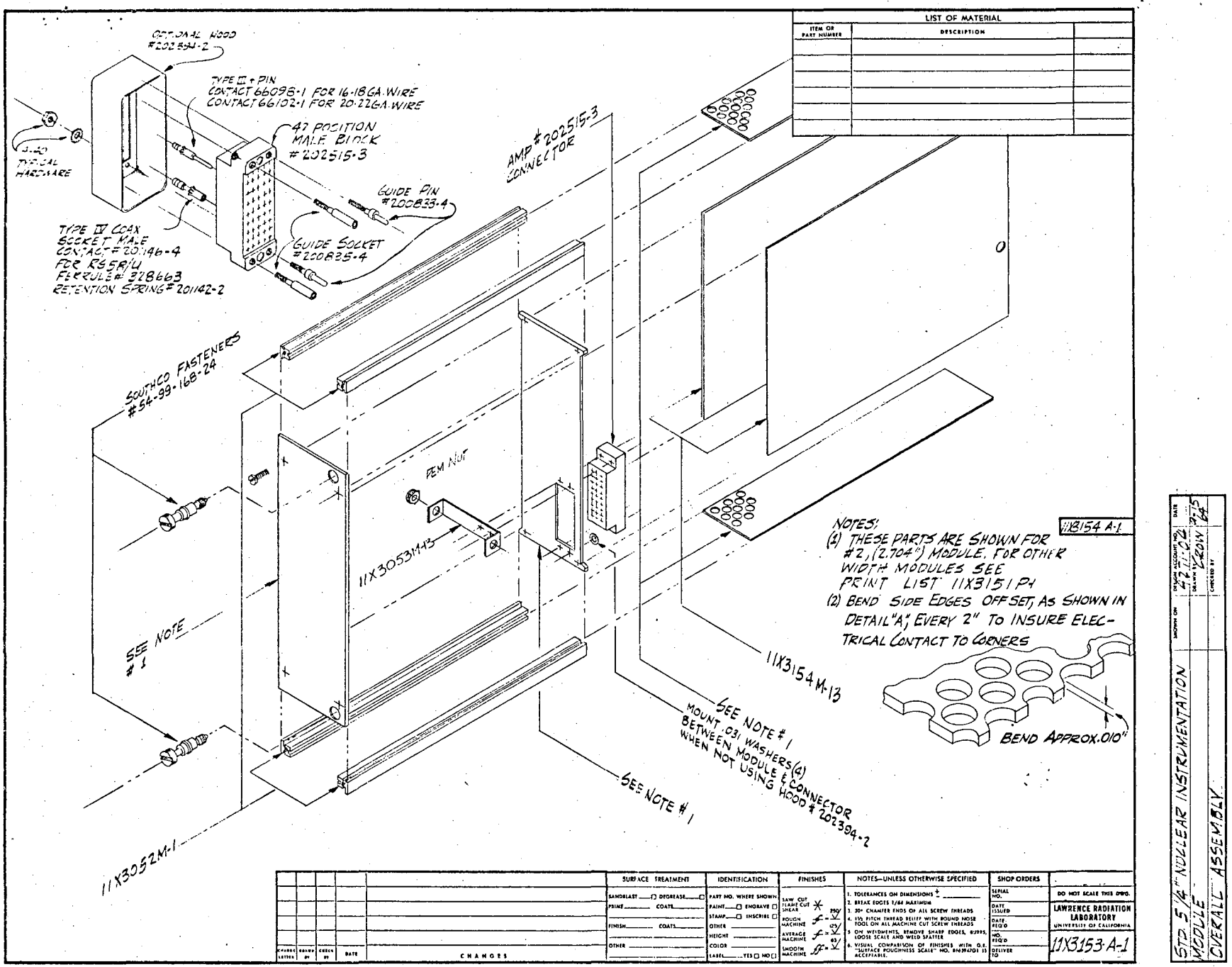
LIST OF MATERIAL
ITEM OR PART NUMBER
DESCRIPTION
OPTIONAL HOOD #202394-2
TYPE III + PIN CONTACT 66098-1 FOR 16-18GA. WIRE CONTACT 66102-1 FOR 20-22GA. WIRE
47 POSITION MALE BLOCK #202515-3
TYPICAL HARDWARE
GUIDE PIN #200833-4
GUIDE SOCKET #200835-4
TYPE IV COAX SOCKET MALE CONTACT #201146-4 FOR RG58/U FERRULE # 328663 RETENTION SPRING # 201142-2
AMP # 202515-3 CONNECTOR
SOUTHCO FASTENERS #54-99-168-24
FEM NUT
11X3053M-3
SEE NOTE #1
11X3052M-1
11X3154 M-13
SEE NOTE #1
MOUNT .031 WASHERS(2) BETWEEN MODULE & CONNECTOR WHEN NOT USING HOOD # 202394-2
SEE NOTE #1
11X3154 A-1
NOTES:
(1) THESE PARTS ARE SHOWN FOR #2, (2.704") MODULE. FOR OTHER WIDTH MODULES SEE PRINT LIST 11X3151 PH
(2) BEND SIDE EDGES OFFSET, AS SHOWN IN DETAIL "A", EVERY 2" TO INSURE ELECTRICAL CONTACT TO CORNERS
BEND APPROX. .010"
SURFACE TREATMENT
IDENTIFICATION
FINISHES
NOTES—UNLESS OTHERWISE SPECIFIED
SHOP ORDERS
DO NOT SCALE THIS DWG.
LAWRENCE RADIATION LABORATORY
UNIVERSITY OF CALIFORNIA
11X3153-A-1
STD 5 1/2" NUCLEAR INSTRUMENTATION MODULE
OVERALL ASSEMBLY
CHANGES

Fig. 14

Change Letter	Drawn By	Check By	Date	CHANGES	MATERIAL ALUMINUM 6063-T5	11X3321M-5A

NOTES:
1) FLATNESS - .004/IN.
2) STRAIGHTNESS - .0125/FT.
3) TWIST - 1/2°/FT.
4) ANGULARITY ± 1°
5) CORNER & FILLET RADII .015 IN
6) SURFACE ROUGHNESS .0021 IN. MAX

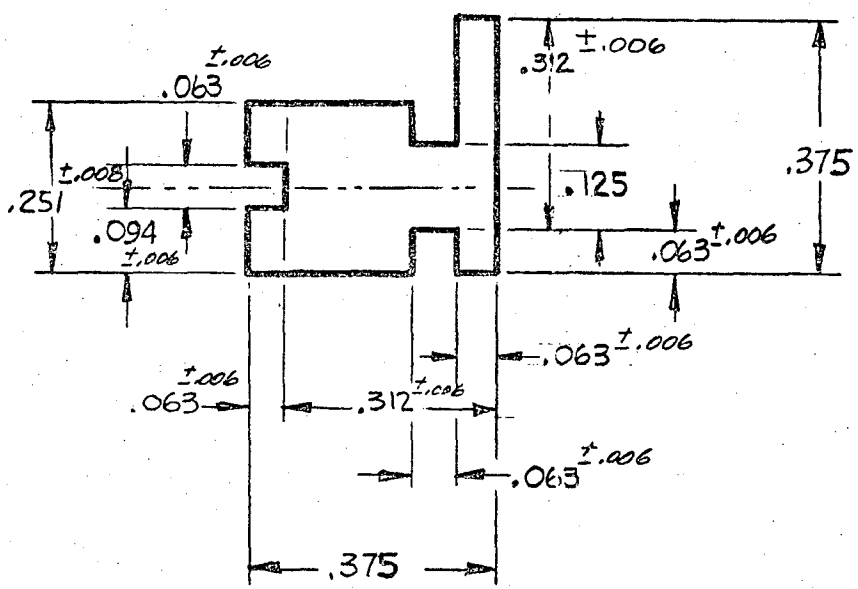

SURFACE TREATMENT	IDENTIFICATION	FINISHES	NOTES—UNLESS OTHERWISE SPECIFIED	SHOP ORDERS	
SANDBLAST ☐ DEGREASE ☐	PART NO. WHERE SHOWN	SAW CUT FLAME CUT SHEAR	1. TOLERANCES ON DIMENSIONS ±.006	SERIAL NO.	DO NOT SCALE THIS DWG.
PRIME ____ COATS ____	PAINT ☐ ENGRAVE ☐	ROUGH MACHINE 250	2. BREAK EDGES 1/64 MAXIMUM	DATE ISSUED	RADIATION LABORATORY UNIVERSITY OF CALIFORNIA
	STAMP ☐ INSCRIBE ☐	AVERAGE MACHINE 125	3. 30° CHAMFER ENDS OF ALL SCREW THREADS	DATE REQ'D	
FINISH ____ COATS ____	OTHER ____	SMOOTH MACHINE 63	4. 1½ PITCH THREAD RELIEF WITH ROUND NOSE TOOL ON ALL MACHINE CUT SCREW THREADS	NO. REQ'D	11X3321M-5A
	HEIGHT ____		5. ON WELDMENTS, REMOVE SHARP EDGES, BURRS, LOOSE SCALE AND WELD SPATTER	DELIVER TO	
OTHER ____	COLOR ____		6. VISUAL COMPARISON OF FINISHES WITH G.E. "SURFACE ROUGHNESS SCALE" NO. 8665947G1 IS ACCEPTABLE.		
	LABEL ____ YES ☐ NO ☐				

RL-330 (Size 1)

SHOWN ON	DESIGN ACCOUNT NO. 4271-04	DATE
	DRAWN BY CROW	8-11 64
	CHECKED BY	

ALUMINUM EXTRUSION SECTIONAL,
USED FOR MODULE BRACES IN STD. 8¾" & 5¼" NUCLEAR INSTRUMENTATION BIN'S

Fig. 15

PART #	DESCRIPTION
11X3321M5	ALUMINUM EXTRUSION, 6061 T-6

HOLE SCHEDULE	
DESIG.	DESCRIPTION
A	#43 DRILL, .500 MIN THREAD DEPTH (4-40)
B	#52 DRILL, .125 DEEP BOTH ENDS

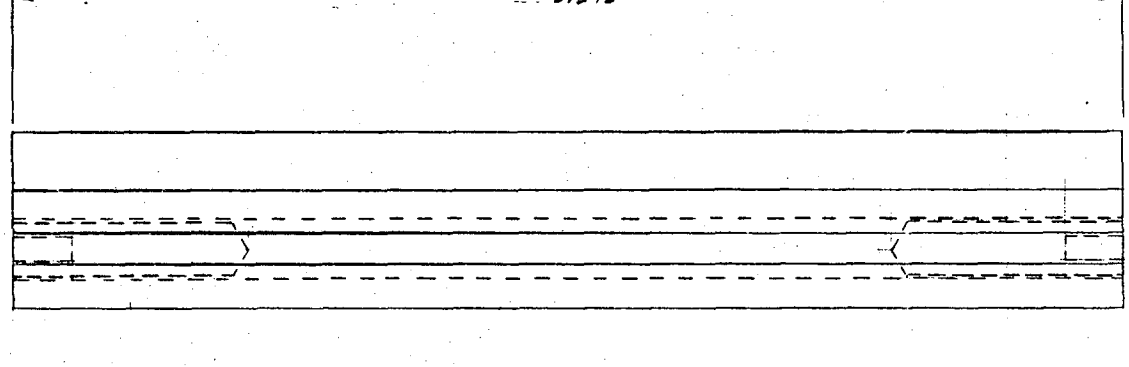

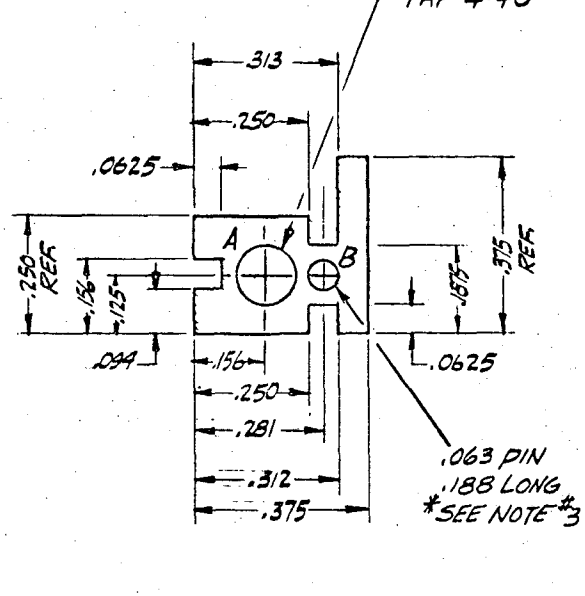

NOTE:
1. ALL DIMENSIONS ARE ±.006 UNLESS OTHERWISE STATED.
2. FINISH IRIDITE #14
3. INSTALL PIN IN .063 HOLE THAT MATES WITH FRONT PANEL

CHG.	DRWN. BY	CHKD. BY	DATE	CHANGES

SHWN. ON		STD. NUCLEAR INSTRUMENTATION	
SHWN. ON		MODULE EXTRUDED CORNER	
ACCT. NO.			
SPR. NO.			
DATE ISSD.		DRWN. BY CROW	DATE 7-24-64
DATE REQD.		CHKD. BY	
NO. REQD.		APPR.	
DEL. TO		ENGR. D. MACK	

LAWRENCE RADIATION LABORATORY
UNIVERSITY OF CALIFORNIA
BERKELEY

11X3052 M-1

RL-20C9-1 (Rev. 3-63)

DIETERICH-POST CLEARPRINT 1000 H

Fig. 16

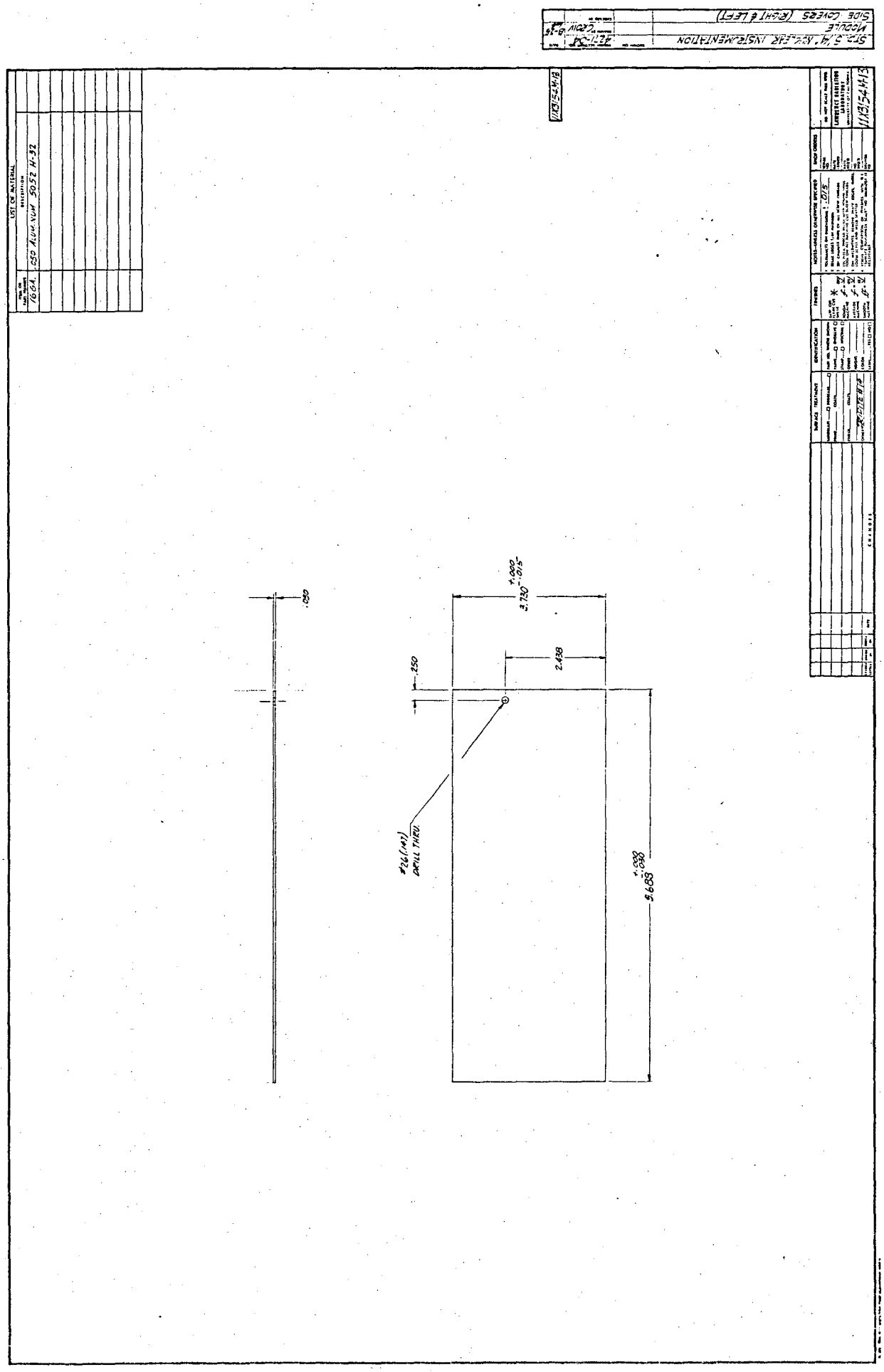
STD. 5 1/4" NUCLEAR INSTRUMENTATION
MODULE
SIDE COVERS (RIGHT & LEFT)
LIST OF MATERIAL
16 GA. .050 ALUM. NUM 5052 H-32
.050
.250
2.438
3.730 +.000 -.015
#26 (.147) DRILL THRU.
5.683 +.000 -.030
11X3154H-13

Fig. 17

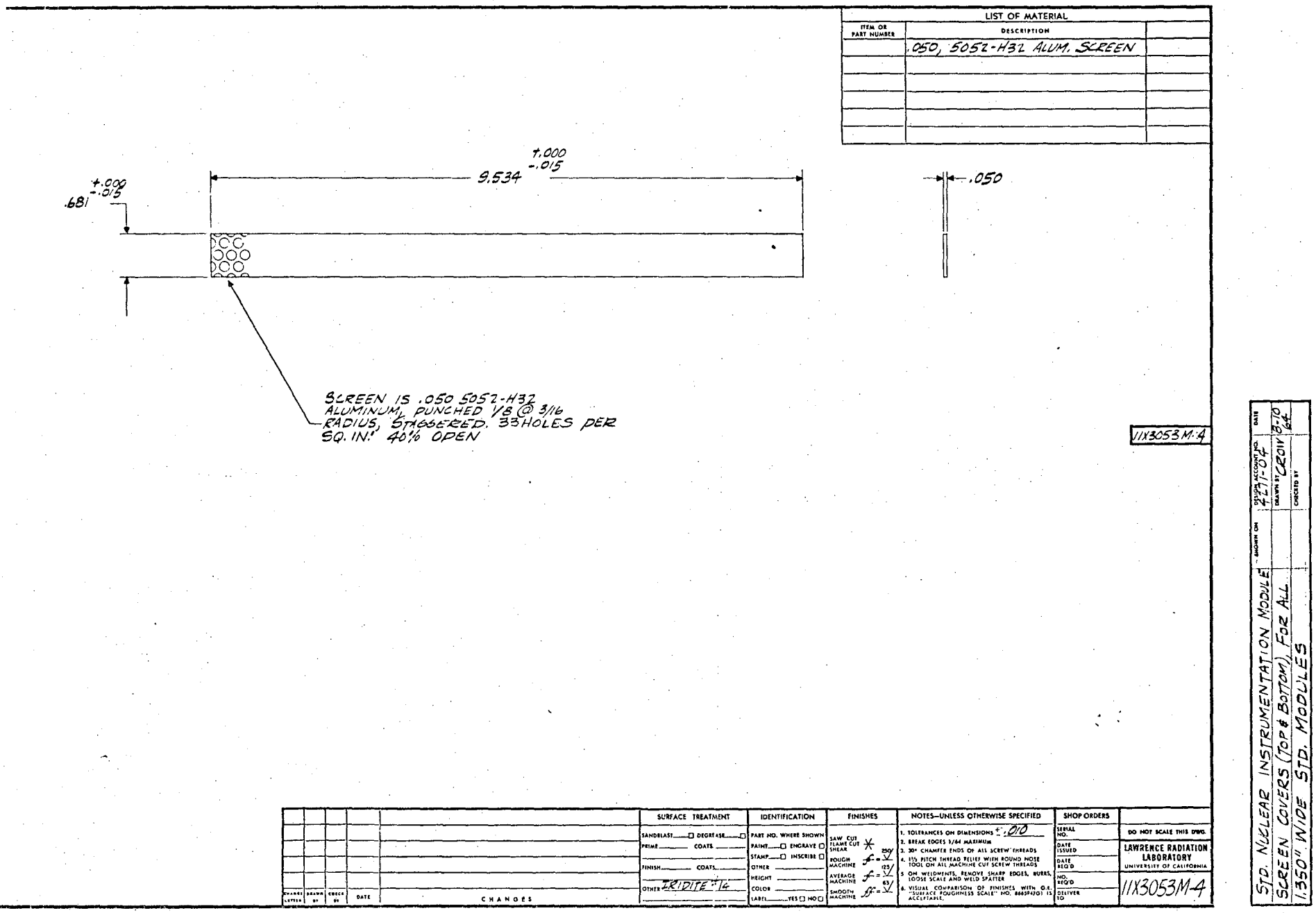
LIST OF MATERIAL
ITEM OR PART NUMBER
DESCRIPTION
.050, 5052-H32 ALUM. SCREEN
9.534 +.000 -.015
.681 +.000 -.015
.050
SCREEN IS .050 5052-H32 ALUMINUM, PUNCHED 1/8 @ 3/16 RADIUS, STAGGERED. 33 HOLES PER SQ. IN. 40% OPEN
11X3053M-4
STD. NUCLEAR INSTRUMENTATION MODULE
SCREEN COVERS (TOP & BOTTOM), FOR ALL
1.350" WIDE STD. MODULES
DESIGN ACCOUNT NO. 4271-04
DRAWN BY CROIV
CHECKED BY
DATE 8-10 64
SURFACE TREATMENT
SANDBLAST DEGREASE
PRIME COATS
FINISH COATS
OTHER IRIDITE #14
IDENTIFICATION
PART NO. WHERE SHOWN
PAINT ENGRAVE
STAMP INSCRIBE
OTHER
HEIGHT
COLOR
LABEL YES NO
FINISHES
SAW CUT FLAME CUT SHEAR
ROUGH MACHINE
AVERAGE MACHINE
SMOOTH MACHINE
NOTES—UNLESS OTHERWISE SPECIFIED
1. TOLERANCES ON DIMENSIONS ± .010
2. BREAK EDGES 1/64 MAXIMUM
3. 30° CHAMFER ENDS OF ALL SCREW THREADS
4. 1½ PITCH THREAD RELIEF WITH ROUND NOSE TOOL ON ALL MACHINE CUT SCREW THREADS
5. ON WELDMENTS, REMOVE SHARP EDGES, BURRS, LOOSE SCALE AND WELD SPATTER
6. VISUAL COMPARISON OF FINISHES WITH O.E. "SURFACE ROUGHNESS SCALE" NO. 8665942G1 IS ACCEPTABLE.
SHOP ORDERS
SERIAL NO.
DATE ISSUED
DATE REQ'D
NO. REQ'D
DELIVER TO
DO NOT SCALE THIS DWG.
LAWRENCE RADIATION LABORATORY
UNIVERSITY OF CALIFORNIA
11X3053M-4
CHANGES
DATE
CHECK BY
DRAWN BY
CHANGE LETTER

Fig. 18

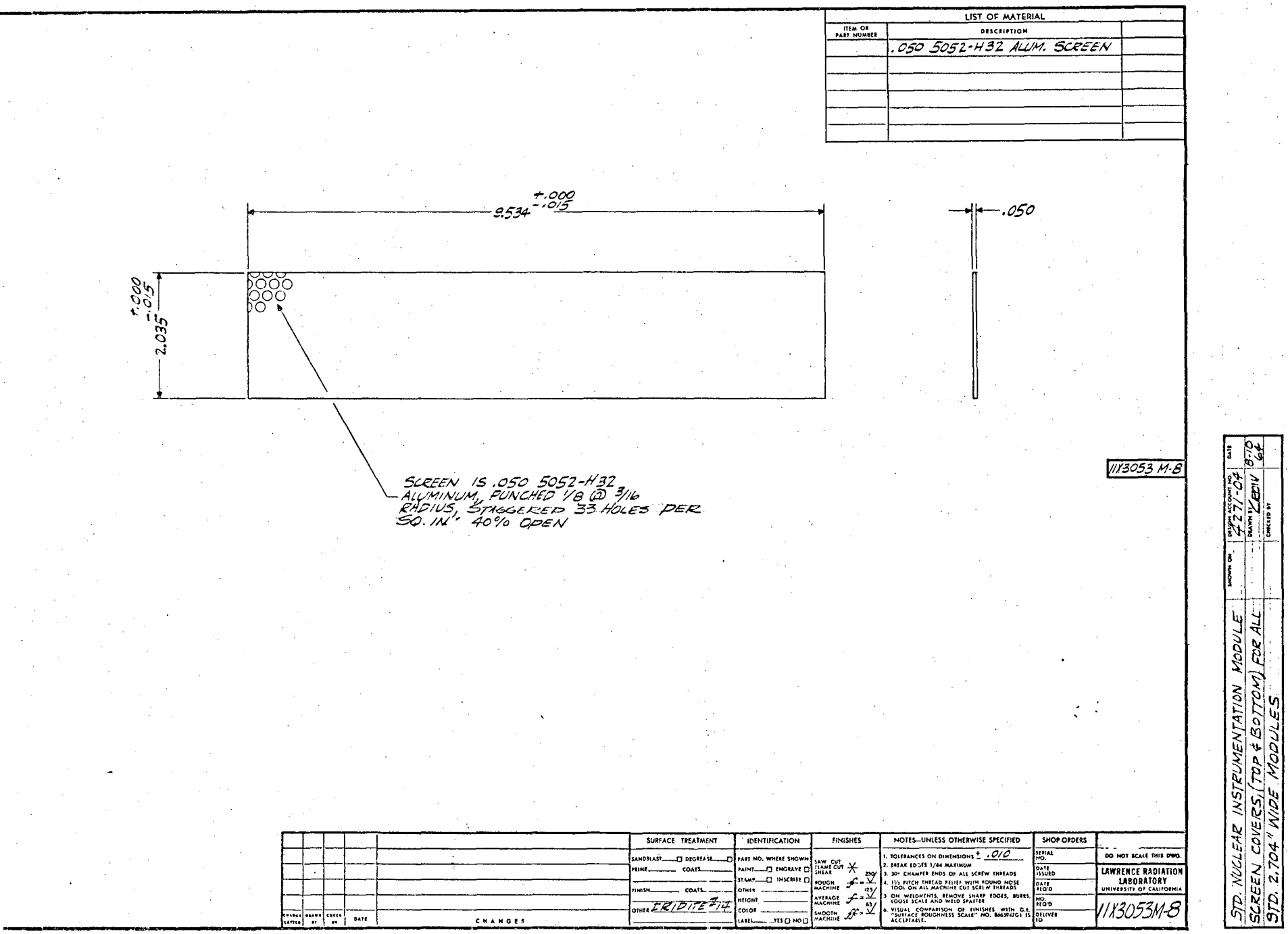
LIST OF MATERIAL
ITEM OR PART NUMBER
DESCRIPTION
.050 5052-H32 ALUM. SCREEN
9.534 +.000 -.015
.050
2.035 +.000 -.015
SCREEN IS .050 5052-H32 ALUMINUM, PUNCHED 1/8 @ 3/16 RADIUS, STAGGERED 33 HOLES PER SQ. IN. 40% OPEN
1113053 M-8
SURFACE TREATMENT
SANDBLAST DEGREASE
PRIME COATS
FINISH COATS
OTHER ERIDITE #114
IDENTIFICATION
PART NO. WHERE SHOWN
PAINT ENGRAVE
STAMP INSCRIBE
OTHER
HEIGHT
COLOR
LABEL YES NO
FINISHES
SAW CUT FLAME CUT SHEAR 250
ROUGH MACHINE 125
AVERAGE MACHINE 63
SMOOTH MACHINE
NOTES—UNLESS OTHERWISE SPECIFIED
1. TOLERANCES ON DIMENSIONS ± .010
2. BREAK EDGES 1/64 MAXIMUM
3. 30° CHAMFER ENDS OF ALL SCREW THREADS
4. 1½ PITCH THREAD RELIEF WITH ROUND NOSE TOOL ON ALL MACHINE CUT SCREW THREADS
5. ON WELDMENTS, REMOVE SHARP EDGES, BURRS, LOOSE SCALE AND WELD SPATTER
6. VISUAL COMPARISON OF FINISHES WITH O.S. "SURFACE ROUGHNESS SCALE" NO. 866947G1 IS ACCEPTABLE.
SHOP ORDERS
SERIAL NO.
DATE ISSUED
DATE REQ'D
NO. REQ'D
DELIVER TO
DO NOT SCALE THIS DWG.
LAWRENCE RADIATION LABORATORY
UNIVERSITY OF CALIFORNIA
11X3053M-8
CHANGE LETTER
DRAWN BY
CHECK BY
DATE
CHANGES
STD. NUCLEAR INSTRUMENTATION MODULE
SCREEN COVERS (TOP & BOTTOM) FOR ALL
STD. 2.704" WIDE MODULES
SHOWN ON
DESIGN ACCOUNT NO. 4277-02
DRAWN
CHECKED BY
DATE 8-10-64

Fig. 19

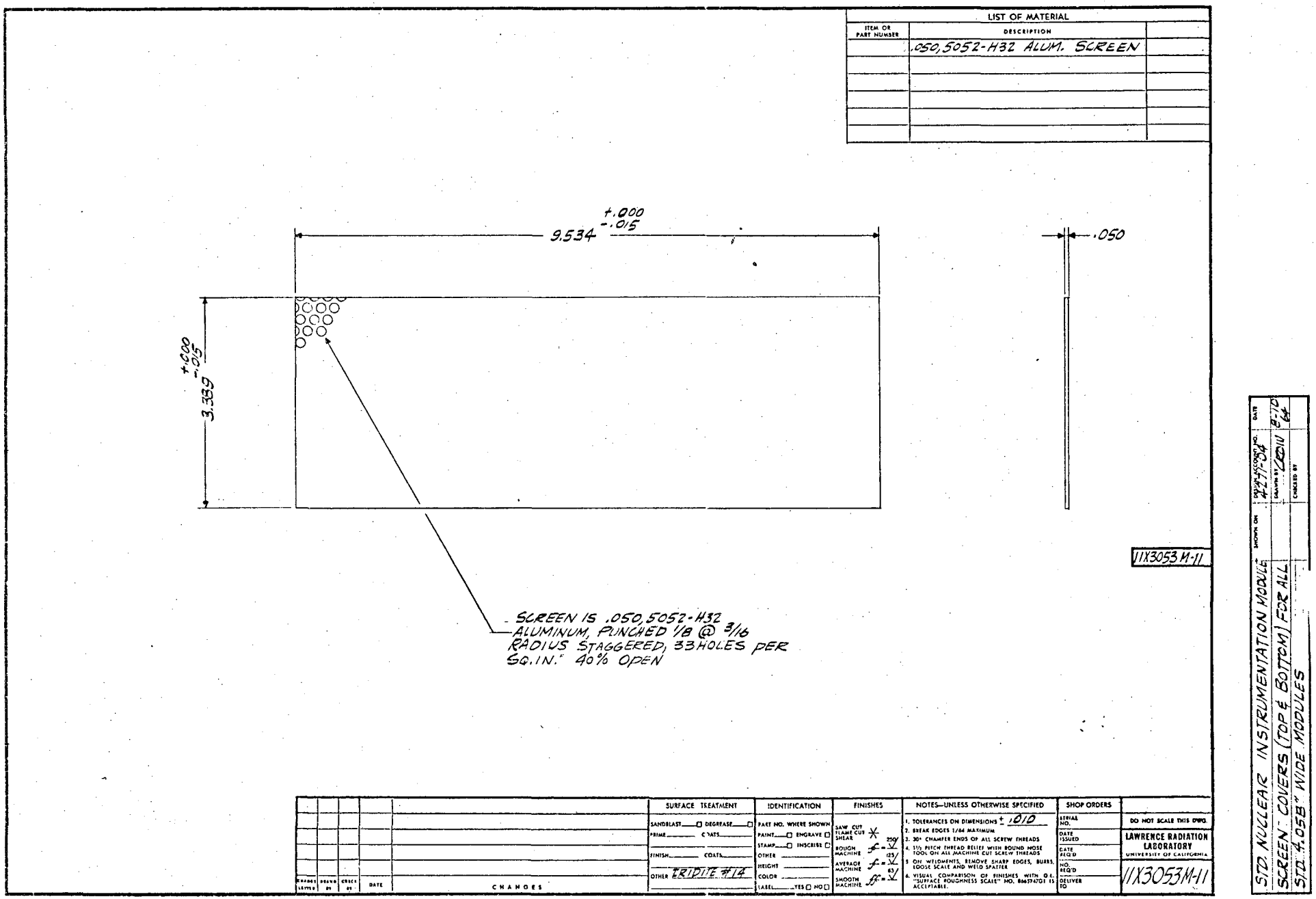
LIST OF MATERIAL
ITEM OR PART NUMBER
DESCRIPTION
.050, 5052-H32 ALUM. SCREEN
9.534 +.000 -.015
.050
3.389 +.000 -.015
11X3053 M-11
SCREEN IS .050, 5052-H32 ALUMINUM, PUNCHED 1/8 @ 3/16 RADIUS STAGGERED, 33 HOLES PER SQ. IN. 40% OPEN
SURFACE TREATMENT
SANDBLAST
DEGREASE
PRIME
COATS
FINISH
COATS
OTHER ERIDITE #14
IDENTIFICATION
PART NO. WHERE SHOWN
PAINT
ENGRAVE
STAMP
INSCRIBE
OTHER
HEIGHT
COLOR
LABEL
YES
NO
FINISHES
SAW CUT
FLAME CUT
SHEAR
250
ROUGH MACHINE
125
AVERAGE MACHINE
63
SMOOTH MACHINE
NOTES—UNLESS OTHERWISE SPECIFIED
1. TOLERANCES ON DIMENSIONS ± .010
2. BREAK EDGES 1/64 MAXIMUM.
3. 30° CHAMFER ENDS OF ALL SCREW THREADS
4. 1½ PITCH THREAD RELIEF WITH ROUND NOSE TOOL ON ALL MACHINE CUT SCREW THREADS
5. ON WELDMENTS, REMOVE SHARP EDGES, BURRS, LOOSE SCALE AND WELD SPATTER
6. VISUAL COMPARISON OF FINISHES WITH O.E. "SURFACE ROUGHNESS SCALE" NO. 846574701 IS ACCEPTABLE.
SHOP ORDERS
SERIAL NO.
DATE ISSUED
DATE REQ'D
NO. REQ'D
DELIVER TO
DO NOT SCALE THIS DWG.
LAWRENCE RADIATION LABORATORY
UNIVERSITY OF CALIFORNIA
11X3053M-11
DATE
CHANGES
STD. NUCLEAR INSTRUMENTATION MODULE
SCREEN COVERS (TOP & BOTTOM) FOR ALL
STD. 4.058" WIDE MODULES
PROJ. ACCOUNT NO.
427/-54
DRAWN BY
CHECKED BY
DATE
8-10-64

Fig. 20

LIST OF MATERIAL		
ITEM OR PART NUMBER	DESCRIPTION	
	.063 ALUMINUM 5052 H-32	
	F632-1 PEM NUT	2 EA

TABLE		
DASH NO.	DIM. "A"	MODULE NO.
- 1	1.060 ±.005	1
- 2	2.414 "	2
- 3	3.768 "	3
- 4	5.122 "	4
- 5	6.476 "	5
- 6	7.830 "	6

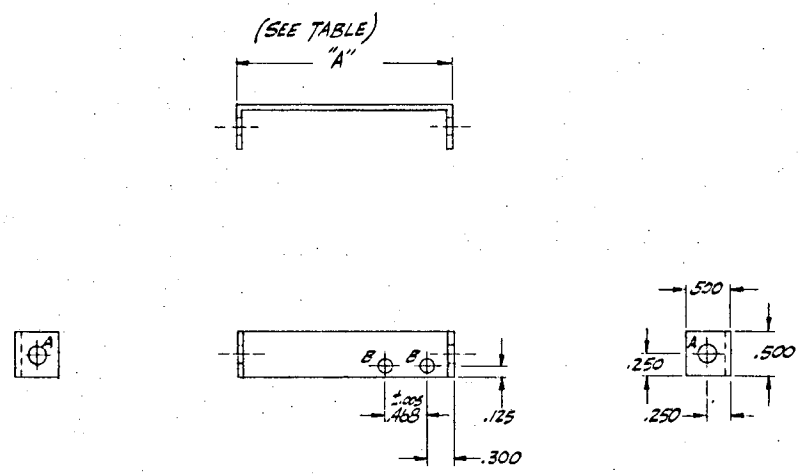

HOLE SCHEDULE	
DESIG	DESCRIPTION
A	#3 DRILL, INSTALL F632-1 PEM NUTS (2 PLS)
B	#30 DRILL (THRU) 2 PLACES

11X3053 M-13

CHANGE LETTER	DRAWN BY	CHECK BY	DATE	CHANGES

SURFACE TREATMENT: SANDBLAST ☐ DEGREASE ☐ PRIME ____ COATS ____ FINISH ____ COATS ____ OTHER IRIDITE #14

IDENTIFICATION: PART NO. WHERE SHOWN; PAINT ☐ ENGRAVE ☐; STAMP ☐ INSCRIBE ☐; OTHER ____; HEIGHT ____; COLOR ____; LABEL ____ YES ☐ NO ☐

FINISHES: SAW CUT FLAME CUT SHEAR ✳; ROUGH MACHINE f = 250/; AVERAGE MACHINE f = 125/; SMOOTH MACHINE ff = 63/

NOTES—UNLESS OTHERWISE SPECIFIED
1. TOLERANCES ON DIMENSIONS ± .010
2. BREAK EDGES 1/64 MAXIMUM
3. 30° CHAMFER ENDS OF ALL SCREW THREADS
4. 1½ PITCH THREAD RELIEF WITH ROUND NOSE TOOL ON ALL MACHINE CUT SCREW THREADS
5. ON WELDMENTS, REMOVE SHARP EDGES, BURRS, LOOSE SCALE AND WELD SPATTER
6. VISUAL COMPARISON OF FINISHES WITH G.E. "SURFACE ROUGHNESS SCALE" NO. 8665947G1 IS ACCEPTABLE.

SHOP ORDERS: SERIAL NO. ____; DATE ISSUED ____; DATE REQ'D ____; NO. REQ'D ____; DELIVER TO ____

DO NOT SCALE THIS DWG.

LAWRENCE RADIATION LABORATORY
UNIVERSITY OF CALIFORNIA

11X3053 M-13

STD. NUCLEAR INSTRUMENTATION BIN
MODULE - SIDE COVER FASTENER
BRACKET

SHOWN ON: DESIGN ACCOUNT NO. 4271-04 DATE 8-26-64
DRAWN BY CROW
CHECKED BY

Fig. 21

HOLE SCHEDULE	
DESIG	DESCRIPTION
A	DRILL #31 (4 HOLES)
B	F DRILL C'SINK 82° .020
	DEEP ON REAR OF PANEL
C	#52 DRILL 1/16" DEEP (4 HOLES)

11X3152M-1 LIST OF MATERIAL		
ITEM OR PART NUMBER	DESCRIPTION	
	.125 ALUM. 6061 T-6	

NOTE:
1. ALL CORNERS ARE 90° ±.1° (4)

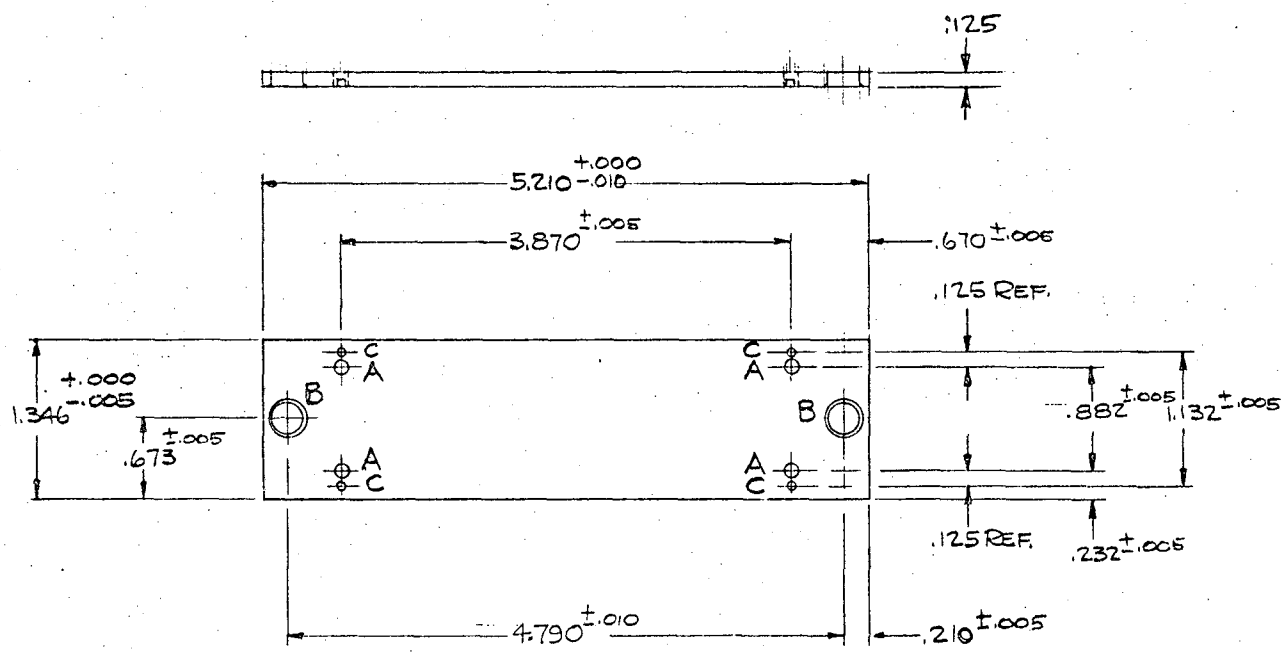

REAR VIEW

CHANGE LETTER	DRAWN BY	CHECK BY	DATE	CHANGES

SURFACE TREATMENT	IDENTIFICATION	FINISHES	NOTES—UNLESS OTHERWISE SPECIFIED	SHOP ORDERS
SANDBLAST ☐ DEGREASE ☐	PART NO. WHERE SHOWN	SAW CUT FLAME CUT SHEAR ✕	1. TOLERANCES ON DIMENSIONS ± .010	SERIAL NO.
PRIME COATS	PAINT ☐ ENGRAVE ☐		2. BREAK EDGES 1/64 MAXIMUM	DATE ISSUED
	STAMP ☐ INSCRIBE ☐	ROUGH MACHINE 250	3. 30° CHAMFER ENDS OF ALL SCREW THREADS	DATE REQ'D
FINISH COATS	OTHER	AVERAGE MACHINE 125	4. 1½ PITCH THREAD RELIEF WITH ROUND NOSE TOOL ON ALL MACHINE CUT SCREW THREADS	NO. REQ'D
OTHER IRIDITE #14	HEIGHT	SMOOTH MACHINE 63	5. ON WELDMENTS, REMOVE SHARP EDGES, BURRS, LOOSE SCALE AND WELD SPATTER	DELIVER TO
	COLOR		6. VISUAL COMPARISON OF FINISHES WITH O.E. "SURFACE ROUGHNESS SCALE" NO. 866594701 IS ACCEPTABLE.	
	LABEL YES ☐ NO ☐			

DO NOT SCALE THIS DWG.

LAWRENCE RADIATION LABORATORY
UNIVERSITY OF CALIFORNIA

11X3152M-1

SHOWN ON	DESIGN ACCOUNT NO. 4271-04	DATE
	DRAWN BY CROW	8-10-64
	CHECKED BY	

STD FRONT PANEL FOR #1 MODULE
FOR STD 5¼" NUCLEAR INSTRUMENTATION
BIN

Fig. 22

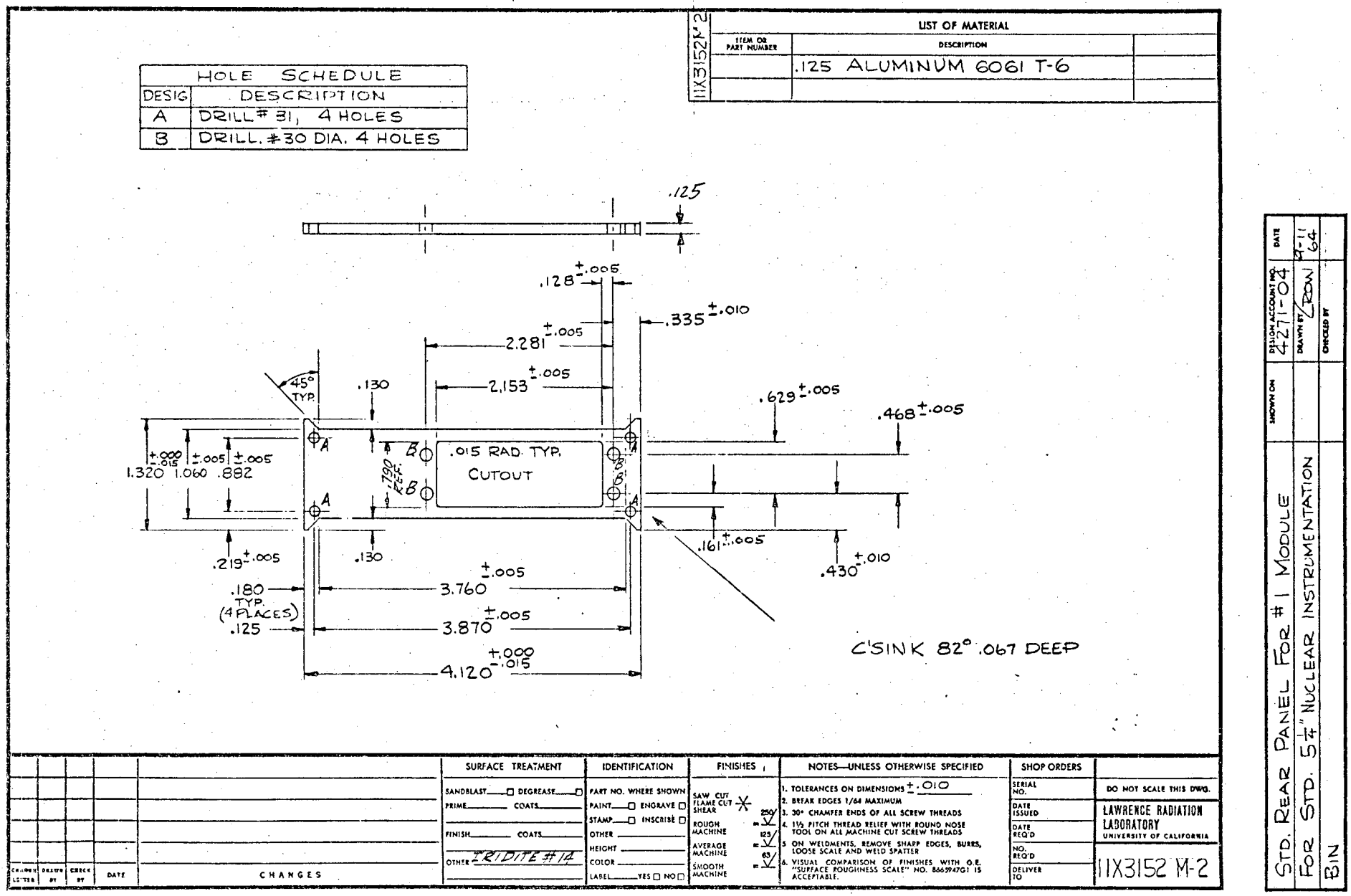

HOLE SCHEDULE
DESIG | DESCRIPTION
A | DRILL # 31, 4 HOLES
B | DRILL. #30 DIA. 4 HOLES
11X3152M2
LIST OF MATERIAL
ITEM OR PART NUMBER
DESCRIPTION
.125 ALUMINUM 6061 T-6
.125
.128 ±.005
.335 ±.010
2.281 ±.005
2.153 ±.005
45° TYP.
.130
.629 ±.005
.468 ±.005
.015 RAD. TYP.
CUTOUT
.790 REF.
1.320 +.000 -.015
1.060 ±.005
.882 ±.005
.219 ±.005
.130
.161 ±.005
.430 ±.010
.180 TYP. (4 PLACES)
.125
3.760 ±.005
3.870 ±.005
4.120 +.000 -.015
C'SINK 82° .067 DEEP
SURFACE TREATMENT
SANDBLAST DEGREASE
PRIME COATS
FINISH COATS
OTHER IRIDITE #14
IDENTIFICATION
PART NO. WHERE SHOWN
PAINT ENGRAVE
STAMP INSCRIBE
OTHER
HEIGHT
COLOR
LABEL YES NO
FINISHES
SAW CUT FLAME CUT SHEAR
ROUGH MACHINE 250
AVERAGE MACHINE 125
SMOOTH MACHINE 63
NOTES—UNLESS OTHERWISE SPECIFIED
1. TOLERANCES ON DIMENSIONS ±.010
2. BREAK EDGES 1/64 MAXIMUM
3. 30° CHAMFER ENDS OF ALL SCREW THREADS
4. 1½ PITCH THREAD RELIEF WITH ROUND NOSE TOOL ON ALL MACHINE CUT SCREW THREADS
5. ON WELDMENTS, REMOVE SHARP EDGES, BURRS, LOOSE SCALE AND WELD SPATTER
6. VISUAL COMPARISON OF FINISHES WITH G.E. "SURFACE ROUGHNESS SCALE" NO. 8665947G1 IS ACCEPTABLE.
SHOP ORDERS
SERIAL NO.
DATE ISSUED
DATE REQ'D
NO. REQ'D
DELIVER TO
DO NOT SCALE THIS DWG.
LAWRENCE RADIATION LABORATORY
UNIVERSITY OF CALIFORNIA
11X3152 M-2
CHANGES
DATE
CHECK BY
DRAWN BY
CHANGE LETTER
SHOWN ON
DESIGN ACCOUNT NO. 4271-04
DATE
DRAWN BY
CHECKED BY
STD. REAR PANEL FOR #1 MODULE
FOR STD. 5¼" NUCLEAR INSTRUMENTATION
BIN

Fig. 23

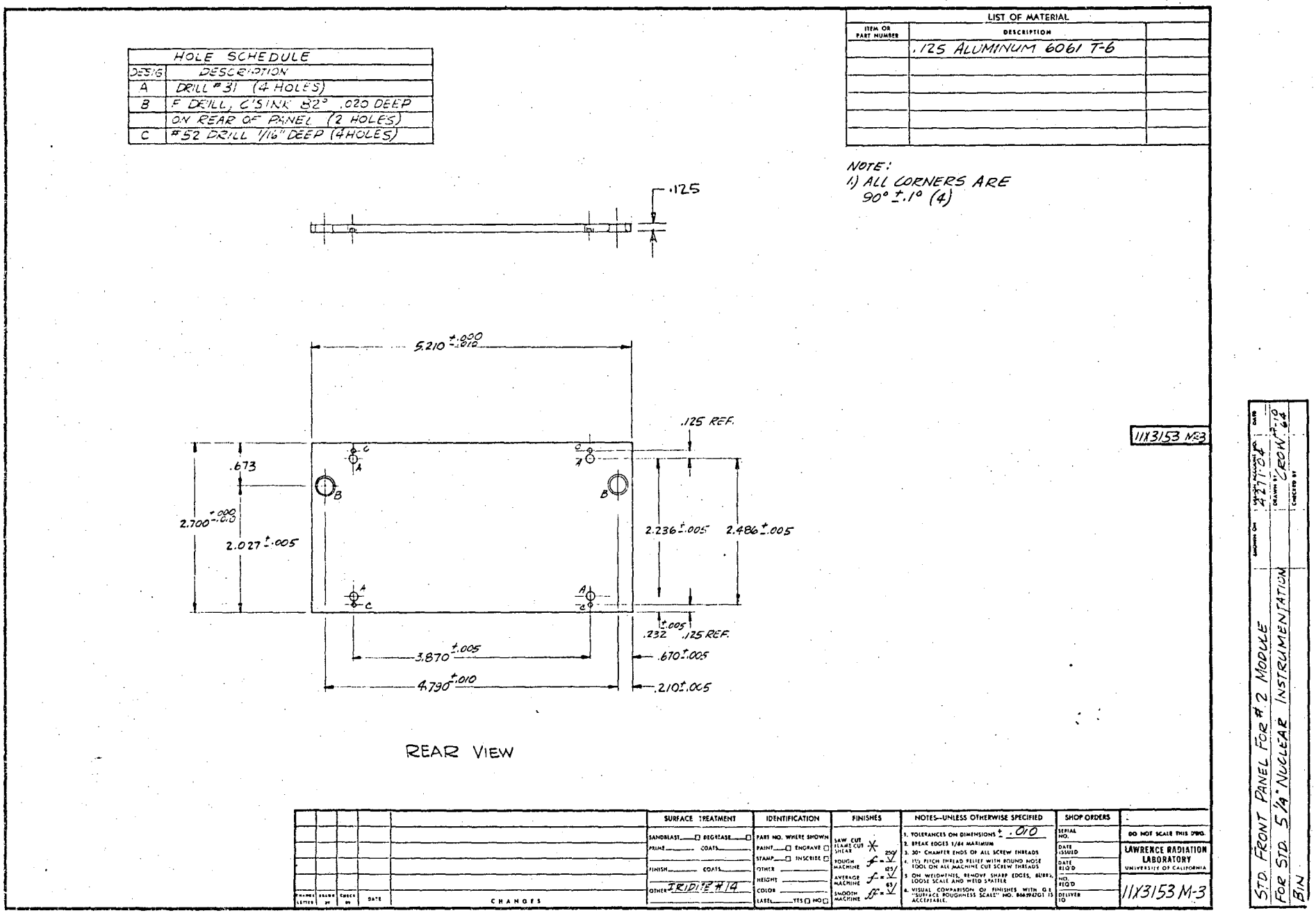
HOLE SCHEDULE
DESIG | DESCRIPTION
A | DRILL #31 (4 HOLES)
B | F DRILL, C'SINK 82° .020 DEEP
ON REAR OF PANEL (2 HOLES)
C | #52 DRILL 1/16" DEEP (4 HOLES)
LIST OF MATERIAL
ITEM OR PART NUMBER | DESCRIPTION
.125 ALUMINUM 6061 T-6
NOTE:
1) ALL CORNERS ARE 90° ±.1° (4)
.125
5.210 +.000 -.010
.125 REF.
.673
2.700 +.000 -.010
2.027 ±.005
2.236 ±.005
2.486 ±.005
.232 ±.005
.125 REF.
3.870 ±.005
4.790 ±.010
.670 ±.005
.210 ±.005
REAR VIEW
11X3153 M-3
SURFACE TREATMENT
SANDBLAST DEGREASE
PRIME COATS
FINISH COATS
OTHER IRIDITE #14
IDENTIFICATION
PART NO. WHERE SHOWN
PAINT ENGRAVE
STAMP INSCRIBE
OTHER
HEIGHT
COLOR
LABEL YES NO
FINISHES
SAW CUT FLAME CUT SHEAR
ROUGH MACHINE
AVERAGE MACHINE
SMOOTH MACHINE
NOTES—UNLESS OTHERWISE SPECIFIED
1. TOLERANCES ON DIMENSIONS ± .010
2. BREAK EDGES 1/64 MAXIMUM
3. 30° CHAMFER ENDS OF ALL SCREW THREADS
4. 1½ PITCH THREAD RELIEF WITH ROUND NOSE TOOL ON ALL MACHINE CUT SCREW THREADS
5. ON WELDMENTS, REMOVE SHARP EDGES, BURRS, LOOSE SCALE AND WELD SPATTER
6. VISUAL COMPARISON OF FINISHES WITH G.E. "SURFACE ROUGHNESS SCALE" NO. 8663942G1 IS ACCEPTABLE.
SHOP ORDERS
SERIAL NO.
DATE ISSUED
DATE REQ'D
NO. REQ'D
DELIVER TO
DO NOT SCALE THIS DWG.
LAWRENCE RADIATION LABORATORY
UNIVERSITY OF CALIFORNIA
11X3153 M-3
CHANGES
DATE
CHECK BY
DRAWN BY
CHANGE LETTER
STD. FRONT PANEL FOR #2 MODULE
FOR STD. 5 1/4" NUCLEAR INSTRUMENTATION
BIN
SHOWN ON
4271-04
DRAWN BY CROW
CHECKED BY

Fig. 24

HOLE SCHEDULE	
DES G	DESCRIPTION
A	DRILL # 31 (4 HOLES)
B	DRILL # 30 (4 HOLES)

LIST OF MATERIAL		
ITEM OR PART NUMBER	DESCRIPTION	
	.125 ALUM. 6061 T-6	

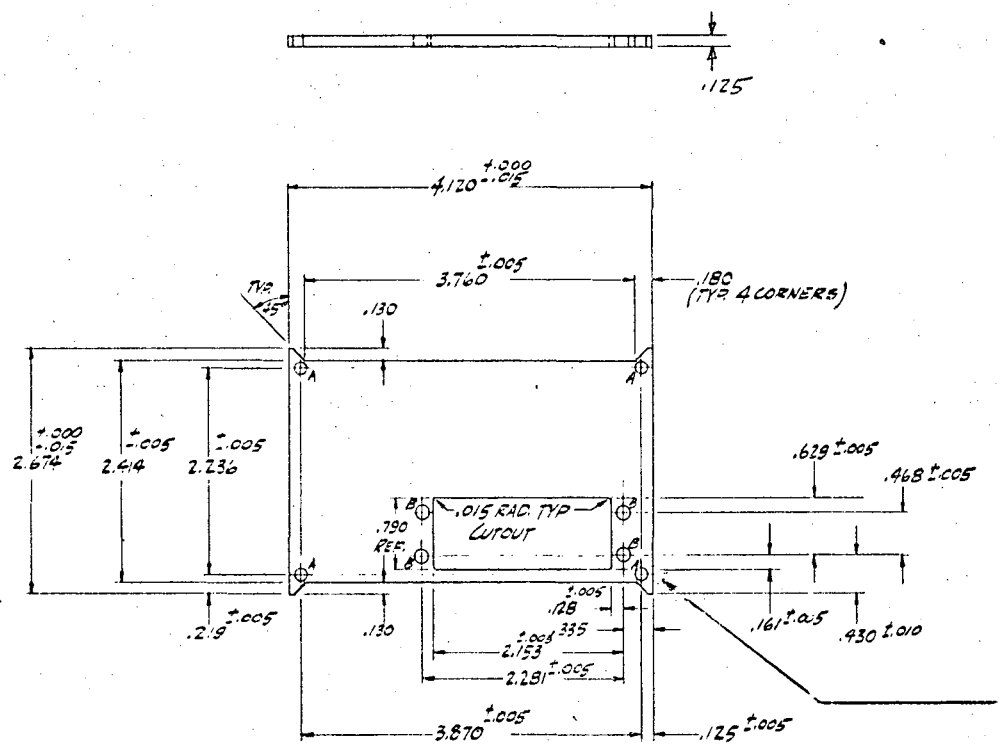

11X3153 M-4

SURFACE TREATMENT	IDENTIFICATION	FINISHES	NOTES—UNLESS OTHERWISE SPECIFIED	SHOP ORDERS
SANDBLAST ☐ DEGREASE ☐	PART NO. WHERE SHOWN	SAW CUT, FLAME CUT, SHEAR X	1. TOLERANCES ON DIMENSIONS ± .010	SERIAL NO.
PRIME ____ COATS ____	PAINT ☐ ENGRAVE ☐		2. BREAK EDGES 1/64 MAXIMUM	DATE ISSUED
	STAMP ☐ INSCRIBE ☐	ROUGH MACHINE 250/	3. 30° CHAMFER ENDS OF ALL SCREW THREADS	
FINISH ____ COATS ____	OTHER	AVERAGE MACHINE 125/	4. 1½ PITCH THREAD RELIEF WITH POUND NOSE TOOL ON ALL MACHINE CUT SCREW THREADS	DATE REQ'D
OTHER ERIDITE #14	HEIGHT	SMOOTH MACHINE 63/	5. ON WELDMENTS, REMOVE SHARP EDGES, BURRS, LOOSE SCALE AND WELD SPATTER	NO. REQ'D
	COLOR		6. VISUAL COMPARISON OF FINISHES WITH G.E. "SURFACE ROUGHNESS SCALE" NO. 8669A701 IS ACCEPTABLE.	DELIVER TO
	LABEL ____ YES ☐ NO ☐			

CHANGE LETTER	DRAWN BY	CHECK BY	DATE	CHANGES

DO NOT SCALE THIS DWG.

LAWRENCE RADIATION LABORATORY
UNIVERSITY OF CALIFORNIA

11X3153 M-4

STD REAR PANEL FOR #2 MODULE FOR STD 5¼" NUCLEAR INSTRUMENTATION BIN			
	DRAWN BY	CHECKED BY	DATE
	CROW		9-10-64

Fig. 25

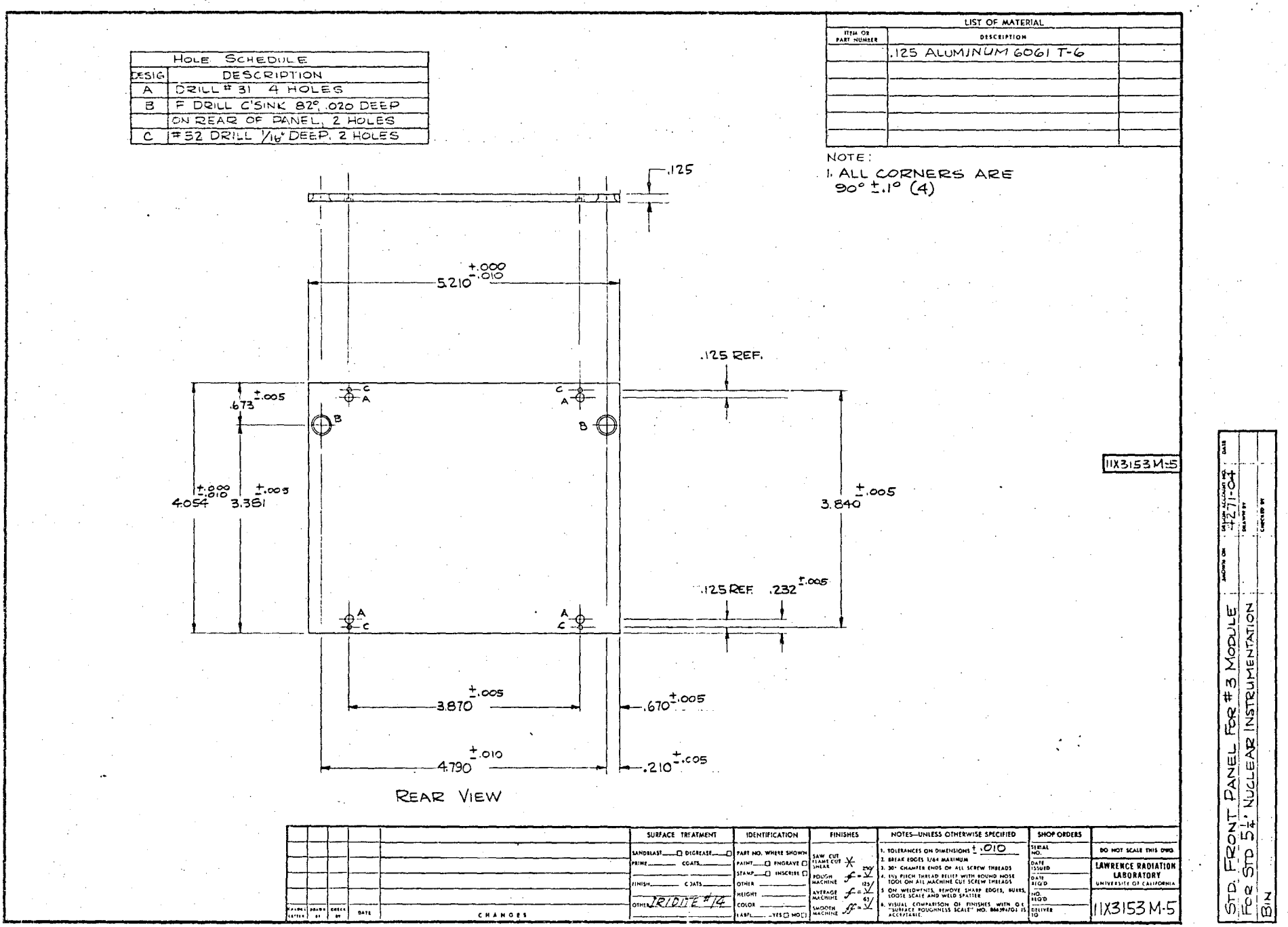
HOLE SCHEDULE
DESIG | DESCRIPTION
A | DRILL # 31 4 HOLES
B | F DRILL C'SINK 82°, .020 DEEP
ON REAR OF PANEL, 2 HOLES
C | #52 DRILL 1/16" DEEP, 2 HOLES
LIST OF MATERIAL
ITEM OR PART NUMBER | DESCRIPTION
.125 ALUMINUM 6061 T-6
NOTE:
1. ALL CORNERS ARE 90° ±.1° (4)
.125
5.210 +.000 -.010
.125 REF.
.673 ±.005
4.054 +.000 -.010
3.381 ±.005
3.840 ±.005
.125 REF.
.232 ±.005
3.870 ±.005
.670 ±.005
4.790 ±.010
.210 ±.005
REAR VIEW
11X3153M-5
SURFACE TREATMENT
SANDBLAST DEGREASE
PRIME COATS
FINISH COATS
OTHER IRIDITE #14
IDENTIFICATION
PART NO. WHERE SHOWN
PAINT ENGRAVE
STAMP INSCRIBE
OTHER
HEIGHT
COLOR
LABEL YES NO
FINISHES
SAW CUT FLAME CUT SHEAR
ROUGH MACHINE
AVERAGE MACHINE
SMOOTH MACHINE
NOTES—UNLESS OTHERWISE SPECIFIED
1. TOLERANCES ON DIMENSIONS ±.010
2. BREAK EDGES 1/64 MAXIMUM
3. 30° CHAMFER ENDS OF ALL SCREW THREADS
4. 1½ PITCH THREAD RELIEF WITH ROUND NOSE TOOL ON ALL MACHINE CUT SCREW THREADS
5. ON WELDMENTS, REMOVE SHARP EDGES, BURRS, LOOSE SCALE AND WELD SPATTER
6. VISUAL COMPARISON OF FINISHES WITH O.E. "SURFACE ROUGHNESS SCALE" NO. 8669-7G1 IS ACCEPTABLE.
SHOP ORDERS
SERIAL NO.
DATE ISSUED
DATE REQ'D
NO. REQ'D
DELIVER TO
DO NOT SCALE THIS DWG.
LAWRENCE RADIATION LABORATORY
UNIVERSITY OF CALIFORNIA
11X3153M-5
CHANGES
DATE
STD. FRONT PANEL FOR #3 MODULE
FOR STD 5¼" NUCLEAR INSTRUMENTATION
BIN
4271-04

Fig. 26

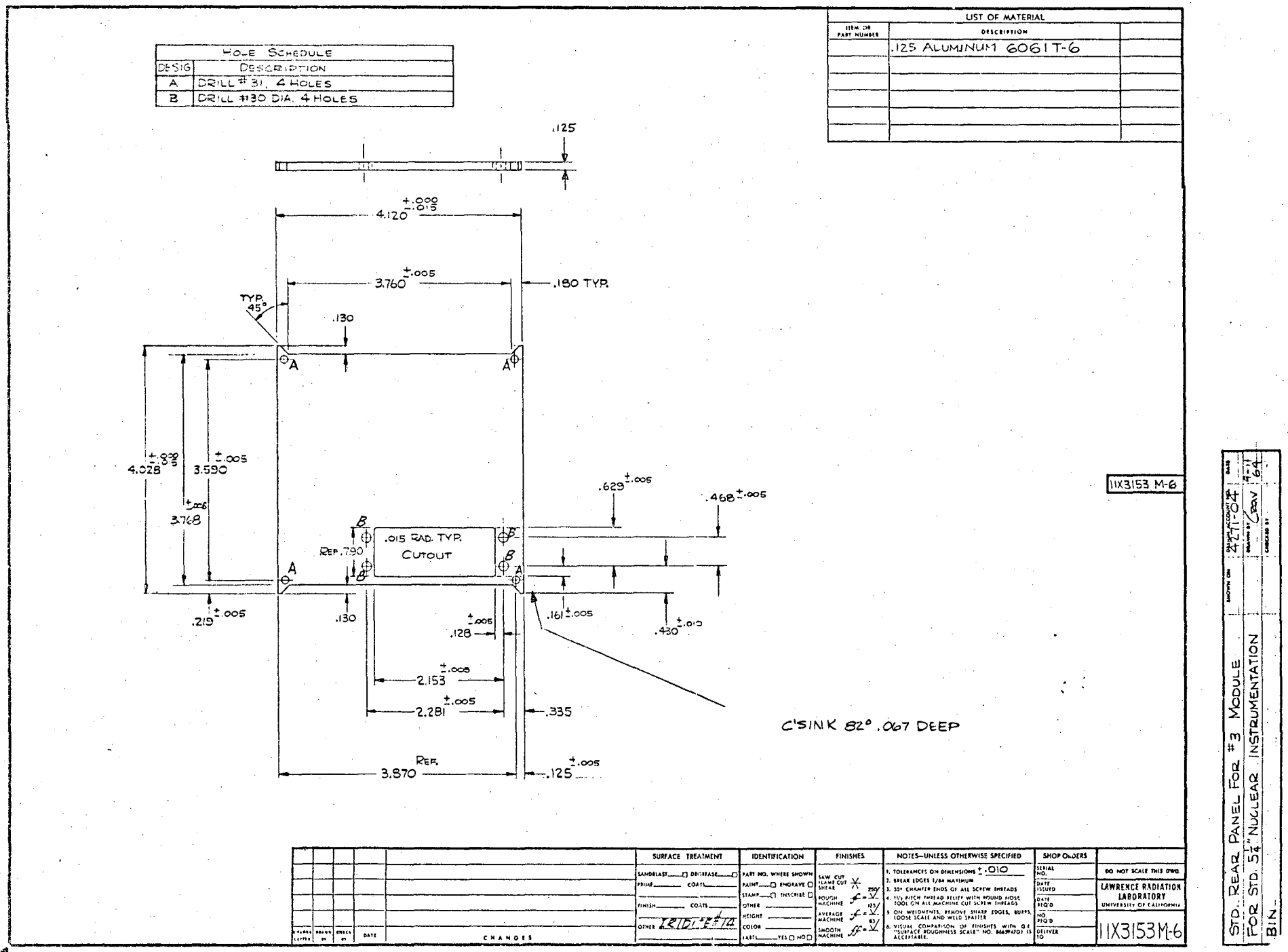
HOLE SCHEDULE
DESIG | DESCRIPTION
A | DRILL #31, 4 HOLES
B | DRILL #30 DIA. 4 HOLES
LIST OF MATERIAL
ITEM OR PART NUMBER | DESCRIPTION
.125 ALUMINUM 6061 T-6
.125
4.120 +.000 -.015
3.760 ±.005
.180 TYP.
TYP. 45°
.130
A
4.028 +.000 -.015
3.590 ±.005
3.768 ±.005
.629 ±.005
.468 ±.005
B
.015 RAD. TYP. CUTOUT
REF. .790
.219 ±.005
.130
.128 ±.005
.161 ±.005
.430 ±.010
2.153 ±.005
2.281 ±.005
.335
C'SINK 82° .067 DEEP
REF. 3.870
.125 ±.005
11X3153 M-6
SURFACE TREATMENT
SANDBLAST DEGREASE
PRIME COATS
FINISH COATS
OTHER IRIDITE #14
IDENTIFICATION
PART NO. WHERE SHOWN
PAINT ENGRAVE
STAMP INSCRIBE
OTHER
HEIGHT
COLOR
LABEL YES NO
FINISHES
SAW CUT FLAME CUT SHEAR
ROUGH MACHINE
AVERAGE MACHINE
SMOOTH MACHINE
NOTES—UNLESS OTHERWISE SPECIFIED
1. TOLERANCES ON DIMENSIONS ±.010
2. BREAK EDGES 1/64 MAXIMUM
3. 30° CHAMFER ENDS OF ALL SCREW THREADS
4. 1½ PITCH THREAD RELIEF WITH ROUND NOSE TOOL ON ALL MACHINE CUT SCREW THREADS
5. ON WELDMENTS, REMOVE SHARP EDGES, BURRS, LOOSE SCALE AND WELD SPATTER
6. VISUAL COMPARISON OF FINISHES WITH G.E. "SURFACE ROUGHNESS SCALE" NO. 86659470T IS ACCEPTABLE.
SHOP ORDERS
SERIAL NO.
DATE ISSUED
DATE REQ'D
NO. REQ'D
DELIVER TO
DO NOT SCALE THIS DWG.
LAWRENCE RADIATION LABORATORY
UNIVERSITY OF CALIFORNIA
11X3153M-6
CHANGES
DATE
STD. REAR PANEL FOR #3 MODULE
FOR STD. 5¼" NUCLEAR INSTRUMENTATION
BIN
4271-04
CRAV
9-11-64

Fig. 27

Group III of illustrations

Construction drawings for 5-1/4-inch instrumentation bin

Page number	Figure number	LRL Drawing number	Title	Number required
35	28	11X3143 A-1	Overall assembly	-
36	29	11X3144 A-2	Cross-section assembly	-
37	30	11X3044 M-10	Top view and module guide detail	-
38	31	11X3053 M-9A	Module guide (top and bottom)	24
39	32	11X3321 M-1A	Aluminum extrusion for front frame braces	-
40	33	11X3321 M-2A	Aluminum extrusion for rear frame braces	-
41	34	11X3321 M-3A	Aluminum extrusion for front and rear main frame braces	-
42	35	11X3044 M-5	Main frame, front top	1
43	36	11X3044 M-13	Main frame, front bottom	1
44	37	11X3044 M-8	Punched screen, top and bottom bin covers	2
45	38	11X3044 M-7	Main frame, rear top	1
46	39	11X3044 M-6	Main frame, bottom rear	1
47	40	11X3144 M-2	Front frame brace	2
48	41	11X3144 M-5	Side covers (right side)	1
49	42	11X3144 M-6	Side cover (left side)	1
50	43	11X3144 M-1	Rear frame brace	2
51	44	11X3044 M-4	Rear connector panel	1

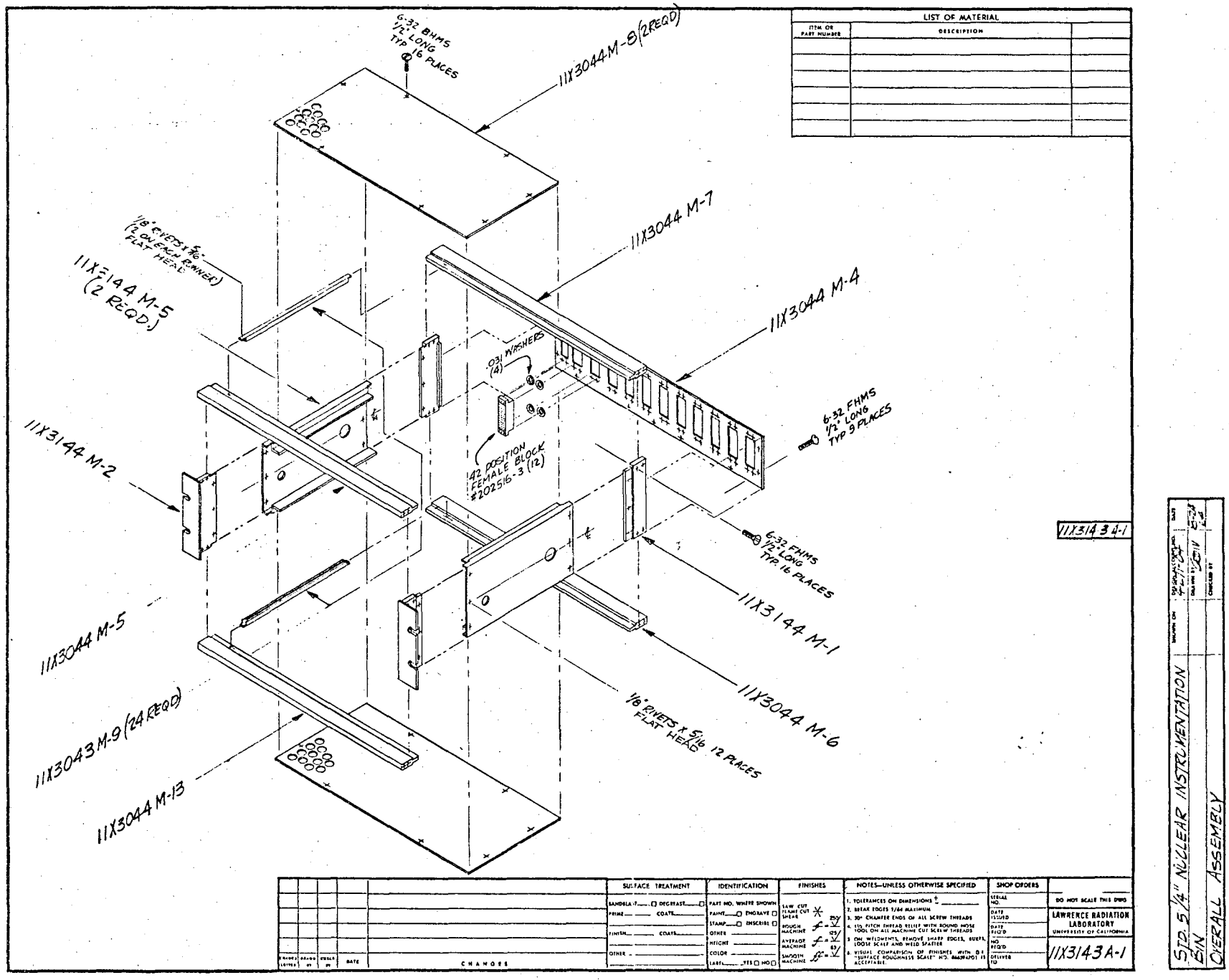
LIST OF MATERIAL
ITEM OR PART NUMBER
DESCRIPTION
6-32 BHMS 1/2" LONG TYP 16 PLACES
11X3044M-8 (2 REQD)
11X3044 M-7
11X3044 M-4
1/8" RIVETS x 5/16" (2 ON EACH RUNNER) FLAT HEAD
11X3144 M-5 (2 REQD.)
.031 WASHERS (4)
.42 POSITION FEMALE BLOCK #202516-3 (12)
6-32 FHMS 1/2" LONG TYP 9 PLACES
11X3144 M-2
6-32 FHMS 1/2" LONG TYP. 16 PLACES
11X3144 M-1
11X3044 M-5
11X3044 M-6
1/8" RIVETS x 5/16 12 PLACES FLAT HEAD
11X3043M-9 (24 REQD)
11X3044 M-13
11X3143 A-1
SURFACE TREATMENT
IDENTIFICATION
FINISHES
NOTES—UNLESS OTHERWISE SPECIFIED
SHOP ORDERS
DO NOT SCALE THIS DWG
LAWRENCE RADIATION LABORATORY
UNIVERSITY OF CALIFORNIA
11X3143A-1
CHANGES
STD. 5 1/4" NUCLEAR INSTRUMENTATION
BIN
OVERALL ASSEMBLY

Fig. 28

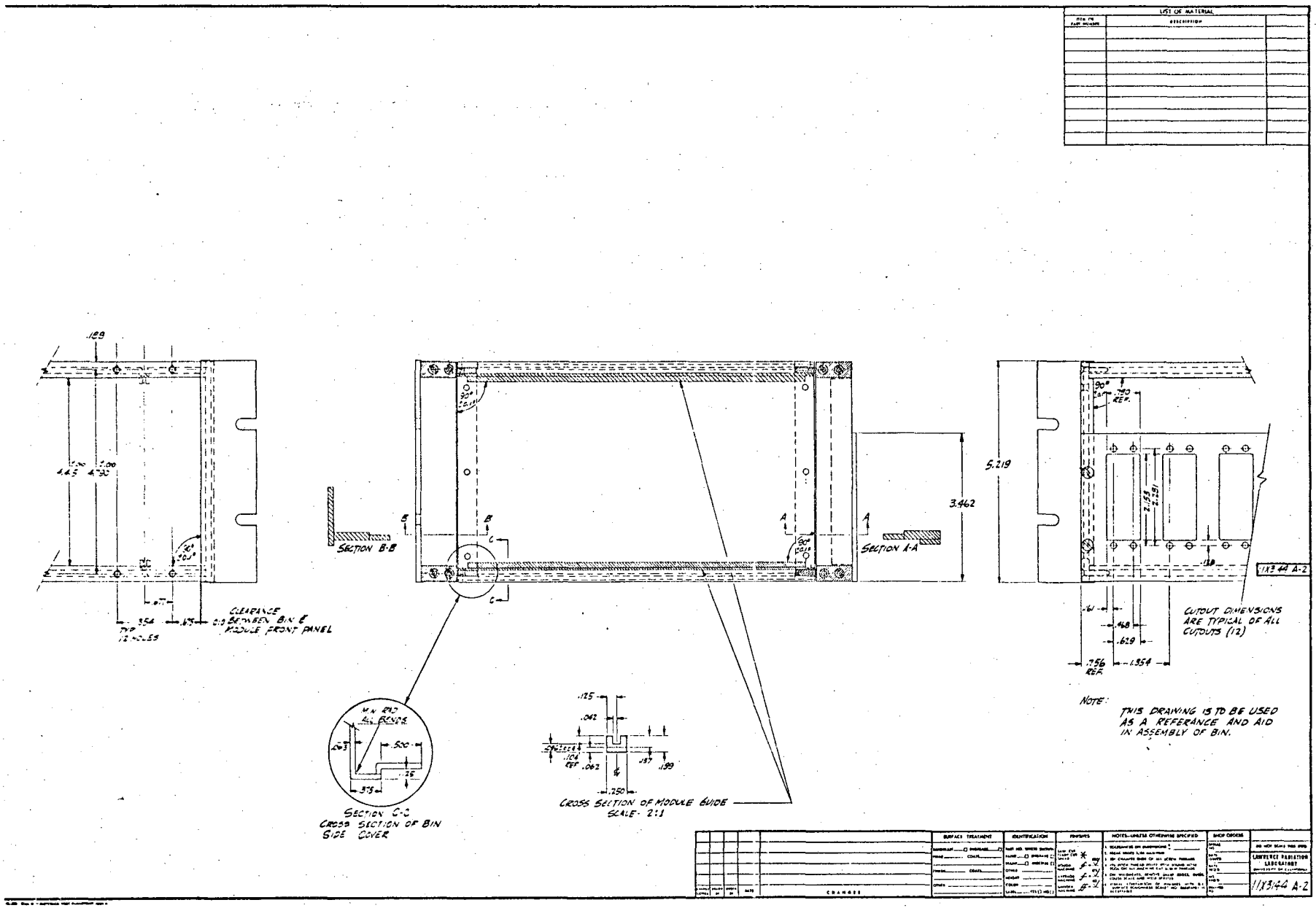
LIST OF MATERIAL
SECTION B-B
SECTION A-A
3.462
5.219
CLEARANCE BETWEEN BIN & MODULE FRONT PANEL
CUTOUT DIMENSIONS ARE TYPICAL OF ALL CUTOUTS (12)
NOTE: THIS DRAWING IS TO BE USED AS A REFERANCE AND AID IN ASSEMBLY OF BIN.
SECTION C-C
CROSS SECTION OF BIN SIDE COVER
CROSS SECTION OF MODULE GUIDE
SCALE- 2:1
LAWRENCE RADIATION LABORATORY
11X3144 A-2

Fig. 29

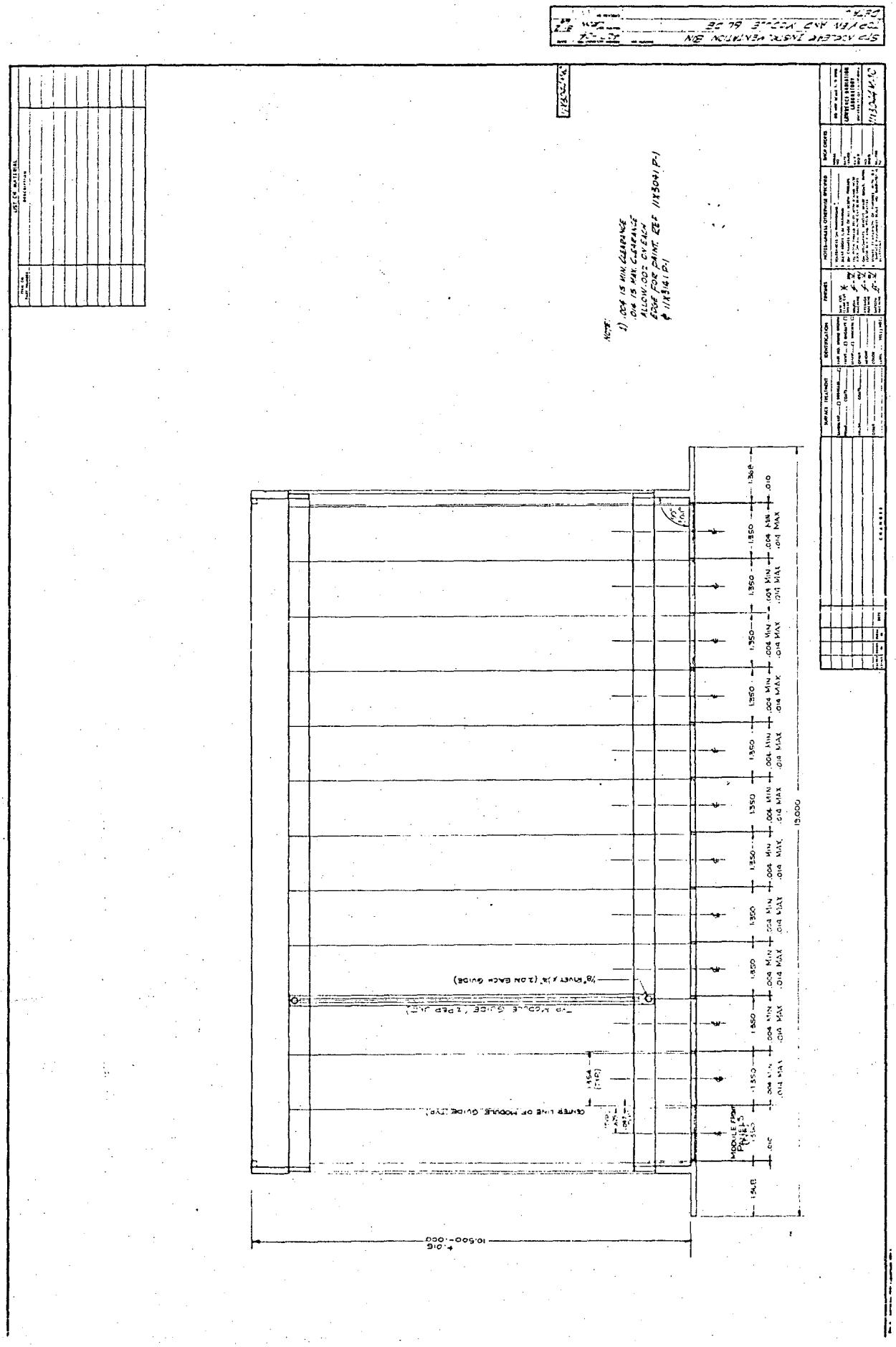
NOTE:
1) .004 IS MIN. CLEARANCE
.014 IS MAX. CLEARANCE
ALLOW .002 ON EACH
EDGE FOR PAINT. REF 11X3041 P-1
& 11X3141 P-1
19.000
10.500-.000
+.016

Fig. 30

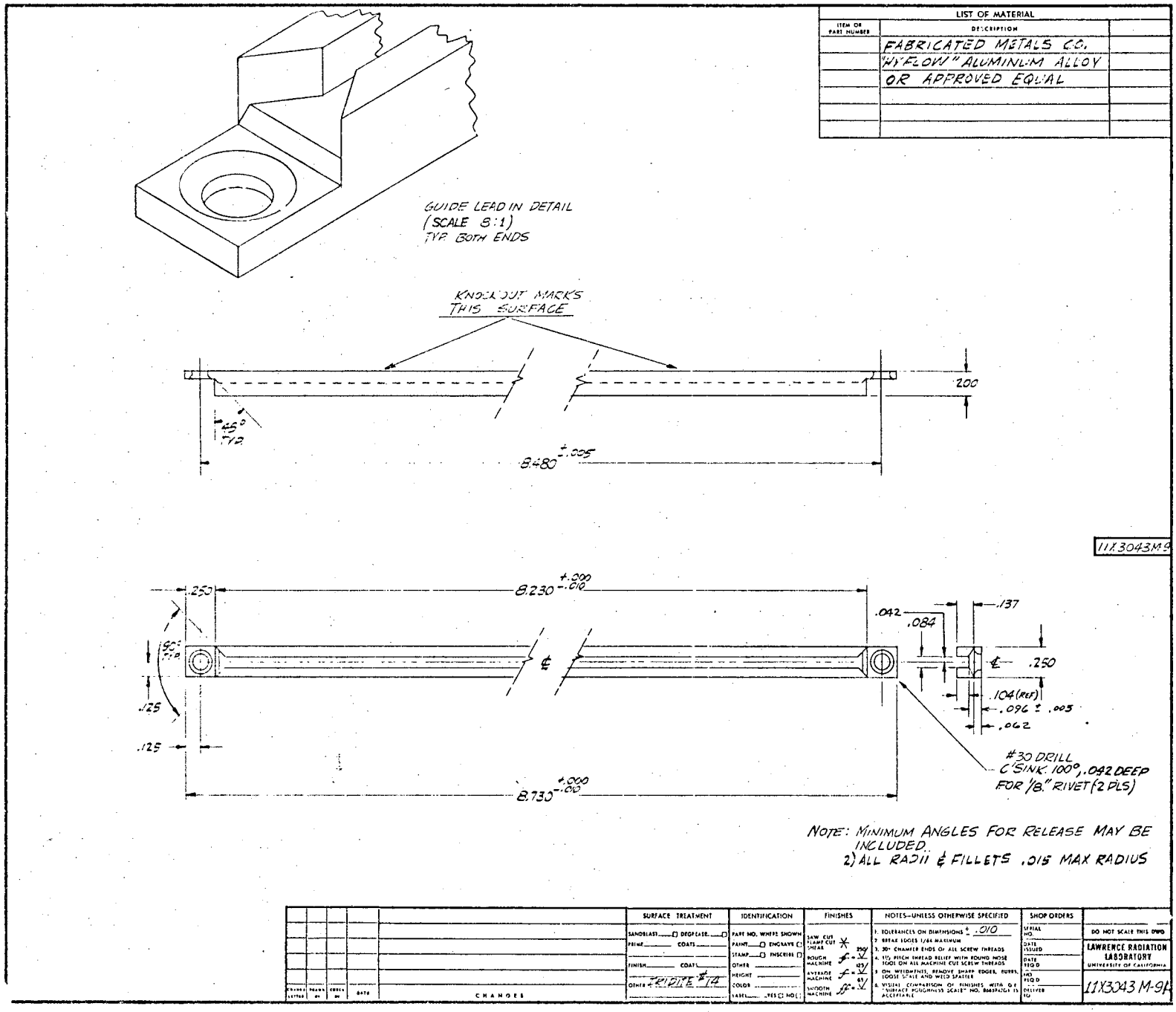
LIST OF MATERIAL
ITEM OR PART NUMBER
DESCRIPTION
FABRICATED METALS C.O.
"HYFLOW" ALUMINUM ALLOY
OR APPROVED EQUAL
GUIDE LEAD IN DETAIL
(SCALE 8:1)
TYP. BOTH ENDS
KNOCKOUT MARKS THIS SURFACE
.200
45° TYP
8.480 ±.005
11X3043M-9
.250
8.230 +.000 -.010
90° TYP
.125
.125
8.730 +.000 -.010
.042
.084
.137
.250
.104 (REF)
.096 ± .005
.062
#30 DRILL
C'SINK 100°, .042 DEEP
FOR 1/8" RIVET (2 PLS)
NOTE: MINIMUM ANGLES FOR RELEASE MAY BE INCLUDED.
2) ALL RADII & FILLETS .015 MAX RADIUS
SURFACE TREATMENT
IDENTIFICATION
FINISHES
NOTES—UNLESS OTHERWISE SPECIFIED
SHOP ORDERS
CHANGES
DO NOT SCALE THIS DWG
LAWRENCE RADIATION LABORATORY
UNIVERSITY OF CALIFORNIA
11X3043 M-9
STD. NUCLEAR INSTRUMENTATION BIN
MODULE GUIDE (24 PER UNIT)
TOP & BOTTOM

Fig. 31

Change Letter	Drawn By	Check By	Date	CHANGES	MATERIAL ALUMINUM 6063-T5	11X3321M-1A

NOTES:

1) FLATNESS - .004/IN
2) STRAIGHTNESS - .0125/FT.
3) TWIST - 1/2°/FT.
4) ANGULARITY ± 1°
5) CORNER & FILLET RADII .015 IN
6) SURFACE ROUGHNESS .002 IN, MAX

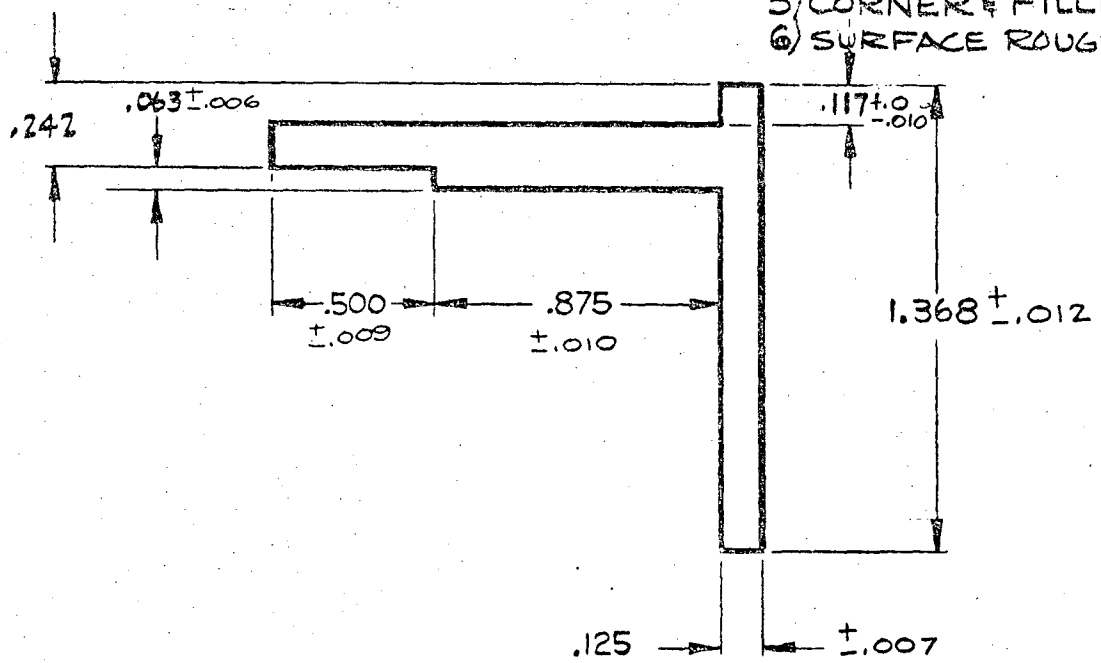

SURFACE TREATMENT	IDENTIFICATION	FINISHES	NOTES—UNLESS OTHERWISE SPECIFIED	SHOP ORDERS	
SANDBLAST ☐ DEGREASE ☐	PART NO. WHERE SHOWN	SAW CUT FLAME CUT SHEAR	1. TOLERANCES ON DIMENSIONS ±.006	SERIAL NO.	DO NOT SCALE THIS DWG.
PRIME COATS	PAINT ☐ ENGRAVE ☐	ROUGH MACHINE 250	2. BREAK EDGES 1/64 MAXIMUM	DATE ISSUED	RADIATION LABORATORY UNIVERSITY OF CALIFORNIA
FINISH COATS	STAMP ☐ INSCRIBE ☐	AVERAGE MACHINE 125	3. 30° CHAMFER ENDS OF ALL SCREW THREADS	DATE REQ'D	
OTHER	OTHER	SMOOTH MACHINE 63	4. 1½ PITCH THREAD RELIEF WITH ROUND NOSE TOOL ON ALL MACHINE CUT SCREW THREADS	NO. REQ'D	11X3321M-1A
	HEIGHT		5. ON WELDMENTS, REMOVE SHARP EDGES, BURRS, LOOSE SCALE AND WELD SPATTER	DELIVER TO	
	COLOR		6. VISUAL COMPARISON OF FINISHES WITH G.E. "SURFACE ROUGHNESS SCALE" NO. 8665947G1 IS ACCEPTABLE.		
	LABEL YES ☐ NO ☐				

RL-330 (Size 1)

SHOWN ON	DESIGN ACCOUNT NO. 4271-04	DATE 8-12 64
	DRAWN BY CROW	
		CHECKED BY D

ALUMINUM EXTRUSION FOR FRONT FRAME BRACES ON STD. 8¾" OR 5¼"

NUCLEAR INSTRUMENTATION BIN

Fig. 32

Change Letter	Drawn By	Check By	Date	CHANGES	MATERIAL ALUMINUM 6063-T5	11X3321M-2A

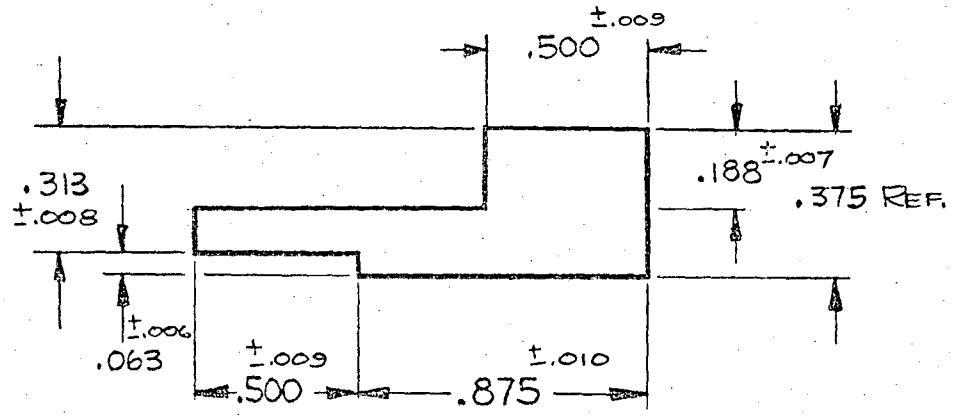

NOTE:
1) FLATNESS – .004/IN
2) STRAIGHTNESS – .0125/FT.
3) TWIST – 1/2°/FT.
4) ANGULARITY – ± 1°
5) CORNER & FILLET RADII .015 IN
6) SURFACE ROUGHNESS .002 IN MAX.

SURFACE TREATMENT	IDENTIFICATION	FINISHES	NOTES—UNLESS OTHERWISE SPECIFIED	SHOP ORDERS	
SANDBLAST ☐ DEGREASE ☐	PART NO. WHERE SHOWN	SAW CUT FLAMECUT SHEAR	1. TOLERANCES ON DIMENSIONS ±.006	SERIAL NO.	DO NOT SCALE THIS DWG.
PRIME COATS	PAINT ☐ ENGRAVE ☐	ROUGH MACHINE 250	2. BREAK EDGES 1/64 MAXIMUM	DATE ISSUED	RADIATION LABORATORY UNIVERSITY OF CALIFORNIA
FINISH COATS	STAMP ☐ INSCRIBE ☐	AVERAGE MACHINE 125	3. 30° CHAMFER ENDS OF ALL SCREW THREADS	DATE REQ'D	
OTHER	OTHER	SMOOTH MACHINE 63	4. 1½ PITCH THREAD RELIEF WITH ROUND NOSE TOOL ON ALL MACHINE CUT SCREW THREADS	NO. REQ'D	11X3321M-2 A
	HEIGHT		5. ON WELDMENTS, REMOVE SHARP EDGES, BURRS, LOOSE SCALE AND WELD SPATTER	DELIVER TO	
	COLOR		6. VISUAL COMPARISON OF FINISHES WITH G.E. "SURFACE ROUGHNESS SCALE" NO. 8665947G1 IS ACCEPTABLE.		
	LABEL YES ☐ NO ☐				

RL-330 (Size 1)

SHOWN ON	DESIGN ACCOUNT NO. 4271-04	DRAWN BY CRAV	DATE 8-11 64
ALUMINUM EXTRUSION FOR REAR FRAME BRACES ON STD. 8¾" OR 5¼" NUCLEAR INSTRUMENTATION BIN		CHECKED BY D	

Fig. 33

Change Letter	Drawn By	Check By	Date	CHANGES	MATERIAL ALUMINUM 6063-T5	11X3321M-3A

NOTES:
1) FLATNESS - .004/IN
2) STRAIGHTNESS - .0125/FT.
3) TWIST - 1/2°/FT.
4) ANGULARITY - ± 1°
5) CORNER & FILLET RAD 1.015 IN
6) SURFACE ROUGHNESS .002 IN MAX

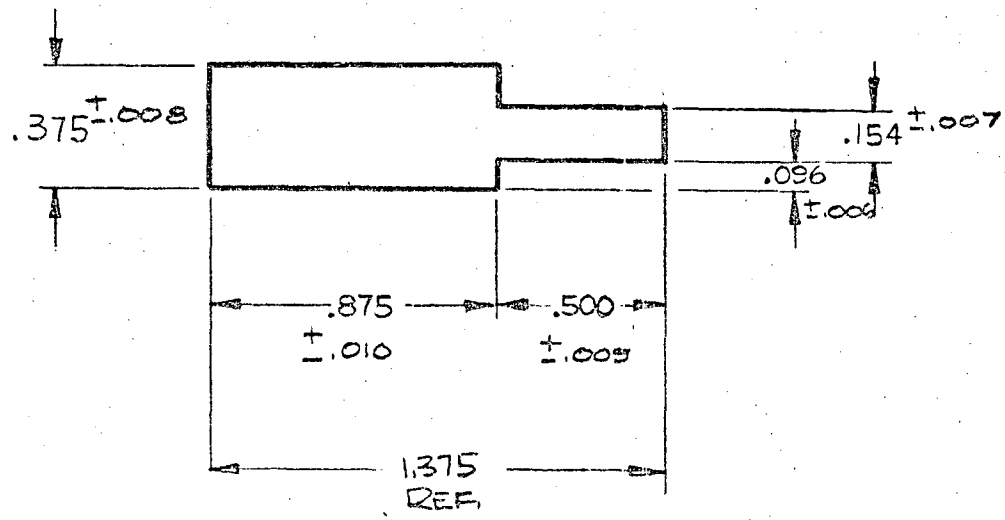

SURFACE TREATMENT	IDENTIFICATION	FINISHES	NOTES—UNLESS OTHERWISE SPECIFIED	SHOP ORDERS	
SANDBLAST ☐ DEGREASE ☐	PART NO. WHERE SHOWN	SAW CUT FLAME CUT SHEAR	1. TOLERANCES ON DIMENSIONS ±.006	SERIAL NO.	DO NOT SCALE THIS DWG.
PRIME COATS	PAINT ☐ ENGRAVE ☐	ROUGH MACHINE 250	2. BREAK EDGES 1/64 MAXIMUM	DATE ISSUED	RADIATION LABORATORY UNIVERSITY OF CALIFORNIA
FINISH COATS	STAMP ☐ INSCRIBE ☐	AVERAGE MACHINE 125	3. 30° CHAMFER ENDS OF ALL SCREW THREADS	DATE REQ'D	
OTHER	OTHER	SMOOTH MACHINE 63	4. 1½ PITCH THREAD RELIEF WITH ROUND NOSE TOOL ON ALL MACHINE CUT SCREW THREADS	NO. REQ'D	11X3321M-3 A
	HEIGHT		5. ON WELDMENTS, REMOVE SHARP EDGES, BURRS, LOOSE SCALE AND WELD SPATTER	DELIVER TO	
	COLOR		6. VISUAL COMPARISON OF FINISHES WITH G.E. "SURFACE ROUGHNESS SCALE" NO. 8665947G1 IS ACCEPTABLE.		
	LABEL YES ☐ NO ☐				

RL-330 (Size 1)

SHOWN ON	DESIGN ACCOUNT NO. 4271-04	DRAWN BY CROW	DATE 8-11-64
		CHECKED BY	

ALUMINUM EXTRUSION FOR FRONT AND REAR MAIN FRAME BRACES ON STD. $8\frac{3}{4}$" $\times 5\frac{1}{4}$" NUCLEAR INSTRUMENTATION BIN

Fig. 34

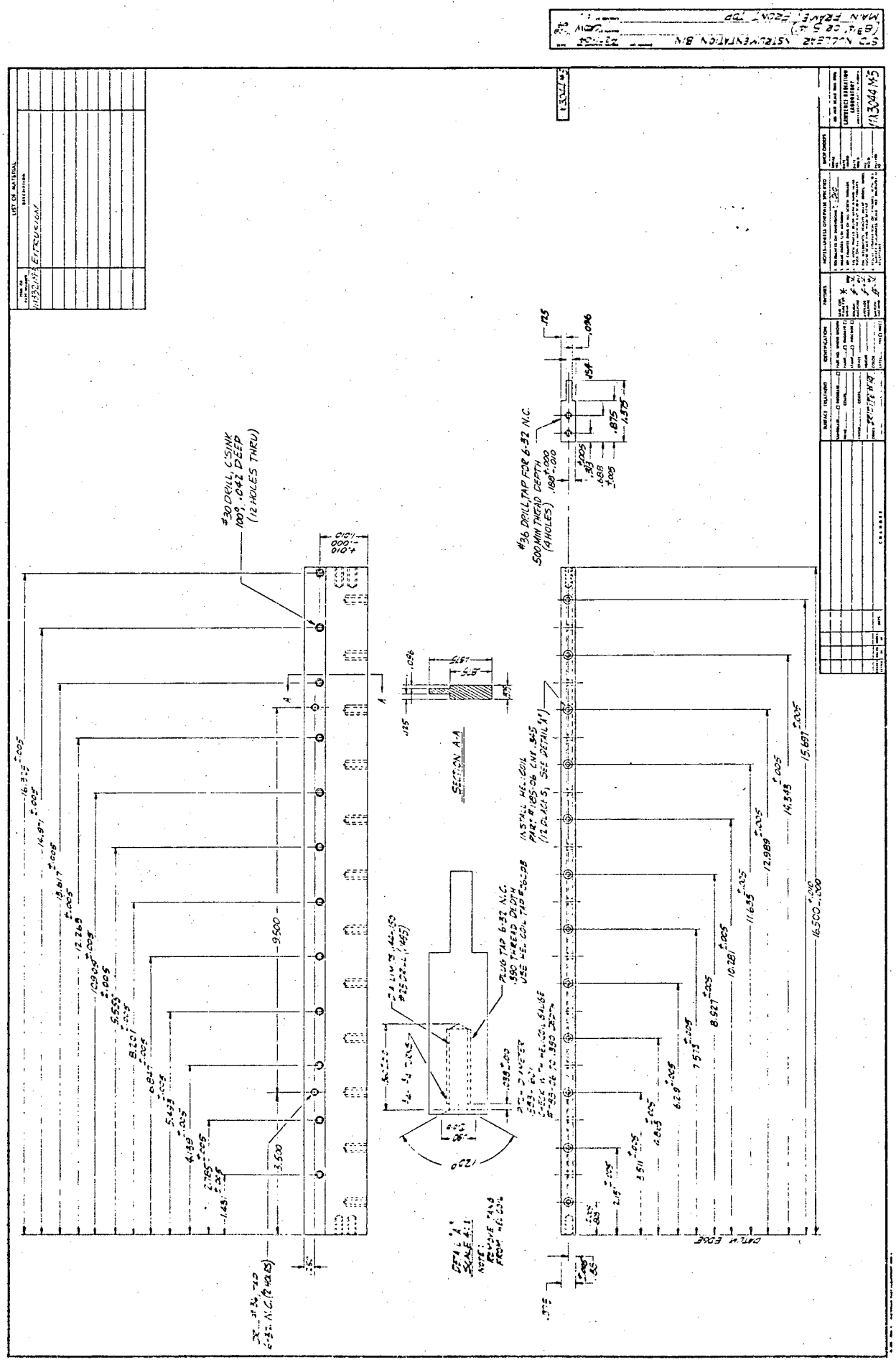
#30 DRILL, C'SINK
.1009, .042 DEEP
(12 HOLES THRU)
#36 DRILL, TAP FOR 6-32 N.C.
500 MIN THREAD DEPTH
(4 HOLES)
SECTION A-A
DATUM EDGE

Fig. 35

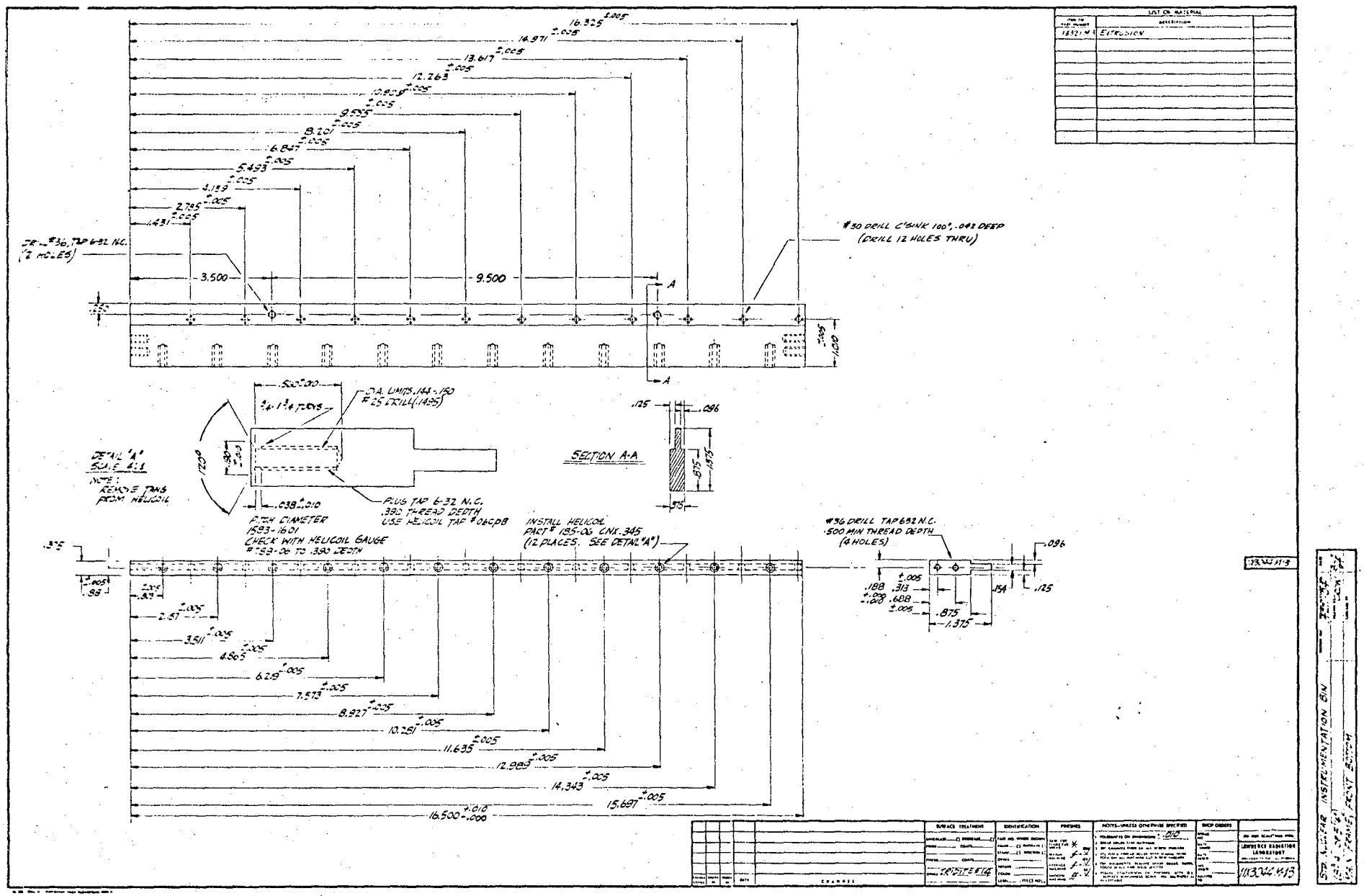

LIST OF MATERIAL
EXTRUSION
#30 DRILL C'SINK 100°, .042 DEEP
(DRILL 12 HOLES THRU)
3.500
9.500
SECTION A-A
DETAIL "A"
SCALE 4:1
NOTE: REMOVE TANG FROM HELICOIL
PITCH DIAMETER
1583-1601
CHECK WITH HELICOIL GAUGE
PLUG TAP 6-32 N.C.
.390 THREAD DEPTH
USE HELICOIL TAP #06CPB
INSTALL HELICOIL
PART # 185-06 CNX.345
(12 PLACES. SEE DETAIL "A")
#36 DRILL TAP 632 N.C.
.500 MIN THREAD DEPTH
(4 HOLES)
16.500 +.010 -.000
LAWRENCE RADIATION LABORATORY

Fig. 36

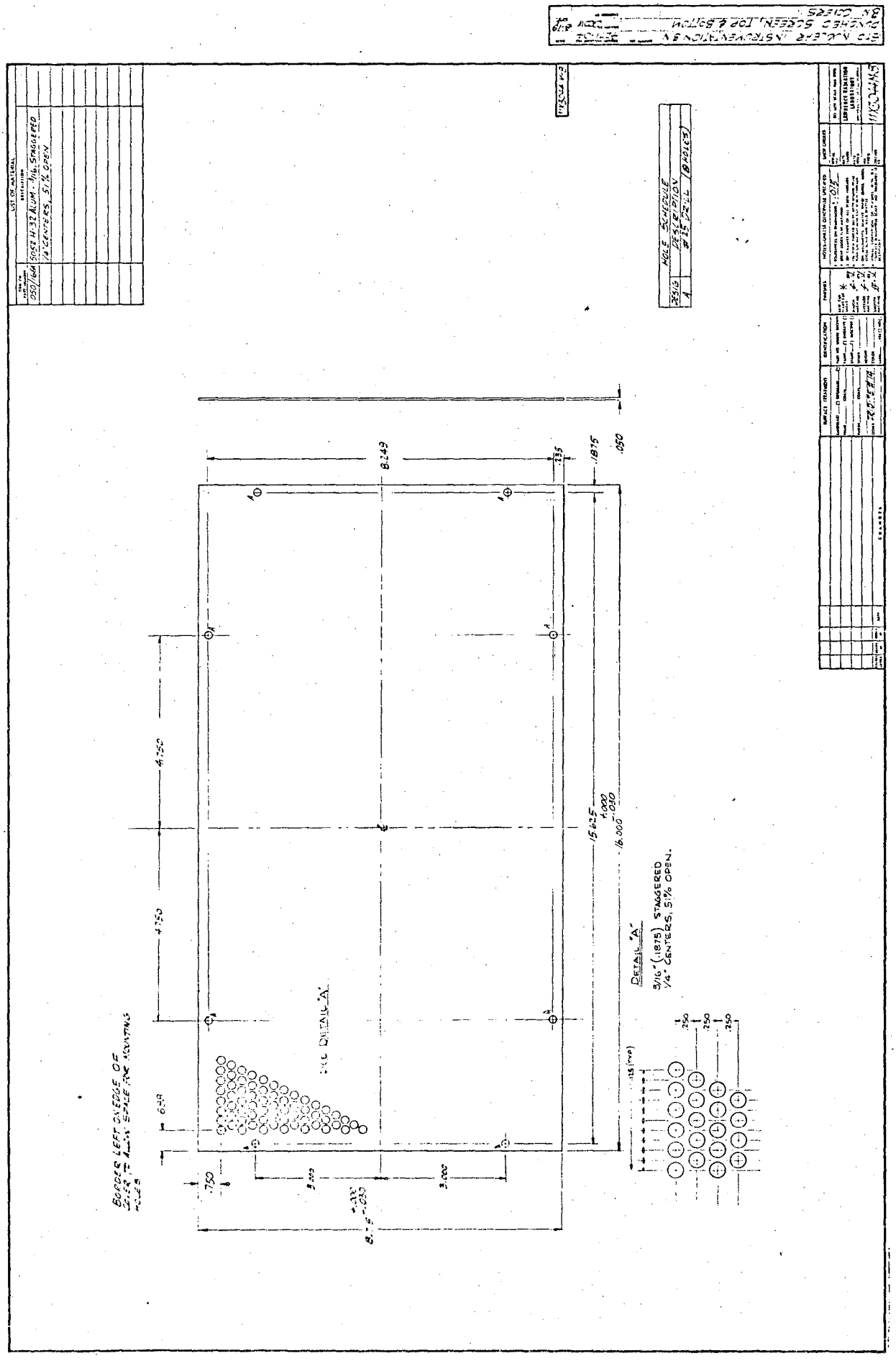
HOLE SCHEDULE
DESIG
DESCRIPTION
A
#25 DRILL (8 HOLES)
DETAIL "A"
3/16" (.1875) STAGGERED
1/4" CENTERS, 51% OPEN.
BORDER LEFT ON EDGE OF
COVER TO ALLOW SPACE FOR MOUNTING
HOLES
8.249
.1875
.050
4.750
4.750
15.625
16.000
.750
3.000
3.000
.250
.250
.250

Fig. 37

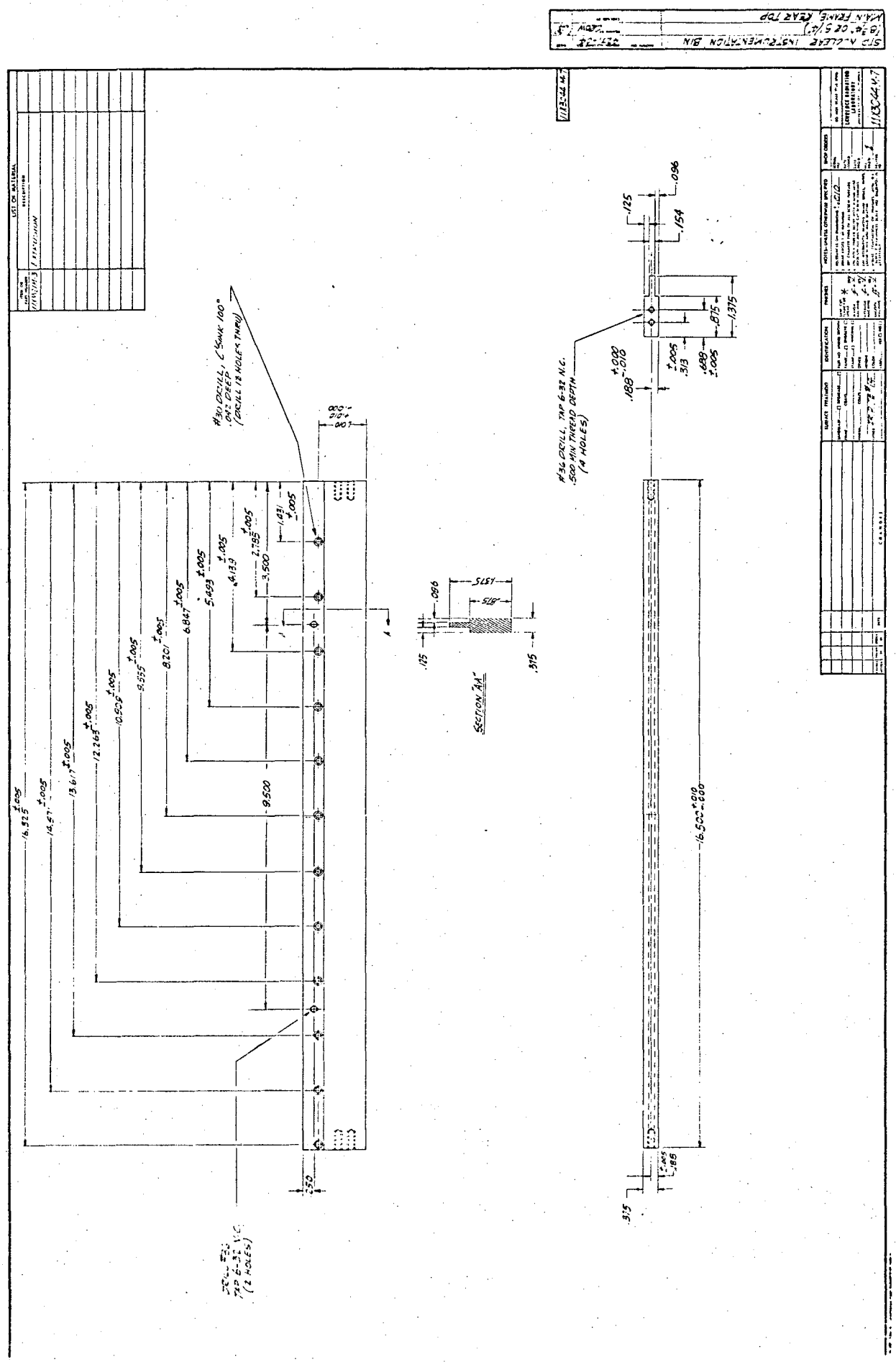
SECTION "AA"
#30 DRILL, C'SINK 100° .042 DEEP (DRILL 18 HOLES THRU)
#36 DRILL, TAP 6-32 N.C. .500 MIN THREAD DEPTH (4 HOLES)
16.500 +.010 -.000
16.325 ±.005
14.571 ±.005
13.617 ±.005
12.263 ±.005
10.909 ±.005
9.555 ±.005
8.201 ±.005
6.847 ±.005
5.493 ±.005
4.139 ±.005
2.785 ±.005
1.431 ±.005
3.500
9.500
.125
.154
.096
.875
1.375
.313
.688 ±.005
.188 +.000 -.010
.250
.375
.188

Fig. 38

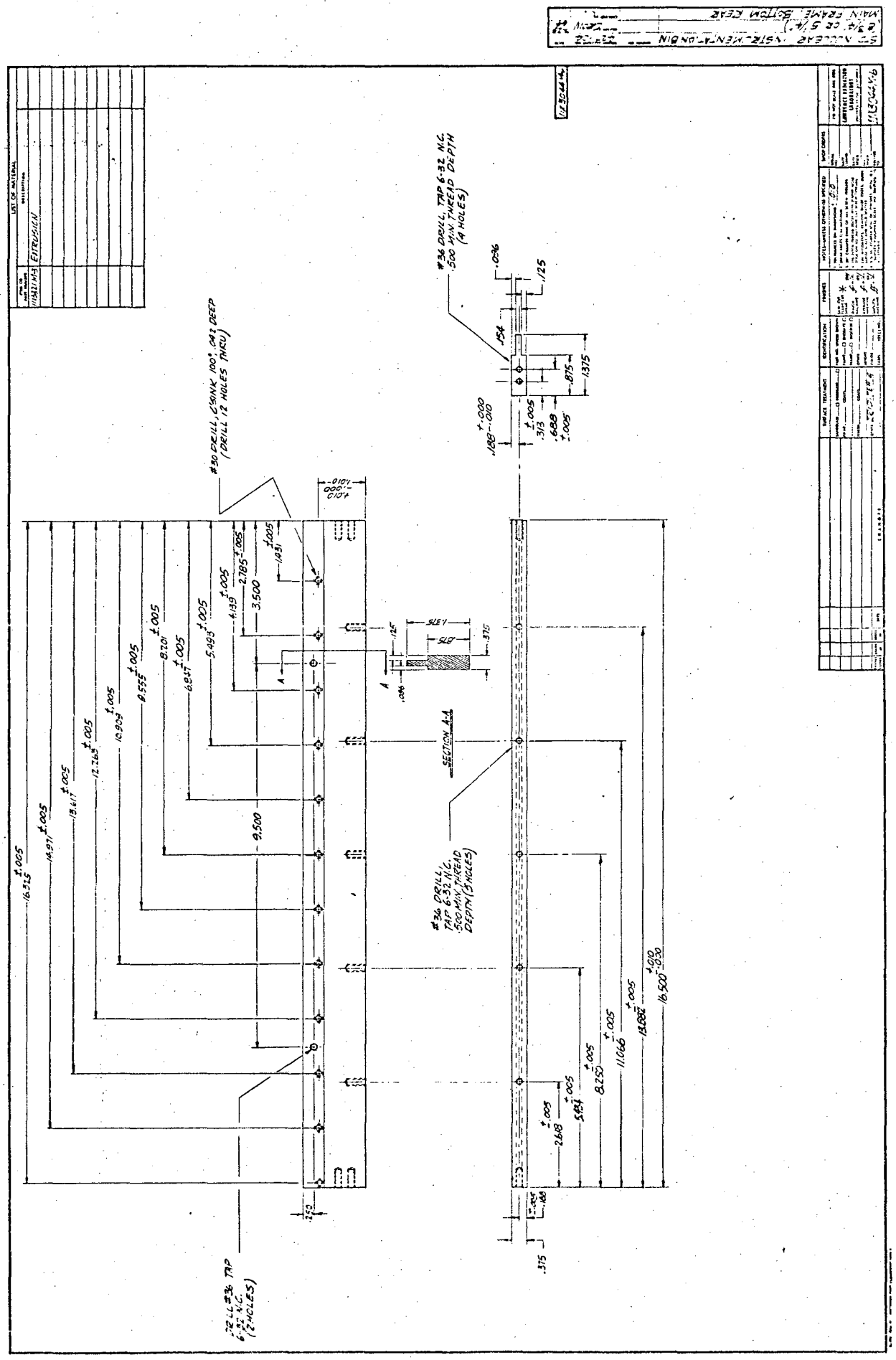
MAIN FRAME, BOTTOM REAR
#36 DRILL, TAP 6-32 N.C. .500 MIN. THREAD DEPTH (4 HOLES)
#30 DRILL, C'SINK 100°, .042 DEEP (DRILL 12 HOLES THRU)
SECTION A-A
#36 DRILL, TAP 6-32 N.C. .500 MIN. THREAD DEPTH (5 HOLES)
DRILL #36 TAP 6-32 N.C. (2 HOLES)
EXTRUSION

Fig. 39

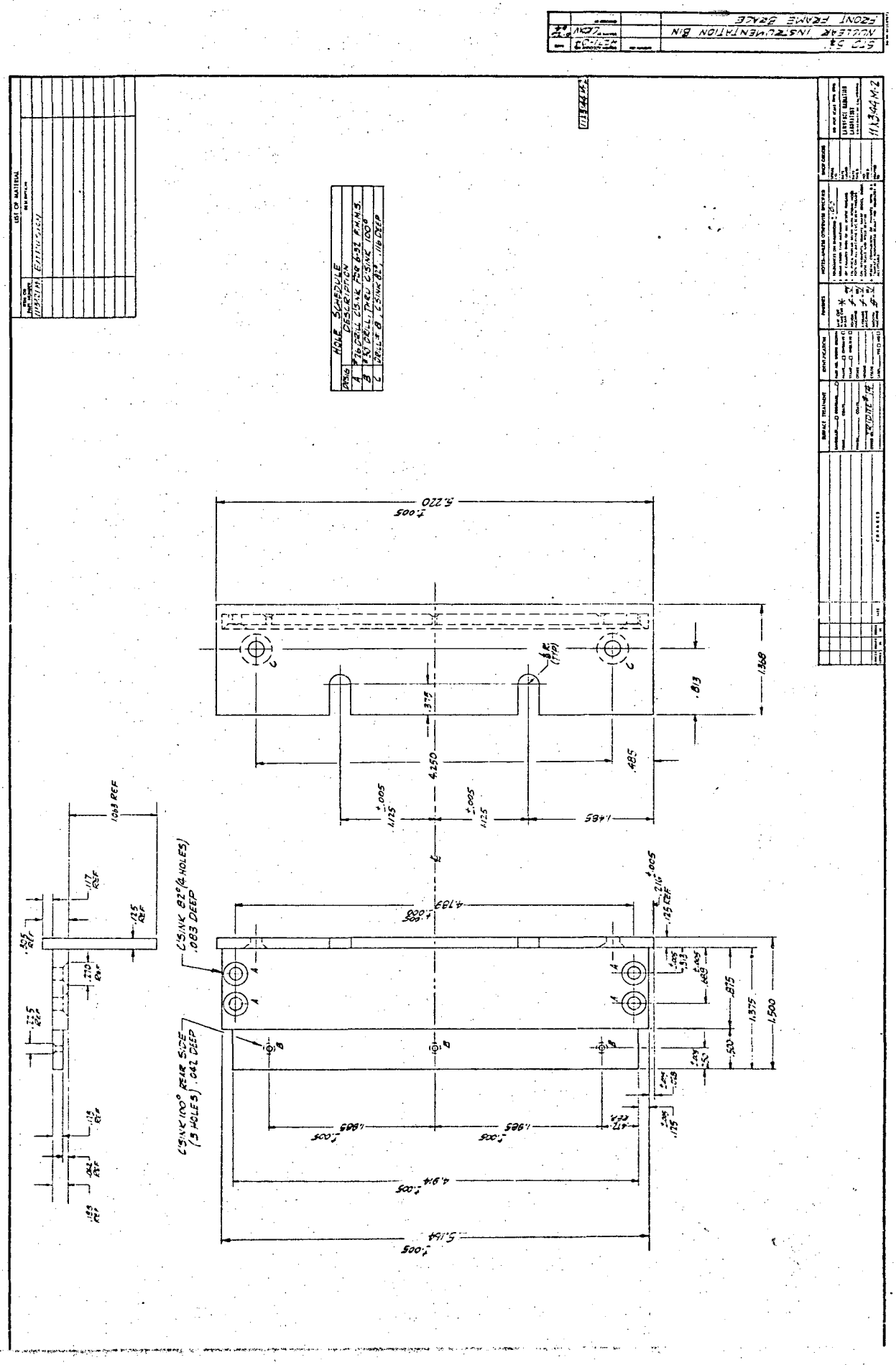
NUCLEAR INSTRUMENTATION BIN
FRONT FRAME BRACE
HOLE SCHEDULE
DESCRIPTION
LIST OF MATERIAL
5.220
4.250
4.789
4.914
5.164
1.368
.813
.485
1.485
1.500
1.375
.875
.500
C'SINK 82° (4 HOLES) .083 DEEP
C'SINK 100° REAR SIDE (3 HOLES) .042 DEEP
1.063 REF
.125 REF
.117 REF
.270 REF
.305 REF
.225 REF
.118 REF
.042 REF
.183 REF
11X344M-2

Fig. 40

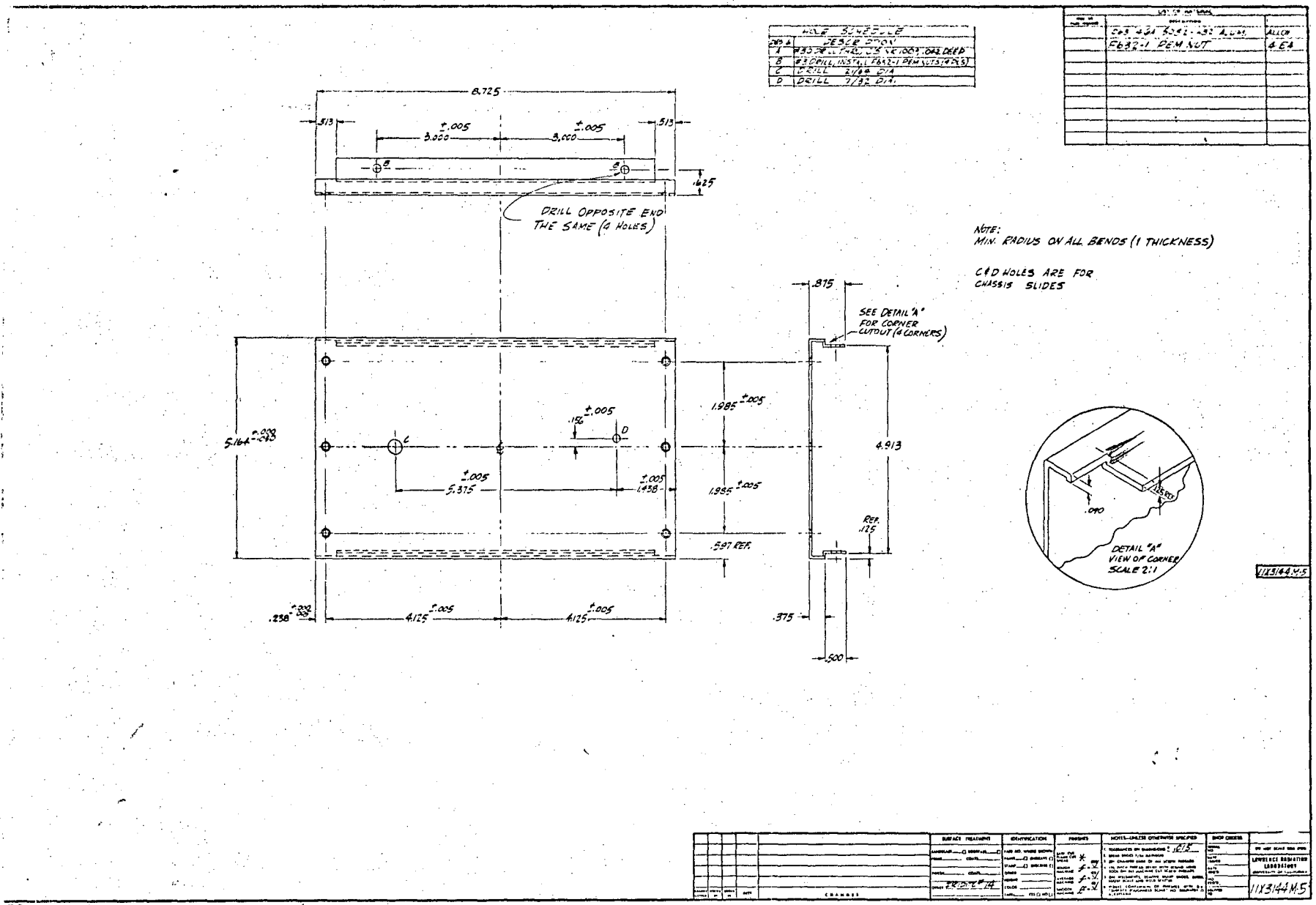
HOLE SCHEDULE
DESCRIPTION
A #30 DRILL THRU, C'S NR 1003, .042 DEEP
B #3 DRILL, INSTALL F632-1 PEM NUTS (4 PLS)
C DRILL 21/64 DIA
D DRILL 7/32 DIA
F632-1 PEM NUT
4 EA
8.725
.513
3.000 ±.005
3.000 ±.005
.625
DRILL OPPOSITE END THE SAME (4 HOLES)
NOTE:
MIN. RADIUS ON ALL BENDS (1 THICKNESS)
C & D HOLES ARE FOR CHASSIS SLIDES
.875
SEE DETAIL "A" FOR CORNER CUTOUT (4 CORNERS)
1.985 ±.005
4.913
5.164
.156 ±.005
5.375 ±.005
1.438 ±.005
1.985 ±.005
.597 REF.
REF. .125
.238
4.125 ±.005
4.125 ±.005
.375
.500
.090
DETAIL "A" VIEW OF CORNER SCALE 2:1
11X3144 M-5
STA 5/4" ALCLEAR INSTRUMENTATION BIN SIDE COVERS (RIGHT SIDE)
LAWRENCE RADIATION LABORATORY
11X3144 M-5

Fig. 41

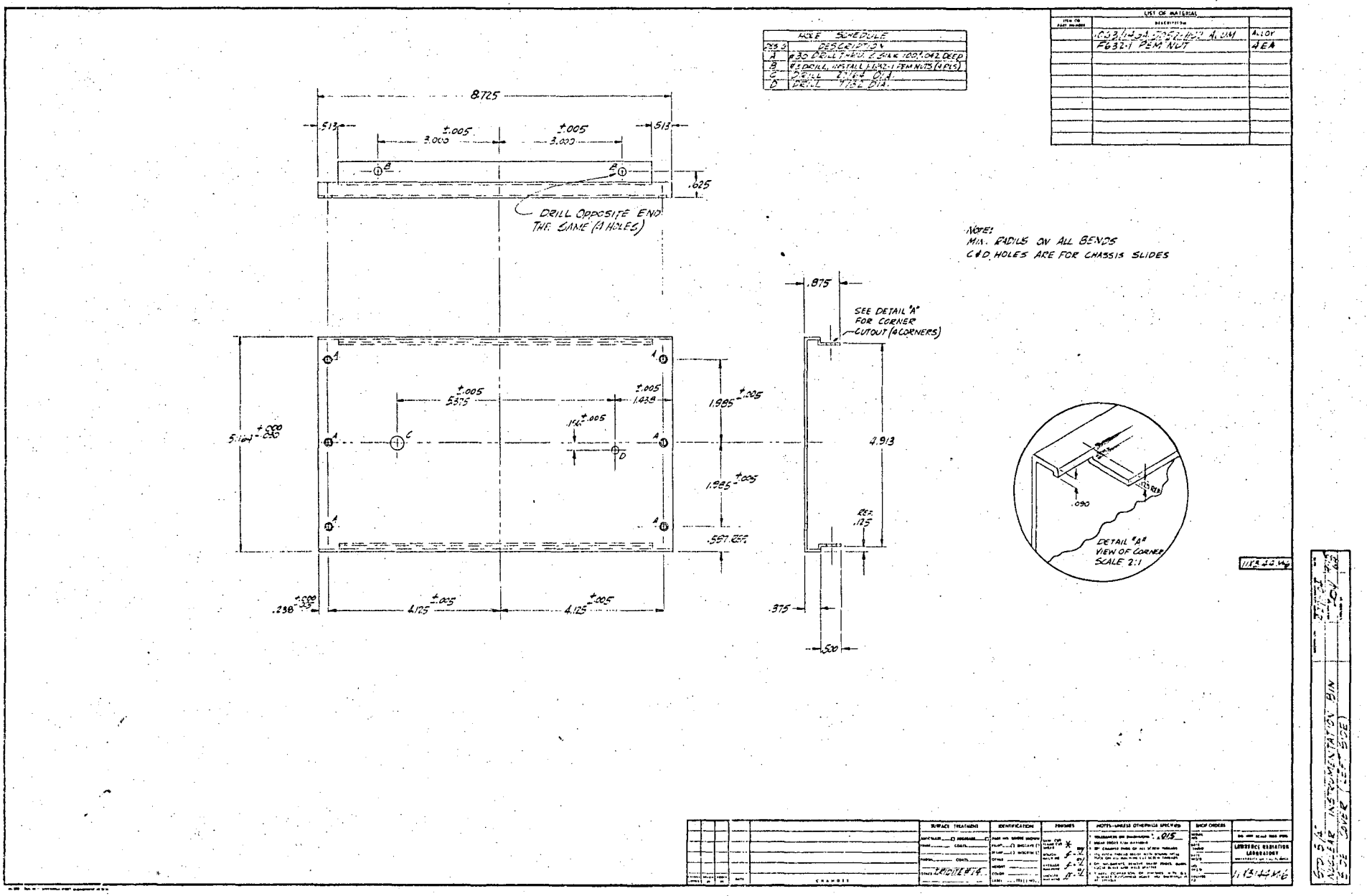
HOLE SCHEDULE
DESCRIPTION
DRILL OPPOSITE END THE SAME (4 HOLES)
NOTE:
MIN. RADIUS ON ALL BENDS
C&D HOLES ARE FOR CHASSIS SLIDES
SEE DETAIL "A" FOR CORNER CUTOUT (4 CORNERS)
DETAIL "A" VIEW OF CORNER SCALE 2:1
LIST OF MATERIAL
F632-1 PEM NUT
ALLOY
4EA
8.725
.513
3.000
.625
5.375
1.438
1.985
4.913
.875
.500
.375
4.125
.597 REF.
LAWRENCE RADIATION LABORATORY
NUCLEAR INSTRUMENTATION BIN
SIDE COVER (LEFT SIDE)

Fig. 42

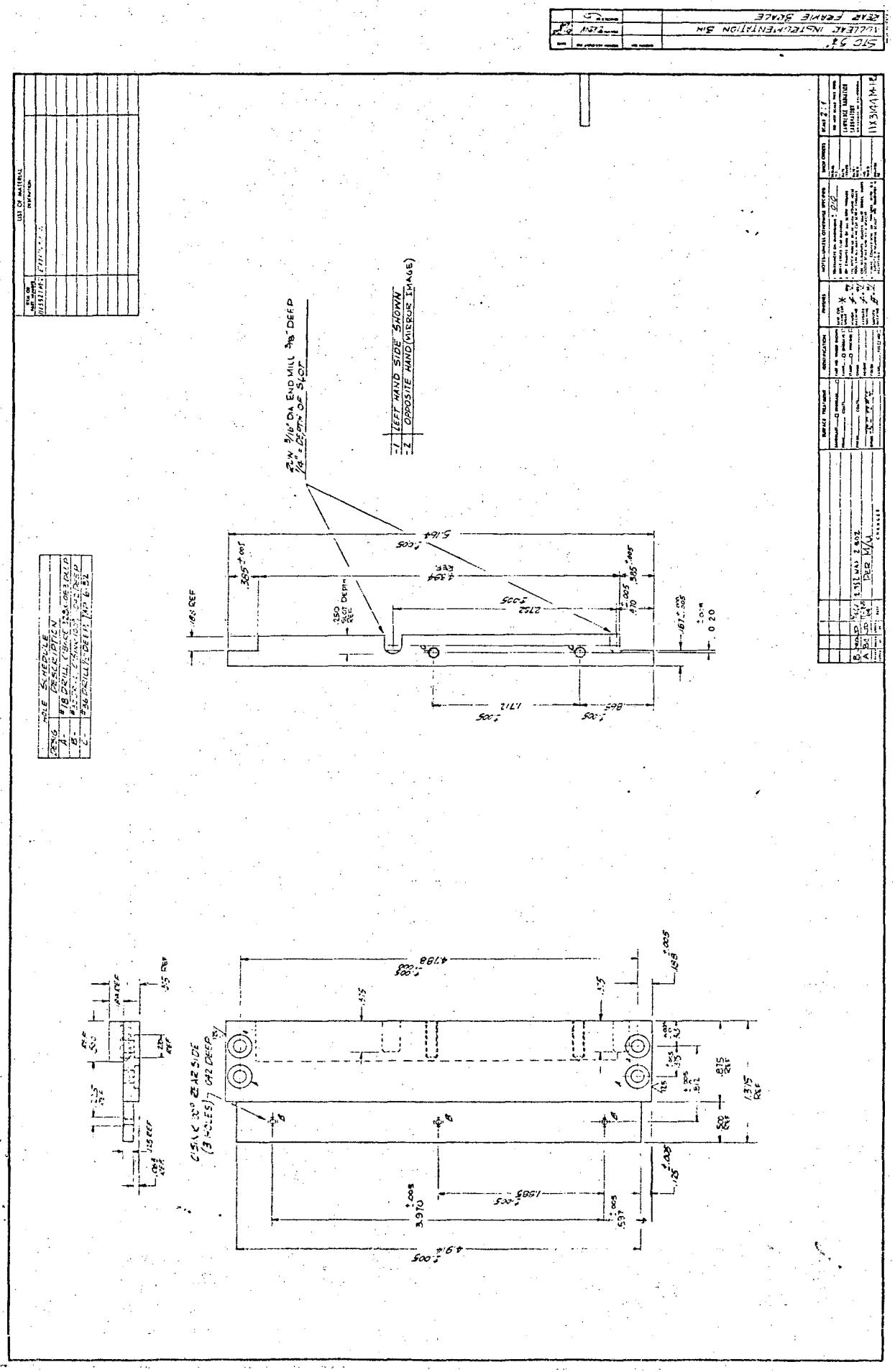
STC 54
NUCLEAR INSTRUMENTATION BIN
REAR FRAME BRACE
LEFT HAND SIDE SHOWN
OPPOSITE HAND (MIRROR IMAGE)
HOLE SCHEDULE
DESCRIPTION
LIST OF MATERIAL

Fig. 43

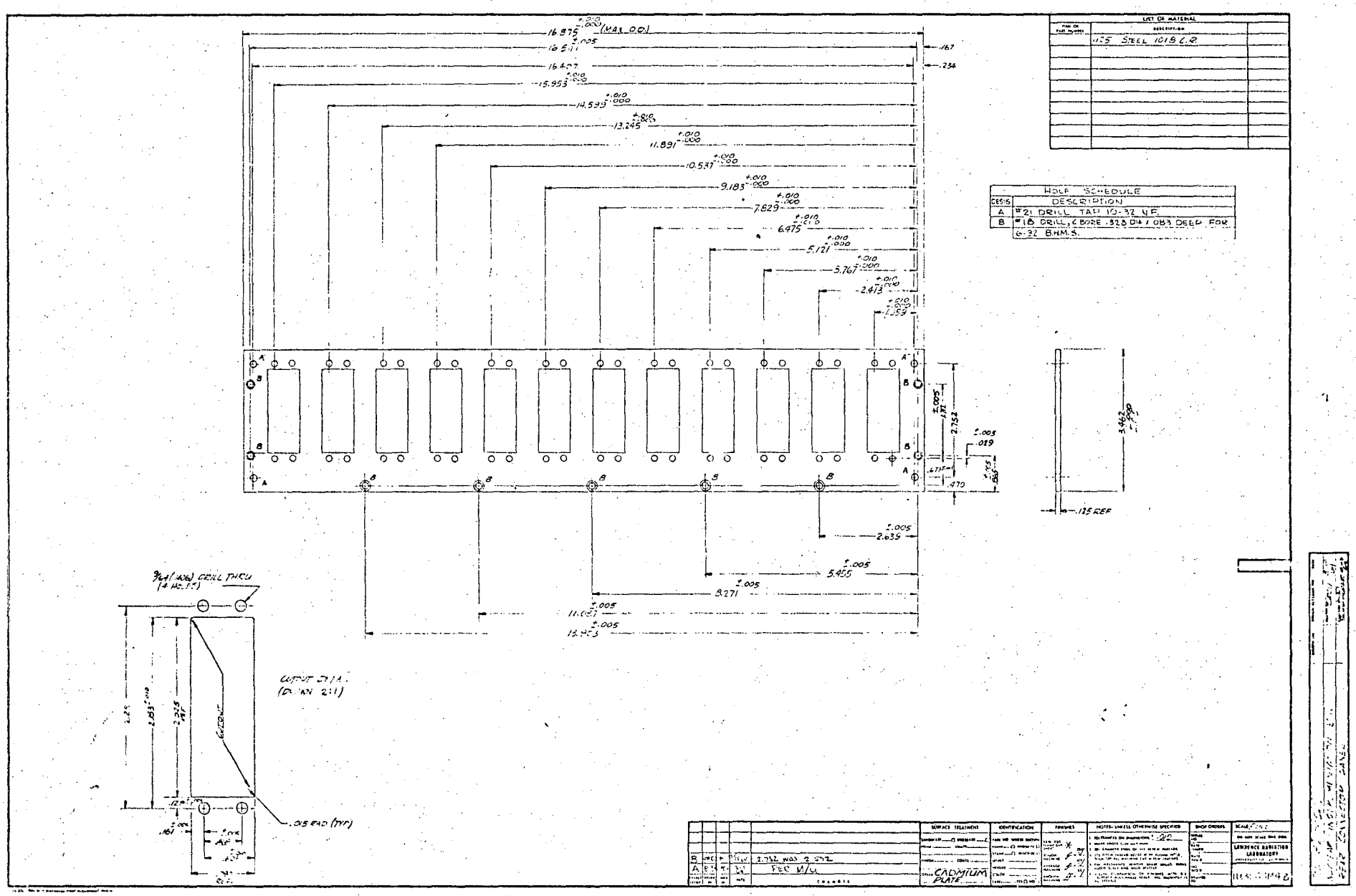
LIST OF MATERIAL
HOLE SCHEDULE
DESIGN
DESCRIPTION
A #21 DRILL TAP 10-32 N.F.
B #18 DRILL, C BORE .328 DIA / .083 DEEP FOR 6-32 B.H.M.S.
CADMIUM PLATE
LAWRENCE RADIATION LABORATORY

Fig. 44

Group IV of illustrations

Construction drawings for 8-3/4-inch instrumentation module

Page number	Figure number	LRL Drawing number	Title	Number required Size 1	Size 2	Size 3
53	45	11X3053 A-1	Overall assembly	-	-	-
54	46	11X3053 M-5	Side covers	-	-	-
55	47	11X3052 M-3	Front panel #1	1		
56	48	11X3052 M-2	Rear panel#1	1		
57	49	11X3052 M-7	Front panel#2		1	
58	50	11X3052 M-6	Rear panel#2		1	
59	51	11X3053 M-9	Front panel#3			1
60	52	11X3053 M-10	Rear panel#3			1
also 21	15	11X3321 M-5A	Aluminum extrusion sectional	-	-	-
22	16	11X3052 M-1	Extruded corner	4	4	4
24	18	11X3053 M-4	Screen covers (top and bottom)#1	2		
25	19	11X3053 M-8	Screen covers (top and bottom)#2		2	
26	20	11X3053 M-11	Screen covers (top and bottom)#3			2
27	21	11X3053 M-13	Side cover fastener bracket	1	1	1

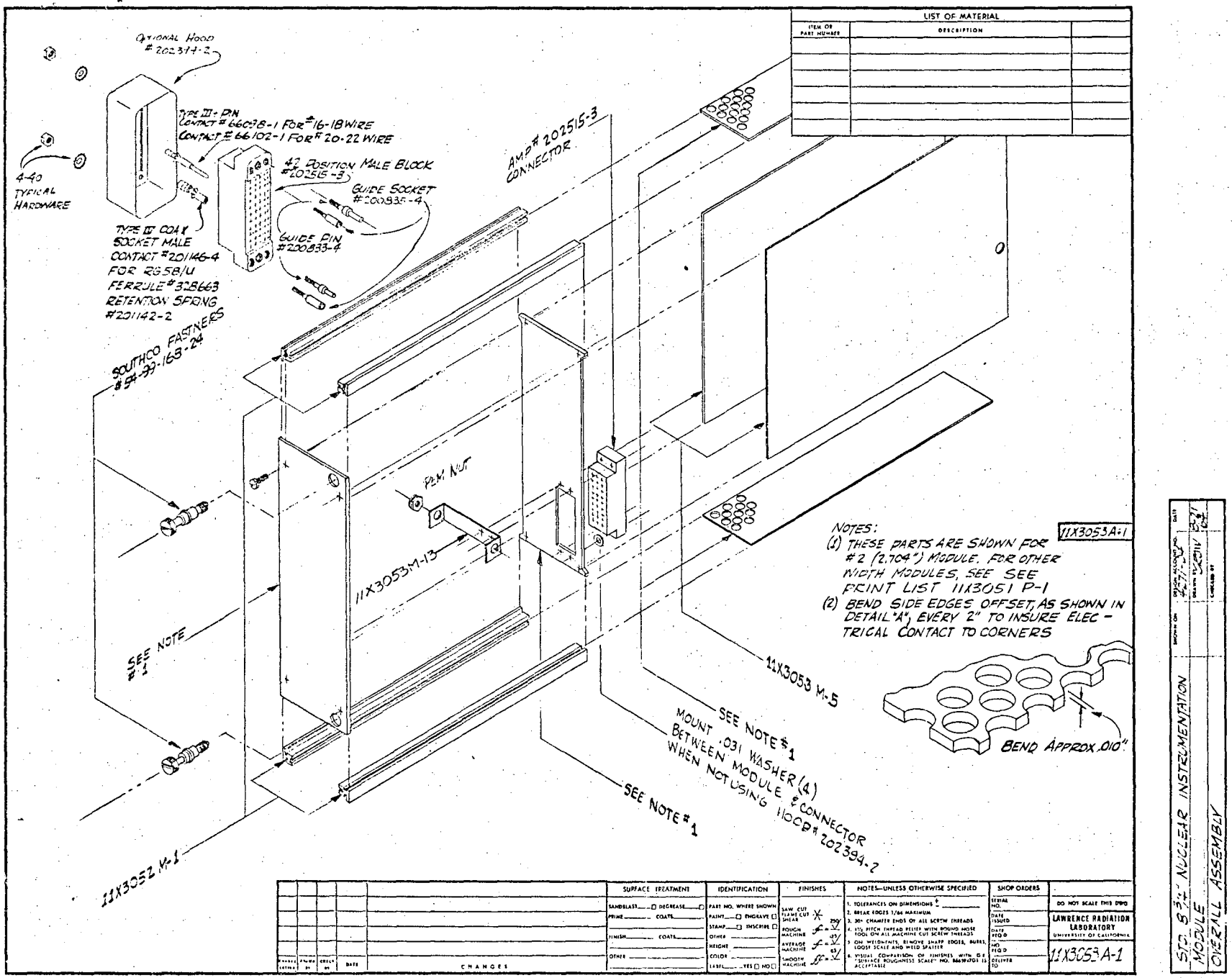
LIST OF MATERIAL
ITEM OR PART NUMBER
DESCRIPTION
OPTIONAL HOOD #202314-2
TYPE III - PIN CONTACT #66038-1 FOR #16-18 WIRE
CONTACT #66102-1 FOR #20-22 WIRE
42 POSITION MALE BLOCK #202515-3
GUIDE SOCKET #200835-4
GUIDE PIN #200833-4
4-40 TYPICAL HARDWARE
TYPE III COAX SOCKET MALE CONTACT #201146-4 FOR RG58/U FERRULE #328663 RETENTION SPRING #201142-2
SOUTHCO FASTNERS #54-99-168-24
AMP # 202515-3 CONNECTOR
PEM NUT
11X3053M-13
SEE NOTE #1
11X3052 M-1
SEE NOTE #1
MOUNT .031 WASHER (4) BETWEEN MODULE & CONNECTOR WHEN NOT USING HOOD # 202394-2
SEE NOTE #1
11X3053 M-5
11X3053A-1
NOTES:
(1) THESE PARTS ARE SHOWN FOR #2 (2.704") MODULE. FOR OTHER WIDTH MODULES, SEE SEE PRINT LIST 11X3051 P-1
(2) BEND SIDE EDGES OFFSET, AS SHOWN IN DETAIL "A", EVERY 2" TO INSURE ELECTRICAL CONTACT TO CORNERS
BEND APPROX .010"
SURFACE TREATMENT
IDENTIFICATION
FINISHES
NOTES—UNLESS OTHERWISE SPECIFIED
SHOP ORDERS
DO NOT SCALE THIS DWG
LAWRENCE RADIATION LABORATORY
UNIVERSITY OF CALIFORNIA
11X3053A-1
CHANGES
DATE
STD 8½" NUCLEAR INSTRUMENTATION MODULE
OVERALL ASSEMBLY

Fig. 45

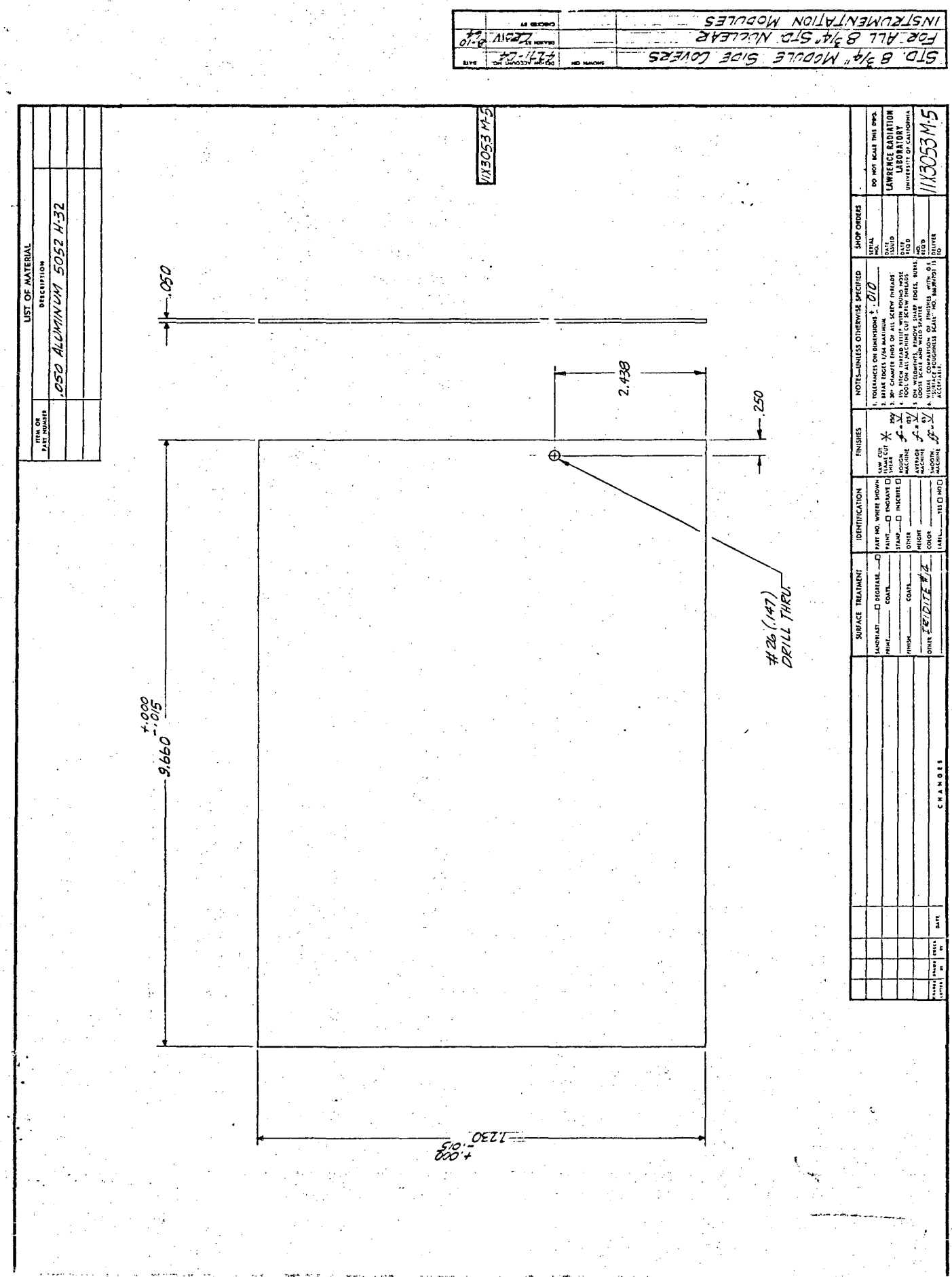
STD. 8 3/4" MODULE SIDE COVERS
FOR ALL 8 3/4" STD. NUCLEAR
INSTRUMENTATION MODULES
LIST OF MATERIAL
.050 ALUMINUM 5052 H-32
11X3053 M-5
.050
2.438
.250
#26 (.147) DRILL THRU.
9.660 +.000 -.015
1.230 +.000 -.015
LAWRENCE RADIATION LABORATORY
UNIVERSITY OF CALIFORNIA
11X3053 M-5
DO NOT SCALE THIS DWG.
SHOP ORDERS
NOTES—UNLESS OTHERWISE SPECIFIED
FINISHES
IDENTIFICATION
SURFACE TREATMENT
CHANGES

Fig. 46

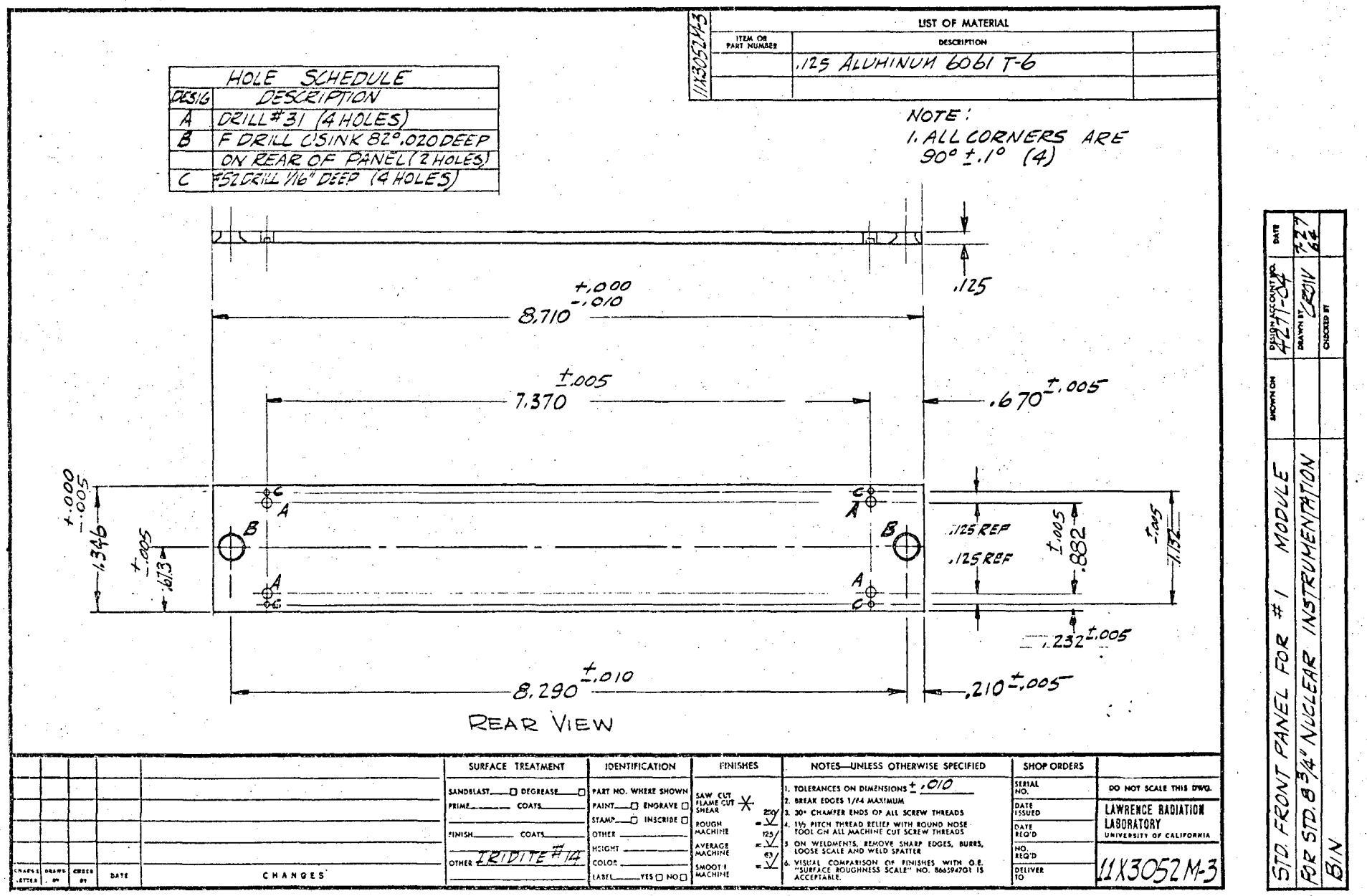
11X3052M-3
LIST OF MATERIAL
ITEM OR PART NUMBER
DESCRIPTION
.125 ALUMINUM 6061 T-6
HOLE SCHEDULE
DESIG
DESCRIPTION
A DRILL #31 (4 HOLES)
B F DRILL C'SINK 82°.020 DEEP
ON REAR OF PANEL (2 HOLES)
C #52 DRILL 1/16" DEEP (4 HOLES)
NOTE:
1. ALL CORNERS ARE 90° ±.1° (4)
.125
8.710 +.000 -.010
7.370 ±.005
.670 ±.005
1.346 +.000 -.005
.673 ±.005
.125 REF
.125 REF
.882 ±.005
1.132 ±.005
.232 ±.005
8.290 ±.010
.210 ±.005
REAR VIEW
SURFACE TREATMENT
SANDBLAST DEGREASE
PRIME COATS
FINISH COATS
OTHER IRIDITE #14
IDENTIFICATION
PART NO. WHERE SHOWN
PAINT ENGRAVE
STAMP INSCRIBE
OTHER
HEIGHT
COLOR
LABEL YES NO
FINISHES
SAW CUT FLAME CUT SHEAR
ROUGH MACHINE 250
AVERAGE MACHINE 125
SMOOTH MACHINE 63
NOTES—UNLESS OTHERWISE SPECIFIED
1. TOLERANCES ON DIMENSIONS ± .010
2. BREAK EDGES 1/64 MAXIMUM
3. 30° CHAMFER ENDS OF ALL SCREW THREADS
4. 1½ PITCH THREAD RELIEF WITH ROUND NOSE TOOL ON ALL MACHINE CUT SCREW THREADS
5. ON WELDMENTS, REMOVE SHARP EDGES, BURRS, LOOSE SCALE AND WELD SPATTER
6. VISUAL COMPARISON OF FINISHES WITH O.E. "SURFACE ROUGHNESS SCALE" NO. 8665947G1 IS ACCEPTABLE.
SHOP ORDERS
SERIAL NO.
DATE ISSUED
DATE REQ'D
NO. REQ'D
DELIVER TO
DO NOT SCALE THIS DWG.
LAWRENCE RADIATION LABORATORY
UNIVERSITY OF CALIFORNIA
11X3052M-3
CHANGE LETTER
DRAWN BY
ORDER BY
DATE
CHANGES
SHOWN ON
DESIGN ACCOUNT NO. 4271-04
DATE 7-27-64
DRAWN BY
CHECKED BY
STD. FRONT PANEL FOR #1 MODULE
FOR STD. 8 3/4" NUCLEAR INSTRUMENTATION
BIN

Fig. 47

HOLE SCHEDULE	
DESIG.	DESCRIPTION
A	DRILL #31, 4 HOLES
B	DRILL #30 DIA. 4 HOLES

LIST OF MATERIAL		
ITEM OR PART NUMBER	DESCRIPTION	
	.125 ALUMINUM 6061 T-6	

11X3052 M-2

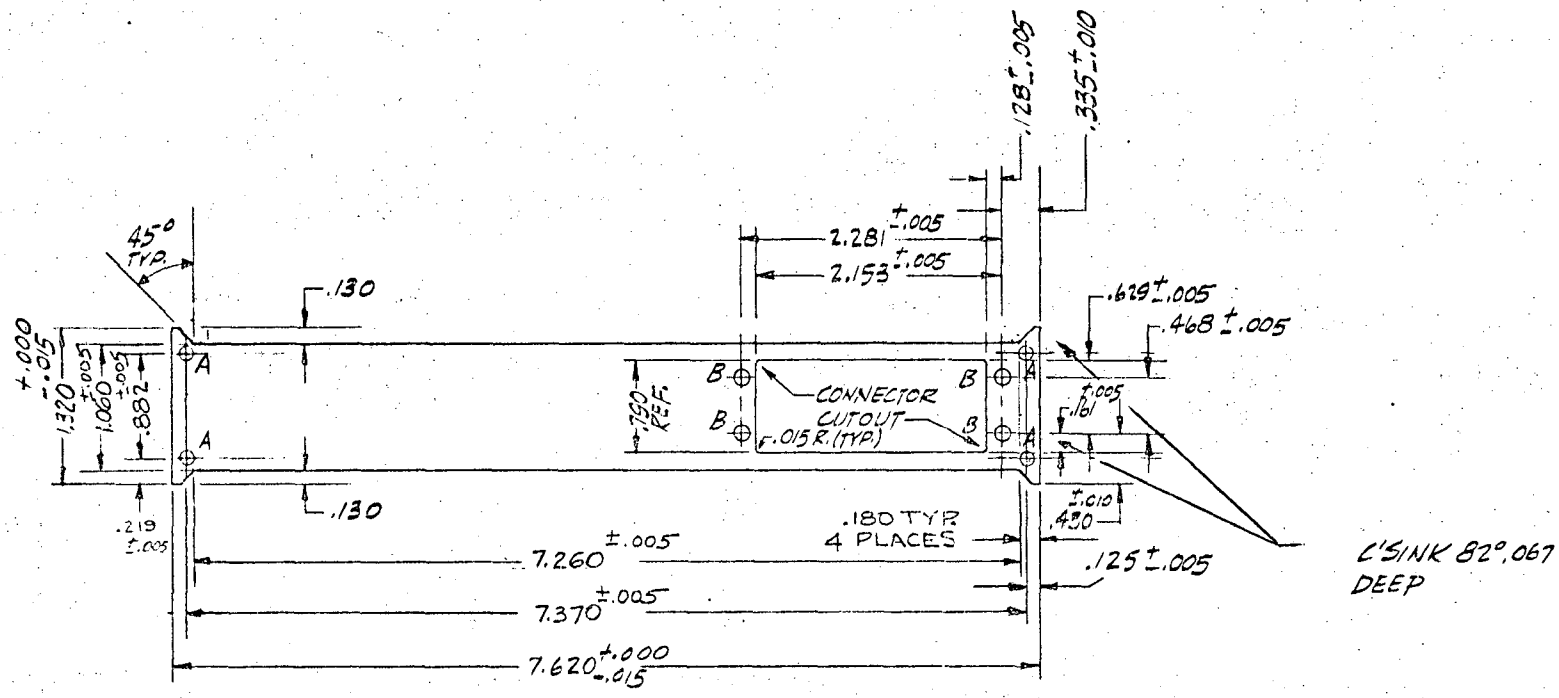

				CHANGES

HOLE SCHEDULE	
DESIG	DESCRIPTION
A	DRILL #31 (4 HOLES)
B	"F" DRILL C'SINK 82°, .020 DEEP
	ON REAR OF PANEL (2 HOLES)
C	#52 DRILL 1/16" DEEP (4 HOLES)

11X3052 M-7	LIST OF MATERIAL	
ITEM OR PART NUMBER	DESCRIPTION	
	.125 ALUMINUM 6061 T-6	

NOTE:
1. ALL CORNERS ARE 90° ±.1° (4)

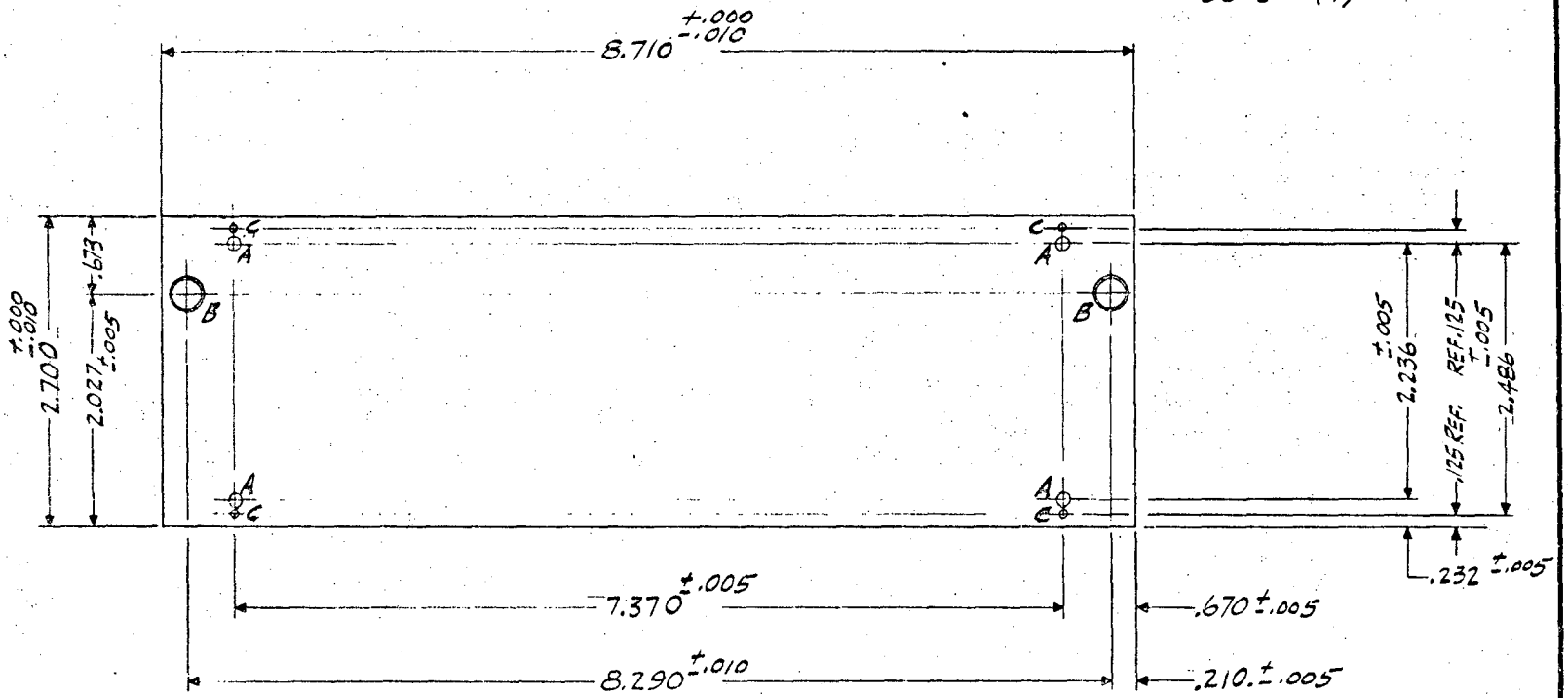

REAR VIEW

					SURFACE TREATMENT	IDENTIFICATION	FINISHES	NOTES—UNLESS OTHERWISE SPECIFIED	SHOP ORDERS	
					SANDBLAST ☐ DEGREASE ☐	PART NO. WHERE SHOWN	SAW CUT FLAME CUT SHEAR	1. TOLERANCES ON DIMENSIONS ±	SERIAL NO.	DO NOT SCALE THIS DWG.
					PRIME COATS	PAINT ☐ ENGRAVE ☐	ROUGH MACHINE 250	2. BREAK EDGES 1/64 MAXIMUM	DATE ISSUED	LAWRENCE RADIATION LABORATORY UNIVERSITY OF CALIFORNIA
					FINISH COATS	STAMP ☐ INSCRIBE ☐	AVERAGE MACHINE 125	3. 30° CHAMFER ENDS OF ALL SCREW THREADS	DATE REQ'D	
					OTHER IRIDITE #14	OTHER	SMOOTH MACHINE 63	4. 1½ PITCH THREAD RELIEF WITH ROUND NOSE TOOL ON ALL MACHINE CUT SCREW THREADS	NO. REQ'D	11X3052 M-7
						HEIGHT		5. ON WELDMENTS, REMOVE SHARP EDGES, BURRS, LOOSE SCALE AND WELD SPATTER	DELIVER TO	
						COLOR		6. VISUAL COMPARISON OF FINISHES WITH G.E. "SURFACE ROUGHNESS SCALE" NO. 866394701 IS ACCEPTABLE.		
NAME LETTER	DRAWN BY	CHECK BY	DATE	CHANGES		LABEL YES ☐ NO ☐				

	SHOWN ON	DESIGN ACCOUNT NO. 4271-04	DATE
STD. FRONT PANEL FOR #2 MODULE FOR STD. 8¾" NUCLEAR INSTRUMENTATION BIN		DRAWN BY LROIV	8-7-64
		CHECKED BY	

Fig. 49

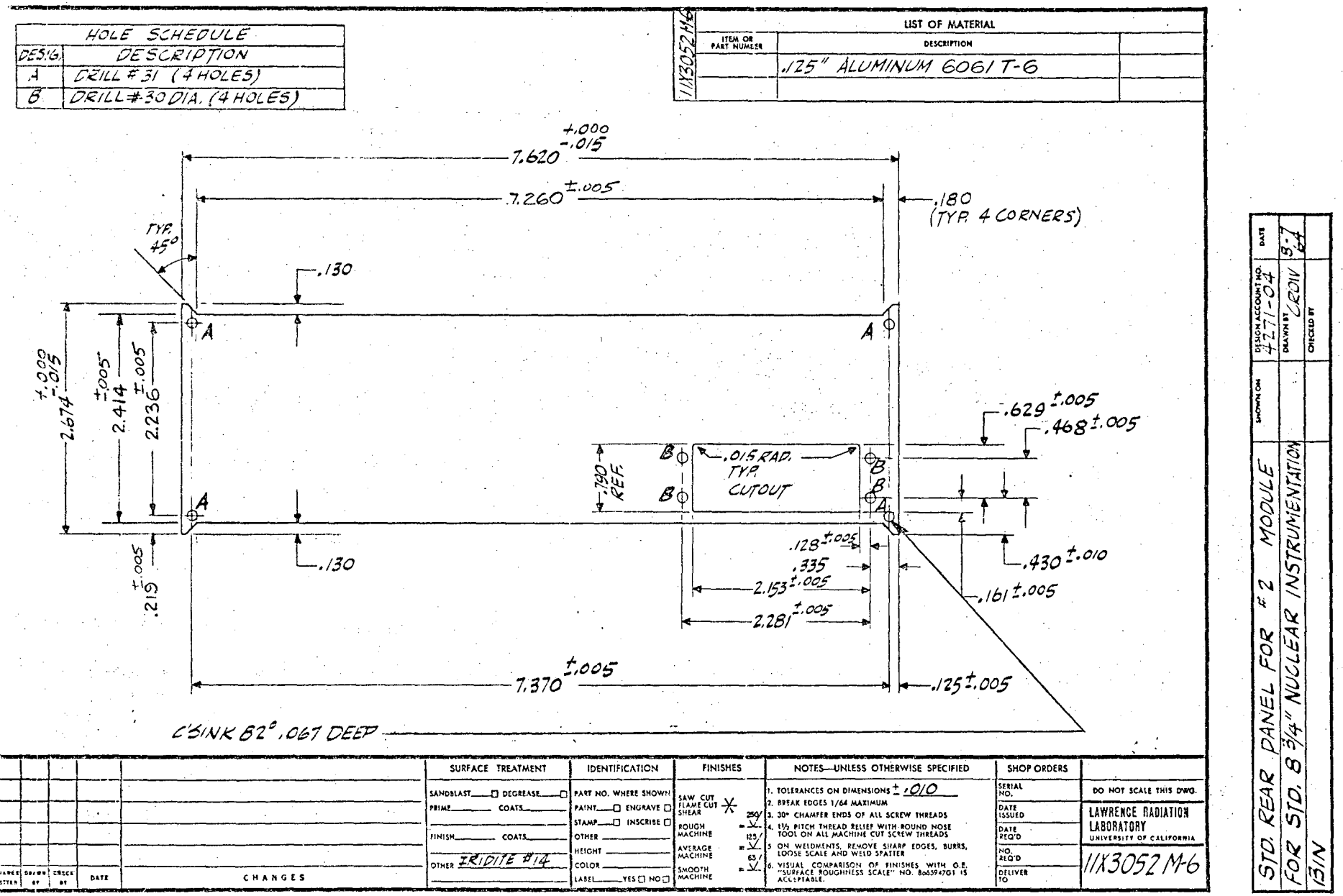
HOLE SCHEDULE
DESIG. DESCRIPTION
A DRILL #31 (4 HOLES)
B DRILL #30 DIA. (4 HOLES)
11X3052 M-6
LIST OF MATERIAL
ITEM OR PART NUMBER
DESCRIPTION
.125" ALUMINUM 6061 T-6
7.620 +.000 -.015
7.260 ±.005
.180 (TYP. 4 CORNERS)
TYP. 45°
.130
A
2.674 +.000 -.015
2.414 ±.005
2.236 ±.005
.219 ±.005
.130
.629 ±.005
.468 ±.005
.015 RAD. TYP. CUTOUT
.790 REF.
B
.128 ±.005
.335
2.153 ±.005
2.281 ±.005
.430 ±.010
.161 ±.005
7.370 ±.005
.125 ±.005
C'SINK 82°, .067 DEEP
SURFACE TREATMENT
SANDBLAST DEGREASE
PRIME COATS
FINISH COATS
OTHER IRIDITE #14
IDENTIFICATION
PART NO. WHERE SHOWN
PAINT ENGRAVE
STAMP INSCRIBE
OTHER
HEIGHT
COLOR
LABEL YES NO
FINISHES
SAW CUT FLAME CUT SHEAR
ROUGH MACHINE 250
AVERAGE MACHINE 125
SMOOTH MACHINE 63
NOTES—UNLESS OTHERWISE SPECIFIED
1. TOLERANCES ON DIMENSIONS ± .010
2. BREAK EDGES 1/64 MAXIMUM
3. 30° CHAMFER ENDS OF ALL SCREW THREADS
4. 1½ PITCH THREAD RELIEF WITH ROUND NOSE TOOL ON ALL MACHINE CUT SCREW THREADS
5. ON WELDMENTS, REMOVE SHARP EDGES, BURRS, LOOSE SCALE AND WELD SPATTER
6. VISUAL COMPARISON OF FINISHES WITH G.E. "SURFACE ROUGHNESS SCALE" NO. 8665947G1 IS ACCEPTABLE.
SHOP ORDERS
SERIAL NO.
DATE ISSUED
DATE REQ'D
NO. REQ'D
DELIVER TO
DO NOT SCALE THIS DWG.
LAWRENCE RADIATION LABORATORY
UNIVERSITY OF CALIFORNIA
11X3052 M-6
DATE
CHANGES
STD. REAR PANEL FOR #2 MODULE
FOR STD. 8 3/4" NUCLEAR INSTRUMENTATION
BIN
SHOWN ON
DESIGN ACCOUNT NO. 4271-04
DRAWN BY CROW
CHECKED BY
DATE 8-7-64

Fig. 50

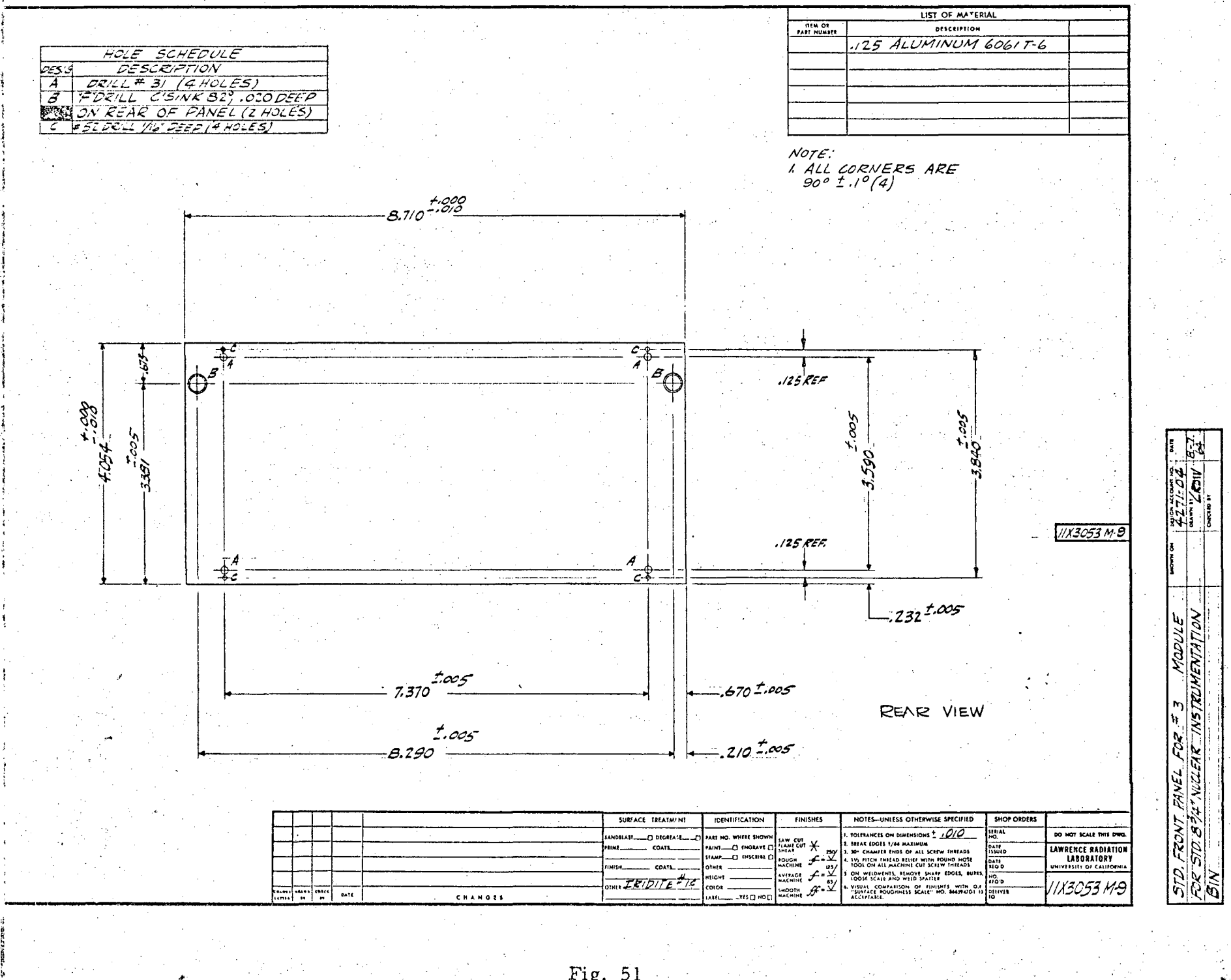
HOLE SCHEDULE
DES'G DESCRIPTION
A DRILL # 31 (4 HOLES)
B "F" DRILL C'SINK 82°, .020 DEEP
ON REAR OF PANEL (2 HOLES)
C #52 DRILL 1/16" DEEP (4 HOLES)
LIST OF MATERIAL
ITEM OR PART NUMBER
DESCRIPTION
.125 ALUMINUM 6061 T-6
NOTE:
1. ALL CORNERS ARE 90° ± .1° (4)
8.710 +.000 -.010
4.054 +.000 -.010
3.381 ±.005
.673
.125 REF
3.590 ±.005
3.840 ±.005
.125 REF.
.232 ±.005
7.370 ±.005
.670 ±.005
8.290 ±.005
.210 ±.005
REAR VIEW
11X3053 M-9
STD. FRONT PANEL FOR #3 MODULE
FOR STD. 8 3/4" NUCLEAR INSTRUMENTATION
BIN
DESIGN ACCOUNT NO. 4271-04
DRAWN BY L.R.W.
DATE 8-7-64
SURFACE TREATMENT
SANDBLAST DEGREASE
PRIME COATS
FINISH COATS
OTHER IRIDITE #14
IDENTIFICATION
PART NO. WHERE SHOWN
PAINT ENGRAVE
STAMP INSCRIBE
OTHER
HEIGHT
COLOR
LABEL YES NO
FINISHES
SAW CUT FLAME CUT SHEAR
ROUGH MACHINE
AVERAGE MACHINE
SMOOTH MACHINE
NOTES—UNLESS OTHERWISE SPECIFIED
1. TOLERANCES ON DIMENSIONS ± .010
2. BREAK EDGES 1/64 MAXIMUM
3. 30° CHAMFER ENDS OF ALL SCREW THREADS
4. 1½ PITCH THREAD RELIEF WITH ROUND NOSE TOOL ON ALL MACHINE CUT SCREW THREADS
5. ON WELDMENTS, REMOVE SHARP EDGES, BURRS, LOOSE SCALE AND WELD SPATTER
6. VISUAL COMPARISON OF FINISHES WITH G.E. "SURFACE ROUGHNESS SCALE" NO. 866594701 IS ACCEPTABLE.
SHOP ORDERS
SERIAL NO.
DATE ISSUED
DATE REQ'D
NO. REQ'D
DELIVER TO
DO NOT SCALE THIS DWG.
LAWRENCE RADIATION LABORATORY
UNIVERSITY OF CALIFORNIA
11X3053 M-9
CHANGES
DATE

Fig. 51

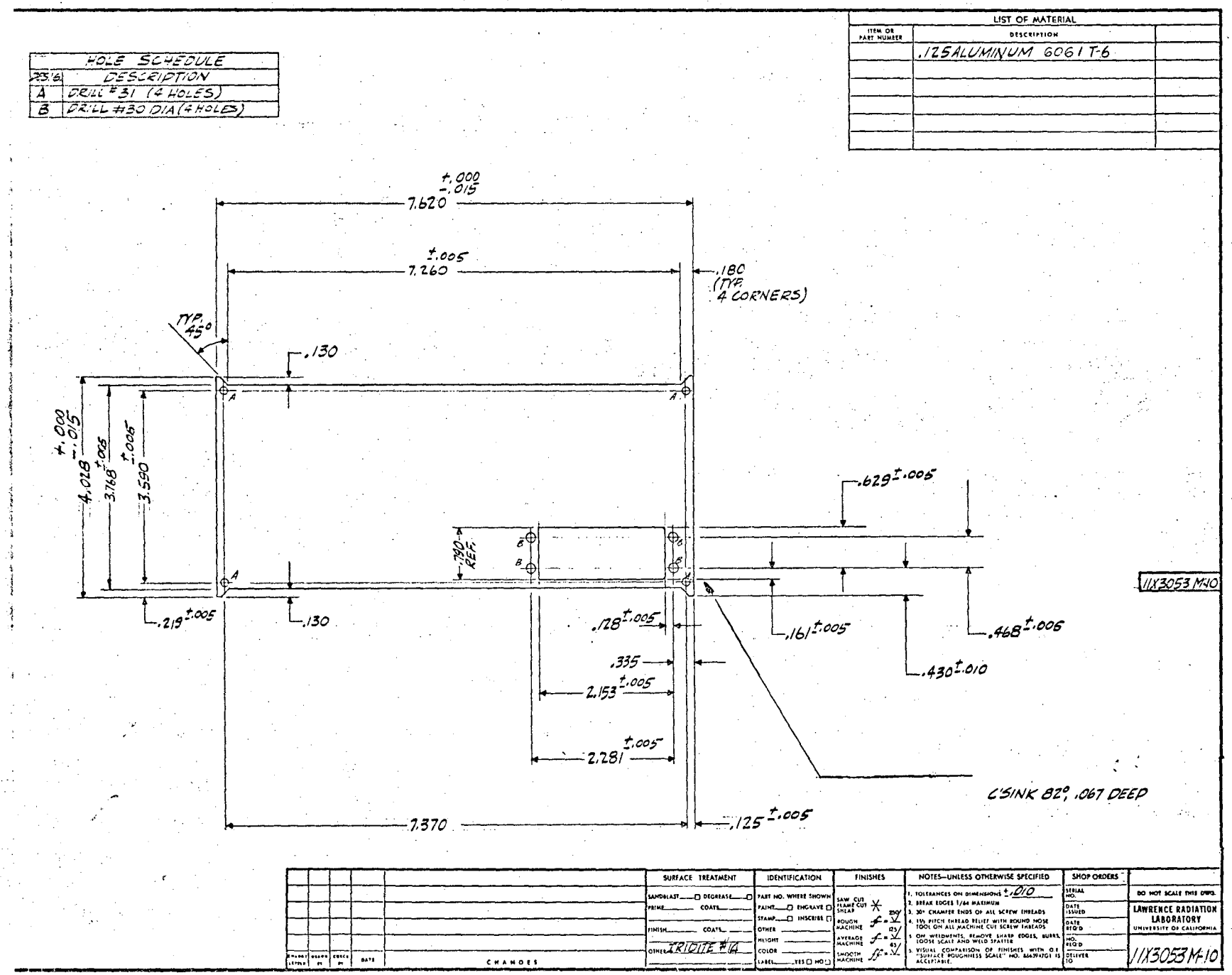
HOLE SCHEDULE
DESCRIPTION
A DRILL #31 (4 HOLES)
B DRILL #30 DIA (4 HOLES)
LIST OF MATERIAL
ITEM OR PART NUMBER
DESCRIPTION
.125 ALUMINUM 6061 T-6
7.620 +.000 -.015
7.260 ±.005
.180 (TYP. 4 CORNERS)
TYP. 45°
.130
4.028 +.000 -.015
3.768 ±.005
3.590 ±.005
.790 REF.
.629 ±.005
.219 ±.005
.130
.128 ±.005
.161 ±.005
.468 ±.006
.430 ±.010
.335
2.153 ±.005
2.281 ±.005
7.370
.125 ±.005
C'SINK 82°, .067 DEEP
11X3053 M-10
STD. REAR PANEL FOR #3 MODULE
FOR STD. 8¾" NUCLEAR INSTRUMENTATION
SURFACE TREATMENT
IDENTIFICATION
FINISHES
NOTES—UNLESS OTHERWISE SPECIFIED
SHOP ORDERS
DO NOT SCALE THIS DWG.
LAWRENCE RADIATION LABORATORY
UNIVERSITY OF CALIFORNIA
11X3053 M-10

Fig. 52

Group V of illustrations

Construction drawings for 8-3/4-inch instrumentation bin

Page number	Figure number	LRL Drawing number	Title	Number required
62	53	11X3043 A-2	Overall assembly	-
63	54	11X3044 A-1	Cross-section assembly	-
64	55	11X3044 M-2	Front frame brace	2
65	56	11X3044 M-3	Side cover (right side)	1
66	57	11X3044 M-14	Side cover (left side)	1
67 also	58	11X3044 M-1	Rear frame brace	2
37	30	11X3044 M-10	Top view and module guide detail	-
38	31	11X3053 M-9A	Module guide (top and bottom)	24
39	32	11X3321 M-1A	Aluminum extrusion for front frame braces	-
40	33	11X3321 M-2A	Aluminum extrusion for rear frame braces	-
41	34	11X3321 M-3A	Aluminum extrusion for front and rear main frame braces	-
42	35	11X3044 M-5	Main frame front top	1
43	36	11X3044 M-13	Main frame front bottom	1
44	37	11X3044 M-8	Punched screen top and bottom bin covers	2
45	38	11X3044 M-7	Main frame, rear top	1
46	39	11X3044 M-6	Main frame, rear bottom	1
51	44	11X3044 M-4	Rear connector panel	1

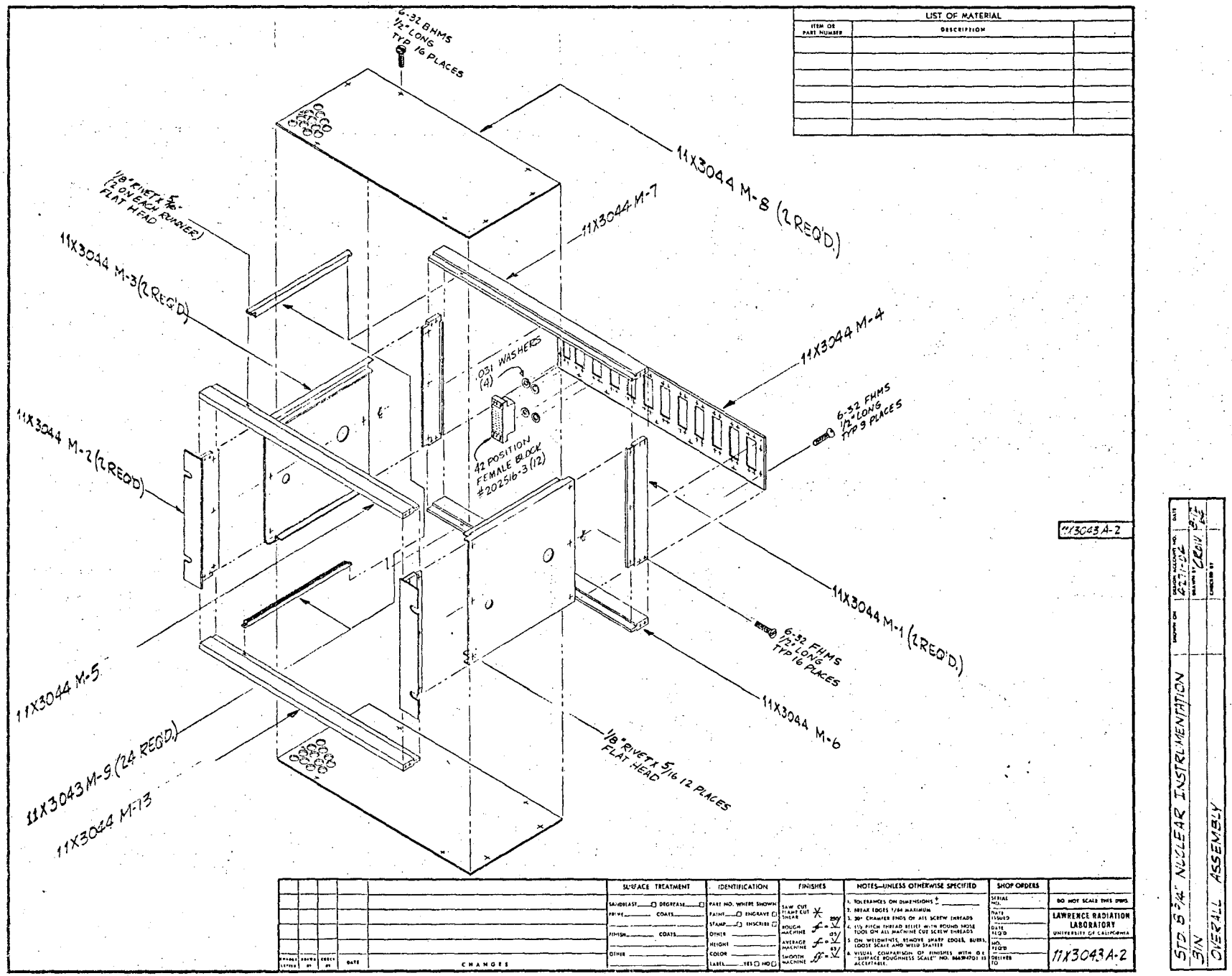
LIST OF MATERIAL
ITEM OR PART NUMBER
DESCRIPTION
6-32 BHMS 1/2" LONG TYP 16 PLACES
11X3044 M-8 (2 REQ'D.)
11X3044 M-7
1/8" RIVETS 5/16" (2 ON EACH RUNNER) FLAT HEAD
11X3044 M-3 (2 REQ'D)
11X3044 M-4
.031 WASHERS (4)
42 POSITION FEMALE BLOCK #202516-3 (12)
6-32 FHMS 1/2" LONG TYP 9 PLACES
11X3044 M-2 (2 REQ'D)
11X3043 A-2
11X3044 M-1 (2 REQ'D.)
6-32 FHMS 7/32" LONG TYP 16 PLACES
11X3044 M-5
11X3044 M-6
11X3043 M-9 (24 REQ'D.)
1/8" RIVETS 5/16 12 PLACES FLAT HEAD
11X3044 M-13
SURFACE TREATMENT
IDENTIFICATION
FINISHES
NOTES—UNLESS OTHERWISE SPECIFIED
SHOP ORDERS
CHANGES
DO NOT SCALE THIS DWG.
LAWRENCE RADIATION LABORATORY
UNIVERSITY OF CALIFORNIA
11X3043 A-2
STD 8 3/4" NUCLEAR INSTRUMENTATION
OVERALL ASSEMBLY

Fig. 53

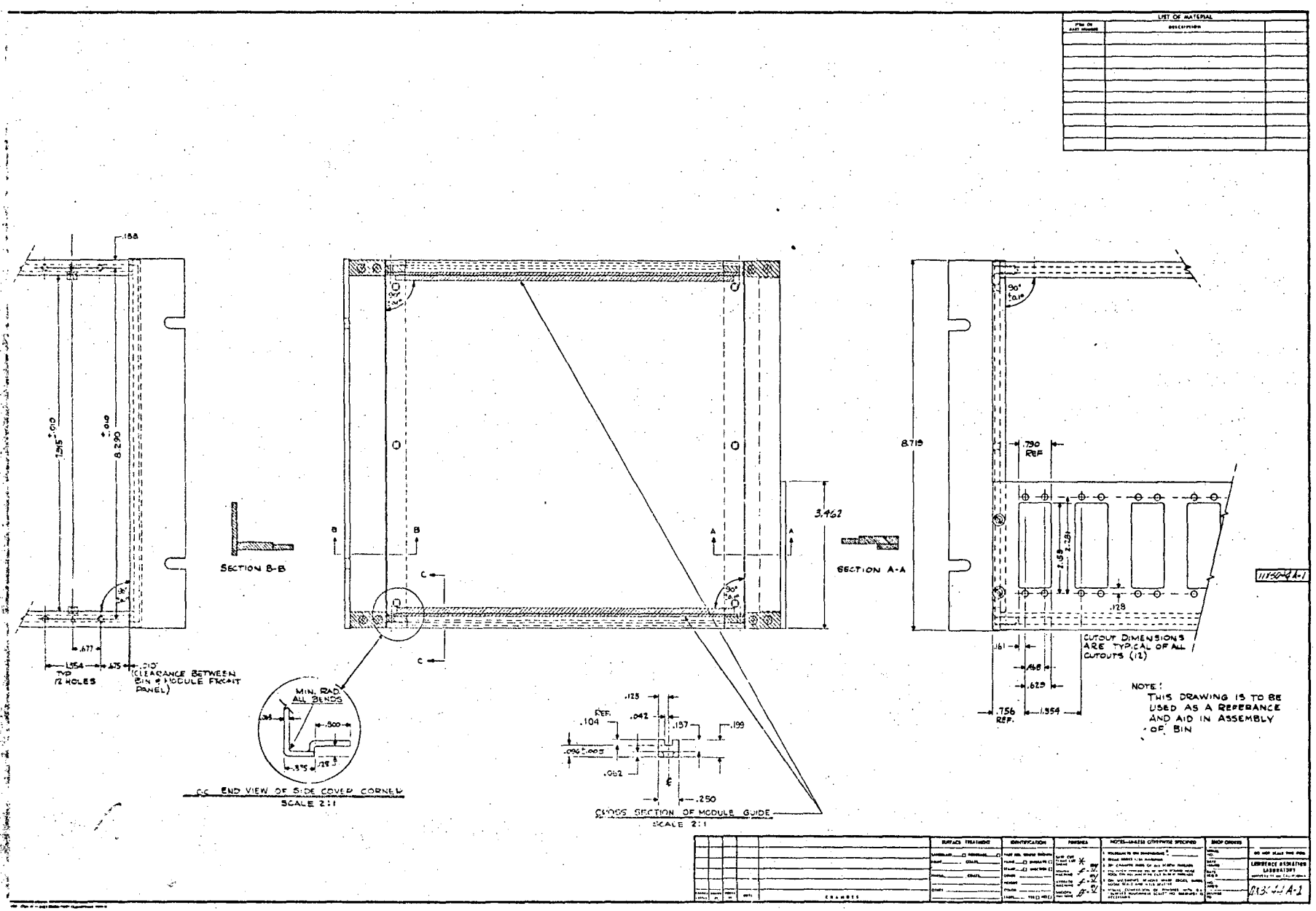
LIST OF MATERIAL
SECTION B-B
SECTION A-A
3.462
8.719
.790 REF
.128
CUTOUT DIMENSIONS ARE TYPICAL OF ALL CUTOUTS (12)
NOTE: THIS DRAWING IS TO BE USED AS A REFERANCE AND AID IN ASSEMBLY OF BIN
MIN. RAD. ALL BENDS
END VIEW OF SIDE COVER CORNER
SCALE 2:1
CROSS SECTION OF MODULE GUIDE
SCALE 2:1
.125
.042
.157
.199
.104
.062
.250
.677
1.354
.675
.010 (CLEARANCE BETWEEN BIN & MODULE FRONT PANEL)
TYP 12 HOLES
8.290
7.915
.188
LAWRENCE RADIATION LABORATORY
CROSS SECTION ASSEMBLY (REF)

Fig. 54

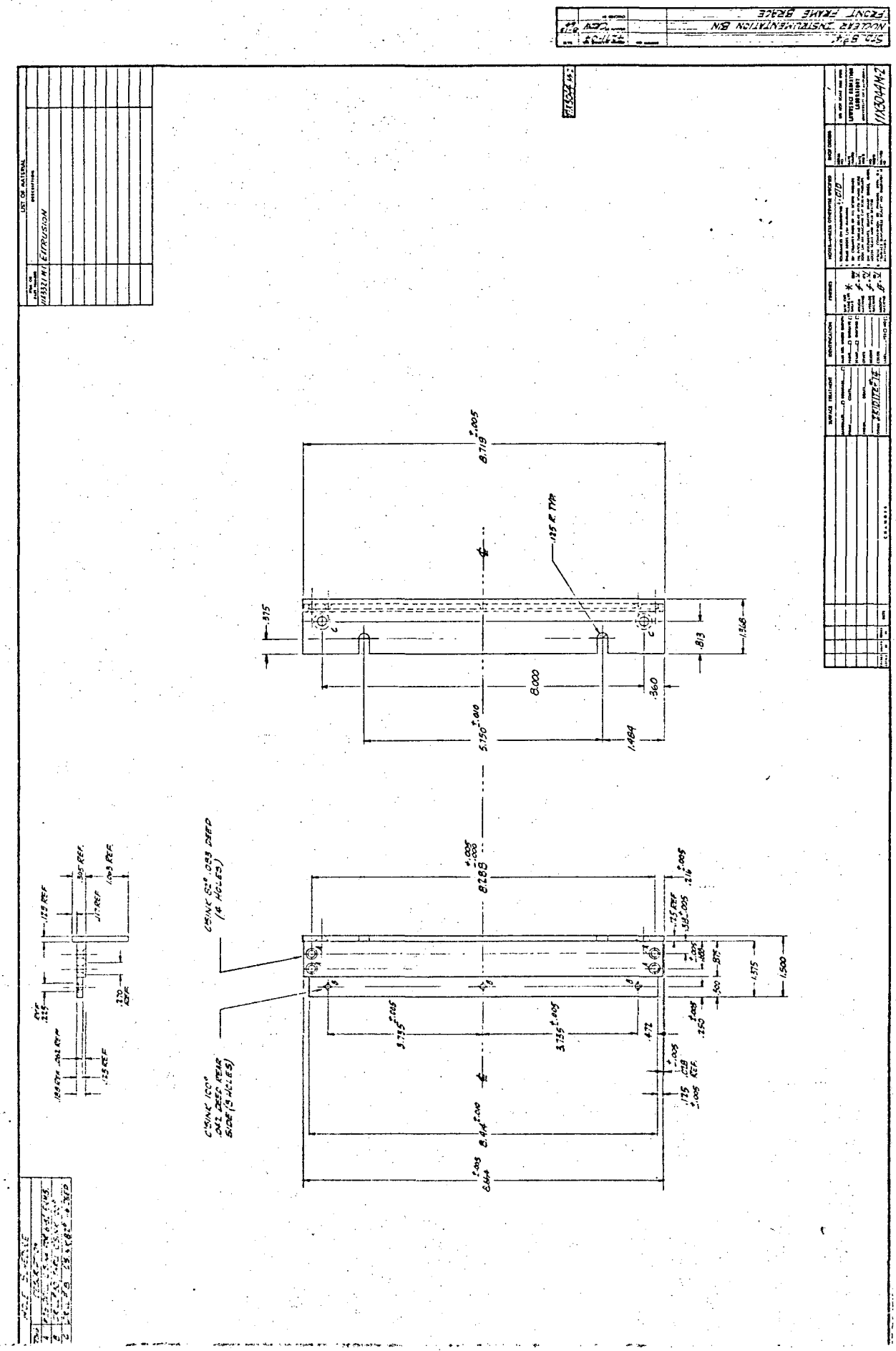
NUCLEAR INSTRUMENTATION BIN
FRONT FRAME BRACE
EXTRUSION
8.719
.125 R TYP
8.000
5.750
1.484
8.288
3.735
1.500
1.375
.813
.360
.375
1X3044M-2

Fig. 55

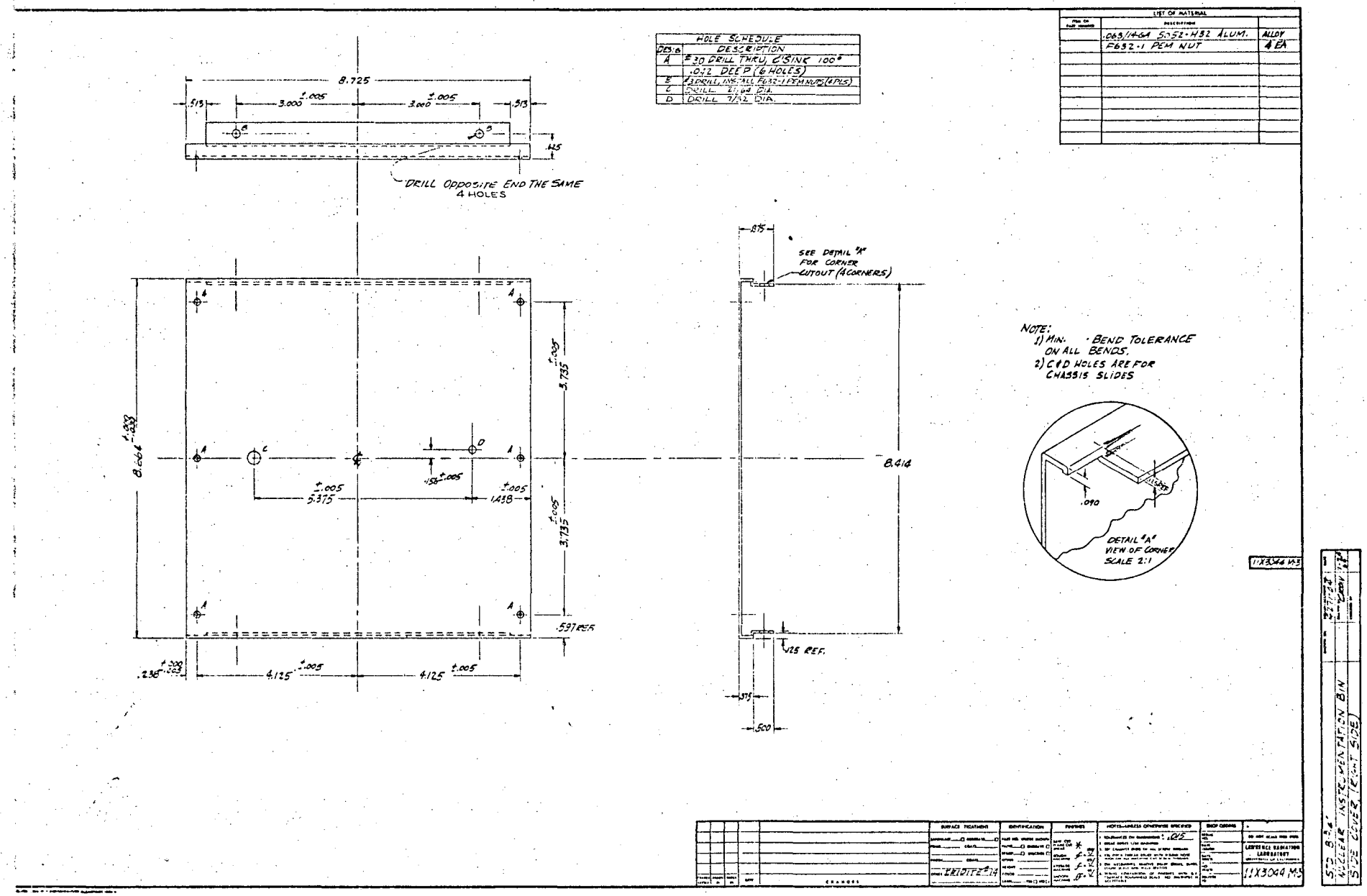
HOLE SCHEDULE
DESIG DESCRIPTION
A #30 DRILL THRU, C'SINK 100°
.042 DEEP (6 HOLES)
B #3 DRILL, INSTALL F632-1 PEM NUTS (4 PLS)
C DRILL 21/64 DIA.
D DRILL 7/32 DIA.
LIST OF MATERIAL
.063/14-64 5052-H32 ALUM. ALLOY
F632-1 PEM NUT 4 EA
8.725
3.000 ±.005
3.000 ±.005
.513
.513
.625
DRILL OPPOSITE END THE SAME
4 HOLES
SEE DETAIL "A"
FOR CORNER
CUTOUT (4 CORNERS)
.875
8.414
3.735 ±.005
3.735 ±.005
8.664 +.000 -.000
5.375 ±.005
1.438 ±.005
.156 ±.005
.597 REF.
.125 REF.
4.125 ±.005
4.125 ±.005
.238 +.000 -.005
.375
.500
NOTE:
1) MIN. BEND TOLERANCE ON ALL BENDS.
2) C & D HOLES ARE FOR CHASSIS SLIDES
.090
DETAIL "A"
VIEW OF CORNER
SCALE 2:1
11X3044 M3
NUCLEAR INSTRUMENTATION BIN
SIDE COVER (RIGHT SIDE)
LAWRENCE RADIATION LABORATORY
11X3044 M3

Fig. 56

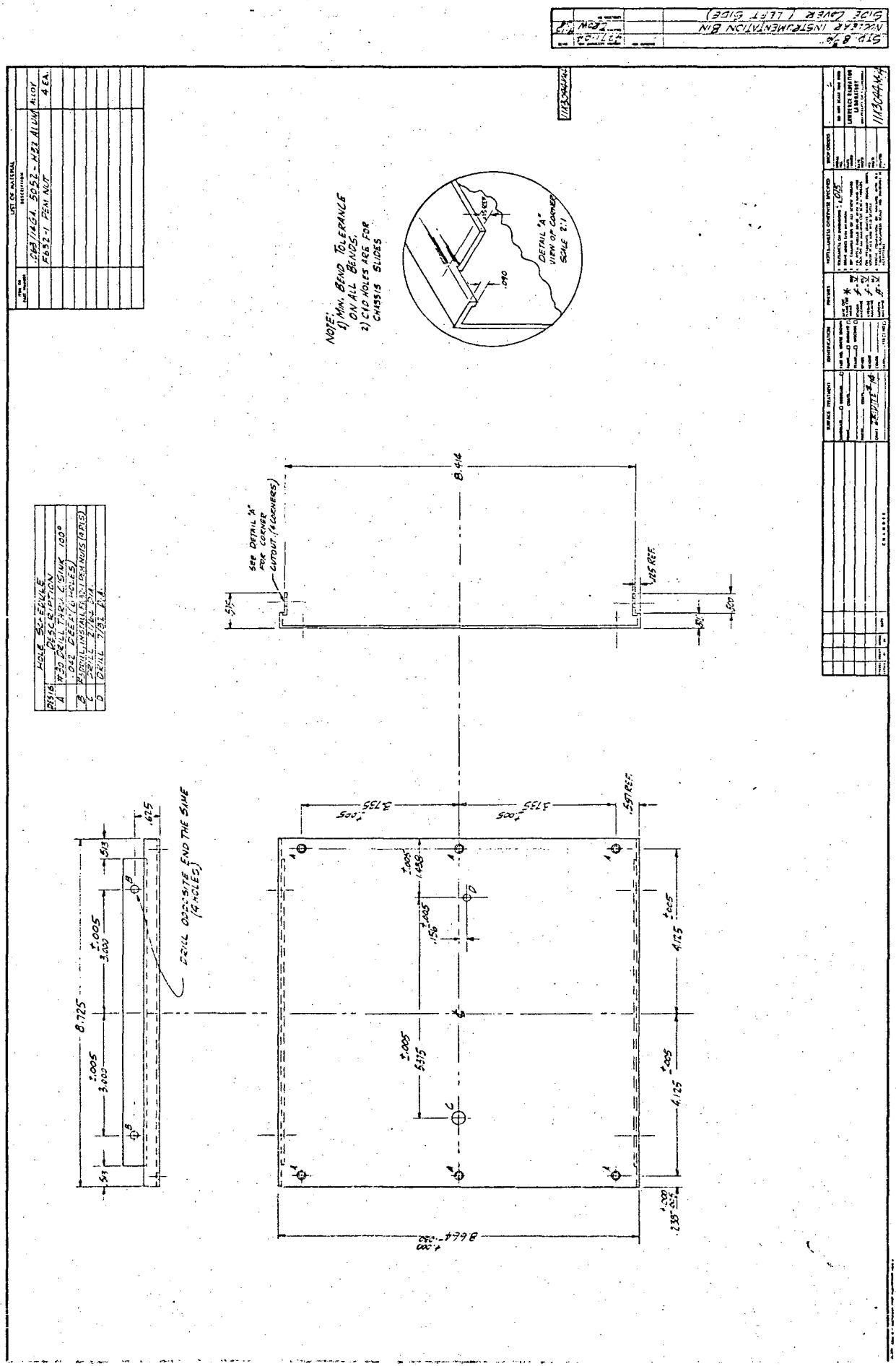
NUCLEAR INSTRUMENTATION BIN
SIDE COVER (LEFT SIDE)
LIST OF MATERIAL
.063 14GA. 5052-H32 ALUM ALLOY
F852-1 PEM NUT 4 EA.
NOTE:
1) MIN. BEND TOLERANCE ON ALL BENDS.
2) C'SK HOLES ARE FOR CHASSIS SLIDES
DETAIL "A" VIEW OF CORNER SCALE 2:1
HOLE SCHEDULE
#30 DRILL THRU C'SINK 100°
.042 DEEP (6 HOLES)
DRILL, INSTALL F852-1 PEM NUTS (4 PLS)
DRILL 21/64 DIA.
DRILL 7/32 DIA.
SEE DETAIL "A" FOR CORNER CUTOUT (4 CORNERS)
DRILL OPPOSITE END THE SAME (4 HOLES)
8.414
8.725
3.735
4.125
8.664

Fig. 57

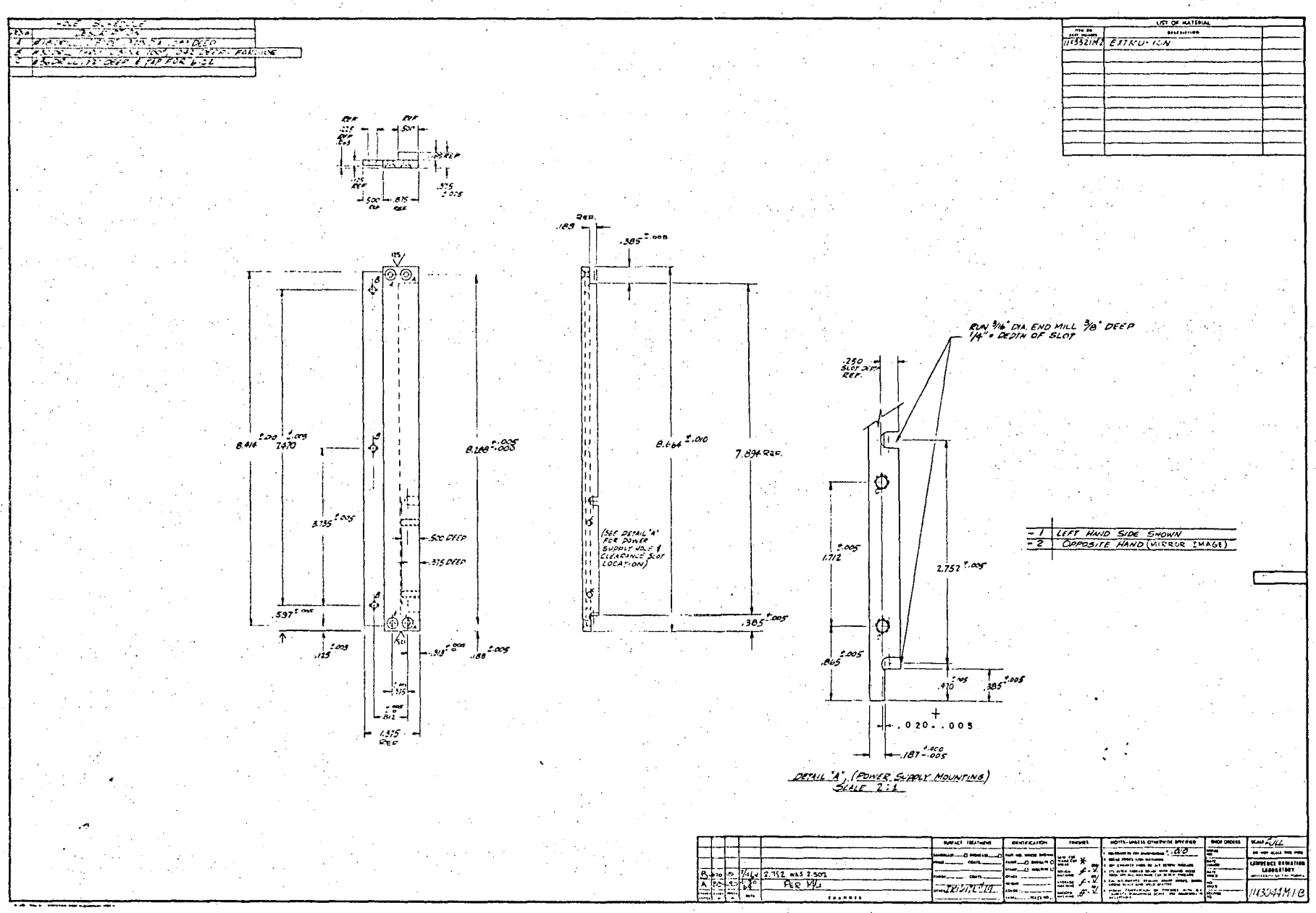
LIST OF MATERIAL
EXTRUSION
RUN 3/16" DIA. END MILL 3/8" DEEP
1/4" = DEPTH OF SLOT
.250 SLOT DEPTH REF.
(SEE DETAIL "A" FOR POWER SUPPLY HOLE & CLEARANCE SLOT LOCATION)
8.414 ±.010
7.470 ±.005
8.288 ±.005 -.003
8.664 ±.010
7.894 REF.
3.735 ±.005
.500 DEEP
.375 DEEP
.597 ±.005
.125 ±.005
.313 ±.005 -.0
.188 ±.005
.375
.812
1.375 REF
.385 ±.005
.189 REF.
.385 ±.005
1.712 ±.005
2.752 ±.005
.865 ±.005
.470 ±.005
.385 ±.005
.020 ±.005
.187 +.000 -.005
-1 LEFT HAND SIDE SHOWN
-2 OPPOSITE HAND (MIRROR IMAGE)
DETAIL "A", (POWER SUPPLY MOUNTING)
SCALE 2:1
2.752 WAS 2.502
PER M/L
SCALE FULL
CAMBRIDGE RADIATION LABORATORY
1143044M1B
STD 8 3/4"
NUCLEAR INSTRUMENTATION BIN
REAR FRAME BRACE

Fig. 58

This report was prepared as an account of Government sponsored work. Neither the United States, nor the Commission, nor any person acting on behalf of the Commission:

A. Makes any warranty or representation, expressed or implied, with respect to the accuracy, completeness, or usefulness of the information contained in this report, or that the use of any information, apparatus, method, or process disclosed in this report may not infringe privately owned rights; or

B. Assumes any liabilities with respect to the use of, or for damages resulting from the use of any information, apparatus, method, or process disclosed in this report.

As used in the above, "person acting on behalf of the Commission" includes any employee or contractor of the Commission, or employee of such contractor, to the extent that such employee or contractor of the Commission, or employee of such contractor prepares, disseminates, or provides access to, any information pursuant to his employment or contract with the Commission, or his employment with such contractor.