UCRL-11703

University of California

Ernest O. Lawrence Radiation Laboratory

TWO-WEEK LOAN COPY

This is a Library Circulating Copy which may be borrowed for two weeks. For a personal retention copy, call Tech. Info. Division, Ext. 5545

SAMPLING BIAS IN SCANNING PROTON-RECOIL TRACKS IN NUCLEAR EMULSION

Berkeley, California

DISCLAIMER

This document was prepared as an account of work sponsored by the United States Government. While this document is believed to contain correct information, neither the United States Government nor any agency thereof, nor the Regents of the University of California, nor any of their employees, makes any warranty, express or implied, or assumes any legal responsibility for the accuracy, completeness, or usefulness of any information, apparatus, product, or process disclosed, or represents that its use would not infringe privately owned rights. Reference herein to any specific commercial product, process, or service by its trade name, trademark, manufacturer, or otherwise, does not necessarily constitute or imply its endorsement, recommendation, or favoring by the United States Government or any agency thereof, or the Regents of the University of California. The views and opinions of authors expressed herein do not necessarily state or reflect those of the United States Government or any agency thereof or the Regents of the University of California.

Submitted to Review of Scientific Instruments

UCRL-11703

UNIVERSITY OF CALIFORNIA
Lawrence Radiation Laboratory
Berkeley, California

AEC Contract No. W-7405-eng-48

SAMPLING BIAS IN SCANNING PROTON-RECOIL TRACKS IN NUCLEAR EMULSION

Richard L. Lehman, Olga M. Fekula,
and J. Robert Wayland, Jr.

October 7, 1964

SAMPLING BIAS IN SCANNING PROTON-RECOIL TRACKS IN NUCLEAR EMULSION

Richard L. Lehman, Olga M. Fekula,
and J. Robert Wayland, Jr.

Lawrence Radiation Laboratory
University of California
Berkeley, California

Abstract

A new rapid method, suitable for use with automatic coordinate readout microscope, of sampling track distributions in nuclear emulsion was tested for bias. Length and angular distributions of track samples taken using this method from emulsions exposed edge-normal to single-energy neutron beams were compared with those predicted by s-wave scattering theory. No significant sampling bias was found.

SAMPLING BIAS IN SCANNING PROTON-RECOIL TRACKS IN NUCLEAR EMULSION*

Richard L. Lehman,[†] Olga M. Fekula,
and J. Robert Wayland, Jr.[§]

I. INTRODUCTION

The development of microscopes adapted for automatic coordinate readout has increased the potential usefulness of nuclear track emulsion as a fast-neutron spectrometer.[1-3] However, although automatic readout solved the problems of rapid recording and analysing of track measurements, it left unsolved two other major problems in this use of emulsion: rapid unbiased track sampling, and suitable correction factors.

In earlier work scanning was usually restricted to tracks that lay within a right rectangular pyramid parallel to the beam axis of the incident neutrons.[4,5] Correction factors for such restricted samples have been derived by Richards.[6] Alternatively, every track within a given volume could be scanned. However, because both these methods are slow, and neither can match the speed of the new recording systems, we have introduced random-walk sampling:* that track is measured next which lies with its end nearest the end point of the track just previously selected and measured.[2,7]

*It requires about 6-8 hours of scanning time to select and measure 1000 tracks by use of this method.

Intuitively, the random-walk method should give an unbiased track sample, but it can be argued that because the shorter tracks present effectively only one end point to the scanner, this method biases against them. In an attempt to answer the question, "How much bias, if any, does the random-walk method introduce?" proton-recoil track distributions taken from nuclear emulsions exposed to single-energy fast neutrons have been compared with those predicted by theory.

II. PROCEDURES

A. Experimental Method

Pellicles of unmounted Ilford L.4 nuclear track emulsion, 1 by 3 in. and 600 μ thick, were wrapped in a single layer of black paper. These were mounted in a special holder (Fig. 1) and exposed, edge-normal, to single-energy neutrons 18 cm from a tritium or deuterium target (and at 0° from the beam axis) at the U. S. Naval Radiological Defense Laboratory Van de Graaff accelerator. In order to minimize neutron scattering, the beam was directed into a tent-walled room outside the accelerator building, where it struck the target located 1.5 m above a cement floor. The fast-neutron intensity was monitored by a BF_3 long counter, 1.0 meter distant from the target and at an angle of 45° from the beam axis. The exposure details are given in Table I.

After the exposures, the films were opened in a darkroom and measured for thickness and lateral extent. They were then developed and fixed by a modified cold-cycle process[7] in which the solutions were kept

at 5°C. To reduce thickness shrinkage, the processed emulsions were soaked for 24 hours in a concentrated solution of wood rosin in ethanol (35 g per 100 ml). In this case, the rosin treatment caused a 3 to 10% net permanent swelling of the emulsion over the initial dimensions. The films were mounted on 1x3-in. microslides with clear epoxy cement before they were scanned. The emulsions were manufactured 27 February 1961, developed 3 months later, and scanned within 6 months of development.

B. Scanning and Analysis

The center third of the 1x3-in. emulsions was scanned by use of an automatic microcoordinate readout microscope and the random-walk sampling method. The track samples amounted to about 0.3% of the total number of tracks in this sampling volume. Only those tracks having both end points within the emulsion were measured, i.e. the emulsion hydrogen served as an internal proton radiator.

The tracks were analysed with the help of an IBM 650 computer and three computer programs. RECOIL I sorted the entire track sample into length and energy distributions.[7] RECOIL II, accepting only those tracks lying within a polar half angle of 30 deg with the neutron beam axis (that was carefully aligned with the y-axis of the nuclear emulsion), sorted tracks into length and angle distributions. RECOIL II also re-created the incident neutron spectra by means of computing

$$E_n = E_p \sec^2\theta \qquad (1)$$

for each track in the 30 deg fraction. The proton track energy E_p is

obtained by comparing the track length ℓ with a range-energy table in the computer memory.[1] The product of E_p and $\ell^2/(\Delta y)^2$ (the secant squared term) was sorted into 1 of 85 neutron energy intervals. At the end of the computation, the number in each interval was corrected by the factors $1/\sigma P \Delta E$ in order to give the accurate shape of the neutron spectrum. Here σ is the fast neutron collision cross section for hydrogen, P is the geometry correction factor, and ΔE the size of the interval. An independent measure of the incident neutron energy spectra based on differentiation of the corrected smoothed proton energy distributions from the RECOIL I output was obtained using a third program, RECOIL DD.

C. Distributions Predicted from Theory

The basic equation that describes the s-wave scattering distributions from single-energy (< 20 MeV) neutron collision with hydrogen nuclei is

$$\frac{dN}{d\Omega^*} = \frac{N_0}{4\pi} \tag{2}$$

from which can be derived the proton track angle and energy distributions:

$$\frac{dN}{d\Omega} = \frac{N_0}{\pi}\left(1 - \frac{\Omega}{2\pi}\right) = \frac{N_0}{\pi}\cos\theta, \tag{3}$$

$$\frac{dN}{d\theta} = N_0 \sin 2\theta, \tag{4}$$

and

$$\frac{dN}{dE_p} = \frac{N_0}{E_n}. \tag{5}$$

*center of mass coordinate system

If it is assumed that

$$\ell = a\, E_p^n , \tag{6}$$

in which a and n are constants so that

$$\ell_m = a\, E_n^n , \tag{7}$$

then one may write

$$\frac{dN}{d\ell} = \frac{N_o}{n} \left(\ell^{(1/n-1)} / \ell_m^{1/n} \right) . \tag{8}$$

The measured track-sample distributions are compared with those predicted by Eqs. (4) and (8).

D. Correction Factors

A sample will be biased against the (unmeasured) longer tracks that more frequently end outside the emulsion unless it is corrected by a factor 1/P that is based on the dimensions of the emulsion and the geometry of the exposure. P is the probability that a track of length ℓ which originates in the emulsion will also end in the emulsion.

When an emulsion is exposed by <u>isotropic</u> or <u>face-normal</u> neutron beams, the following correction factors may be simply derived from Eq. (2) in terms of the emulsion thickness T:*

isotropic $\quad P(\ell) = 1 - \ell/2T \quad (\ell \leq T),\ P(\ell) = T/2\ell \quad (\ell \geq T)$ (9)

face normal $\quad P(\ell) = 1 - \ell \cos\theta/T$. (10)

* True values of ℓ, T, and θ at exposure. We assume the emulsion has "infinite" lateral extent and that the tracks are rectilinear.

The correction factors suitable for edge-normal neutron beams were derived as follows. Consider a parallel beam of single-energy neutrons that enters a piece of nuclear emulsion normal to an edge that defines the x,z plane. Further consider the geometry when a neutron collides at Q with a proton that travels for a distance ℓ at angle θ from the path-axis of the incident neutron, as in Figs. 2 and 3. There is equal chance that the end of the track will lie at any point on the circumference of a circle of radius $\ell \sin \theta$ about V. Because there is symmetry in the +x and -x direction, and because there is a "back and forth" symmetry as Q moves between z = 0 and z = T, or from z = T to z = 0, only the quadrant R S U V is used.

If Q lies at a depth exactly equal to $\ell \sin \theta$, then all possible tracks (of the given ℓ, θ) end within the emulsion along R S U. However, if Q lies at a depth less than $\ell \sin \theta$, such as $\ell \sin \theta \sin \phi$, then only a fraction of the possible tracks—those ending on arc S U—will end within the emulsion. In fact, the probability that a track (of given ℓ, θ) will lie on arc S U is given by

$$P(z) = (2/\pi) \text{ arc sin } (z/\ell \sin \theta), \text{ for } z \leq \sin \theta. \quad (11)$$

The average probability that a track will lie along arc S U as z varies from 0 to $\ell \sin \theta$ is given by

$$P_{av} = \int_0^{\ell \sin \theta} \frac{dz}{\ell \sin \theta} \cdot P(z) = 1 - \frac{2}{\pi} . \quad (12)$$

This average probability applies to the fraction $(\ell \sin \theta)/T$ of the

emulsion. The probability for the fraction $1 - (\ell \sin\theta)/T$ is unity. Therefore

$$P(\ell,\theta) = 1 - (\ell \sin\theta)/T + (1 - 2/\pi)(\ell \sin\theta)/T = 1 - (2/\pi)(\ell \sin\theta)/T. \quad (13)$$

In more useful form,

$$P(\ell,E_n) = 1 - (2/\pi)(\ell/T)(1 - E_p/E_n)^{\frac{1}{2}}, \text{ for } \ell \sin\theta \leq T, \quad (14)$$

is the probability that a proton track of energy E_p (and length ℓ), arising by collision with a neutron of energy E_n at any depth in the emulsion, will also end inside the emulsion.

When $\ell \sin\theta$ T, $P(z) = (2/\pi) \arcsin (z/\ell \sin\theta)$ (15)

as in Fig. 4, and

$$P_{av}(\ell,\theta) = (2/\pi) \int_0^T (dz/T)\ P(z); \quad (16)$$

$$P_{av}(\ell,\theta) = (2/\pi T)\ \left[T \arcsin(T/a) + \sqrt{a^2 - T^2} - a\right], \quad (17)$$

in which $a = \ell \sin\theta$.

It should be emphasized that the derived factors for face- and edge-normal exposure require a knowledge of the angle of scattering as well as the track length. In this they differ from the isotropic and pyramidal-sample correction factors. Also, because the track length is not independent of the angle of scattering, it is incorrect to obtain an "average" correction factor from Eqs. (10), (13), and (16) by integration over θ.

In practice, tracks must be sorted into θ intervals, and (within the appropriate θ interval) into length intervals, before suitable

correction factors can be applied. Some examples of geometry correction factors for various exposures, scattering angles, and track length energies are presented in Fig. 5.

III. EXPERIMENTAL RESULTS

Length Distributions

The computed length distributions of tracks selected and measured by use of random-walk sampling are compared with those predicted by Eq. (8) in the Figures 6-8. The agreement when all the tracks are used is good. However, the length distributions from the 30-deg fractions differ strongly from those given by the equation, namely, identical distributions with the total-track curves above $0.6\,\ell_{max}$ and no tracks below. These results are discussed below.

Angular Distributions

The 30-deg fractions, which were analysed into scattering-angle distributions in the xy and zy planes of the emulsions, are compared with the expected distribution curves in Figs. 9-11. Although the agreement in the xy plane is good, there is a distinct bias in the zy plane in favor of tracks with a shallow dip angle.

Neutron Spectra

Six single-energy neutron beams (in the range 0.5 - 15 MeV) were directed edge-normal into nuclear track emulsions and track samples were obtained by random-walk scanning. Fig. 12 shows the typical result when the same track sample is analysed by the secant squared (RECOIL II) and the

differentiation (RECOIL DD) methods. In every case, the latter method gave neutron spectra that were more accurate and about twice as precise.

IV. DISCUSSION

Length Distributions

It is convenient to discuss the length distributions in terms of the types of tracks that compose them:

(a) proton tracks from first collisions of the primary neutron beam with hydrogen nuclei, either directly (H), or after one or two previous scatterings from the heavier nuclei in the emulsion (ZH or ZZ'H);

(b) proton tracks from second or third collisions of the neutron beam with hydrogen nuclei (HH', ZHH', or HH'H");

(c) Proton tracks from nuclear n,p reactions;

(d) α-particle tracks* from nuclear n,α reactions, and

(e) α-particle tracks from the decay of radioactive contaminants present in the manufactured emulsions.

The expected length distributions (Eq. (8) are composed exclusively of type (a) tracks, and the distributions of tracks of types (b) through (e) are superimposed on the expected distributions. The relative numbers of tracks of types (a) and (b) may be found by use of Fig. 13, which gives the probabilities for neutron interactions with the various

*Visual discrimination between proton and alpha tracks in L.4 emulsion is difficult.

elements in nuclear emulsion.

The fraction of the total number of proton-recoil tracks of type (b) was found to be 0.09, 0.05, and 0.04, respectively, for the distributions in Figs. 6 through 8. In Fig. 6, most of these tracks fall in the 7- to 3-μ length region where the sampling efficiency drops to zero. Type (b) tracks are not noticeable in Figs. 7 and 8 for a different reason: they are relatively few in number, and they are spread out over a wide range of lengths.

Tracks from the two sources that constitute type (a) are separated by use of the length distribution from the 30-deg fraction. Because a 30-deg fraction track of length ℓ_m must be an H track, the ratio of the measured values of $\Delta N/\Delta \ell$ (taken near the maximum track length of the sample) gives the ratio H/(H + ZH + ZZ'H). The measured ratios 0.59, 0.89, and 0.98, respectively, for the distributions in Figs. 6 through 8 agree to ± 10% with estimates based on the elastic scattering probabilities in Fig. 13.

Although many nuclear (n,p), (n,d), (n,T), (n,He^3), and (n,α) reactions are energetically possible with the heavy nuclei present in nuclear emulsions,[9] only the O (n,α)C and the N(n,α)B reactions generate numbers of tracks that are significant in comparison with the proton recoils. The former reaction is expected to generate 8- to 9-μ tracks in film A-21, amounting to about 3% of the total proton tracks. The latter reaction is not expected to contribute significantly to the track distribution with neutron energies below 10 MeV. The 6- to 7-μ tracks

from the N(n, p)C reaction, common when nuclear emulsion is exposed to thermal neutrons, are not in evidence.

The prominent peak near 21 μ in films A-20 and A-21 is composed of α tracks from decay of radioactive substances present in the emulsion. Although it has been impossible to identify the emitters that contribute to this peak, they may be among those listed in Table III.

This agreement helps to interpret the departure (especially noticeable in Fig. 6) of the 30-deg fractions from the expected length distributions. In film A-18, more than one-half of the 10-15 μ tracks were created by neutrons scattered at least once from the high-Z atoms in the emulsion. Such ZH or ZZ'H tracks have a low probability of lying within a cone of half angle 30 deg with the incident neutron beam axis.

Because of internal scattering within the emulsion, it is appropriate to apply the isotropic exposure correction factor, regardless of the actual incident beam geometry, when the neutron energy falls below about 2 MeV.

Angular Distributions

Insufficient care in coming to a sharp depth focus on the terminal grains is very likely the cause of the observed bias in the zy angular distributions, and use of a 100 X objective has been found to correct this. Any angular selection bias inherent in the random-walk method is expected to be revealed in both the xy and zy planes, since every track is analyzed in both planes.

Neutron Spectra

The somewhat surprising finding that the neutron spectra measured by the differentiations method were in each case more precise than those measured by the secant-squared method may be interpreted as follows. The 30-deg samples in all cases contained considerable numbers of tracks shorter than the expected cutoff at $\approx 0.6\ell_m$. These consist of high-angle ZH tracks, secondary-scattering HH' and ZHH' tracks, and α-particle tracks. Such tracks give low-energy tails to the neutron spectra. In addition, the energy of a single neutron computed by use of the secant-squared method is the product of three measured quantities (Sec. II), whereas the measurement of slope at the energy maximum is subject only to the local precision of the proton energy distribution.

V. CONCLUSIONS

Track samples obtained by the random-walk method have length and angular distributions that agree with those predicted by equations derived from s-wave collision dynamics. There is no evidence for inherent sampling bias. The track samples contain, in addition to the expected tracks, significant numbers of tracks from α particles and from second collisions of the neutron beam within the emulsion. Because of this, it is appropriate to use the isotropic exposure correction factor for measurements below 2MeV.

The determination of the energy of the incident neutrons by differentiation of the proton-track energy distribution was more precise than the determination by direct measurement of track length and scattering angle.

ACKNOWLEDGMENTS

The authors wish to thank Mr. Eugene Tochilin and the van de Graaff accelerator staff of the U. S. Naval Radiological Defense Laboratory for arranging and carrying out the irradiations, and Dr. Grove C. Nooney of the Lawrence Radiation Laboratory for valuable discussions on track sampling. Mr. Carl Quong and Miss Edna Williams wrote the computer programs, and Mr. John H. Wood developed the emulsions.

FOOTNOTES AND REFERENCES

*Work done under the auspices of the U. S. Atomic Energy Commision.

†Present address: Department of Biophysics and Nuclear Medicine, University of California, Los Angeles.

§ Present address: Department of Physics, University of Arizona, Tucson.

1. Walter H. Barkas, Nuclear Research Emulsions (Academic Press, New York, 1963), p. 458 ff., p. 438.
2. R. L. Lehman and O. M. Fekula, Energy Spectra of Stray Neutrons from the Bevatron, Nucleonics, in press (Nov. 1964).
3. William G. Simon, Neutron Spectra from Heavy Ion Bombardment of Gold (Ph.D. thesis), UCRL-11088, October 1963, p 9-10 (unpublished).
4. L. Rosen, Nuclear Emulsion Techniques for the Measurement of Neutron Energy Spectra, Nucleonics 11, 32-38, 38-44 (1953).
5. L. Stewart, Neutron Spectrum and Absolute Yield of a Plutonium-Beryllium Source, Phys. Rev. 98, 740-743 (1955).
6. H. T. Richards, A Photographic Plate Spectrum of the Neutrons from the Disintegration of Lithium by Deuterons, Phys. Rev. 59, 796-804 (1941).
7. H. Akagi and R. L. Lehman, Neutron Dosimetry by Use of Nuclear Track Emulsion, Health Phys. 9, 207 (1963).

Footnotes and References (cont'd)

8. R. L. Lehman and J. R. Wayland, Jr., Geometry Correction Factors for Proton-Recoil Track Samples Taken from Nuclear Emulsions, UCRL-11296, Feb. 1964 (unpublished).

9. V. J. Ashley and H. C. Catron, Tables of Nuclear Reaction Q-Values, Lawrence Radiation Laboratory Report UCRL-5419, Feb. 1959 (unpublished).

Table I. Details of neutron exposure.

Film no.	Reaction	Duration (min.)	Beam E (MeV)	Av. beam current (μA)	Neutron E at 0° (MeV)	Neutron exposure at 18 cm 0° ($n\ cm^{-2} x10^{-6}$)
A-18	$T(p,n)He^3$	45	1.93-1.95	6.5	1.02-1.06	48
A-20	$D(d,n)He^3$	165	0.46-0.50	5	3.07-3.13	28
A-21	$D(d,n)He^3$	26	2.00-2.02	4	4.9	88

Table II. Track data from nuclear emulsions.

Film no.	ℓ_m (μm)	n	Track density (10^6 cm^{-3}) Measured	Number of tracks scanned Total	30 deg Fraction
A-18	15	1.48	3.9	2868	1015
A-20	78	1.56	2.2	1591	483
A-21	170	1.58	4.5	2620	723

Table III. Tracks from natural alpha-emitters.

Emitter	Length (μ)*	Emitter	Length (μ)*
Ra^{226}	19	Ra^{224} (ThX)	25
Pu^{239}	21	Ra^{220} (Tn)	29
Th^{228}	23	Po^{214} (RaC')	40
Rn^{222}	24	Po^{212} (ThC')	48

*of alpha-particle tracks in Ilford L.4 emulsion.

FIGURE CAPTIONS

Fig. 1. Emulsion holder for edge-normal exposure.

Fig. 2. Geometry of edge-normal exposure. QV is path axis of incident neutron.

Fig. 3. Cross section of a piece of nuclear emulsion of thickness T cut normal to path axis of incident neutron. Geometry for edge-normal exposure when $\ell \sin \theta \leqslant T$.

Fig. 4. Cross section of a piece of nuclear emulsion of thickness T cut normal to path axis of incident neutron. Geometry for edge-normal exposure when $\ell \sin \theta \geqslant T$.

Fig. 5. Geometry correction factors for proton-recoil tracks in nuclear emulsion of thickness 600 μ.

I: maximum for face-normal exposure, $E_p = E_n$,

II: minimum for face-normal exposure, (E_n = 20 MeV),

III: isotropic exposure,

IV: maximum for edge-normal exposure, ($E_p = 0.75\ E_n$),

V: edge-normal exposure for $\theta = 15°$. ($E_p = 0.93\ E_n$).

Fig. 6. Track-length distribution in nuclear emulsion A-18: ——— expected; ●, full sample; □, 30-deg fraction.

Fig. 7. Track-length distribution in nuclear emulsion A-20: ——— expected; ●, full sample; □, 30-deg fraction.

Fig. 8. Track-length distribution in nuclear emulsion A-21: ——— expected; ●, full sample; □, 30-deg fraction.

Figure Captions (cont'd)

Fig. 9. Angular distribution of accepted tracks in A-18: ——— expected; □, xy plane; ●, zy plane.

Fig. 10. Angular distribution of accepted tracks in A-20: ——— expected; □, xy plane; ●, zy plane.

Fig. 11. Angular distribution of accepted tracks in A-21: ——— expected; □, xy plane; ●, zy plane.

Fig. 12. Neutron energy spectrum in nuclear emulsion A-18: ——— by differentiation of proton energy spectrum: —.—. from 30-deg fraction, track by track (RECOIL II).

Fig. 13. Macroscopic cross sections for neutron interactions in nuclear emulsion: I, total; II, elastic scattering; III, hydrogen; IV, (n, n'); V, (n, n') plus (n, 2n); R, ratio of III to II. For I, II, IV, V the ordinate is the sum of the macroscopic cross sections of Ag, Br, H, C, O, and N.

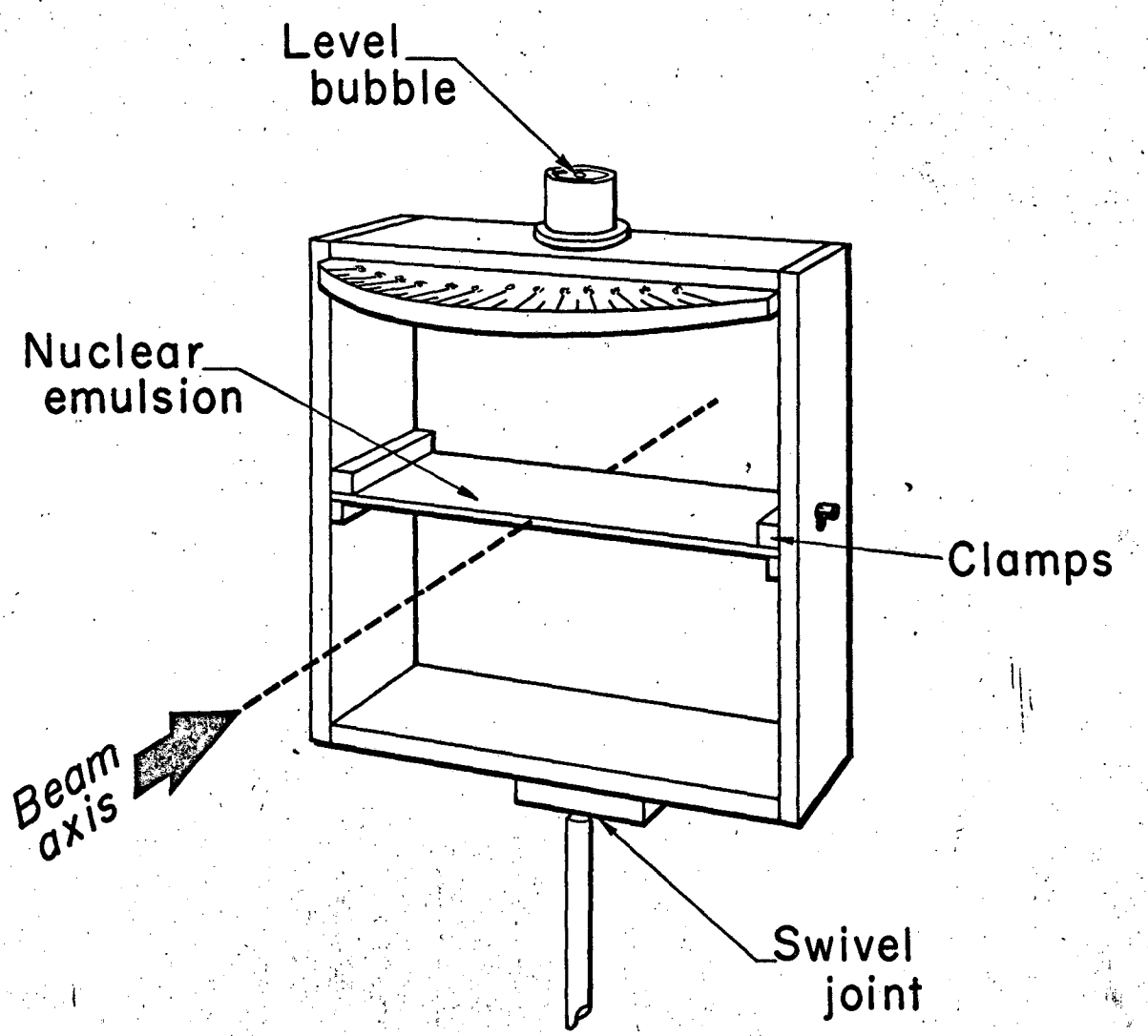

MUB-2496

Fig. 1

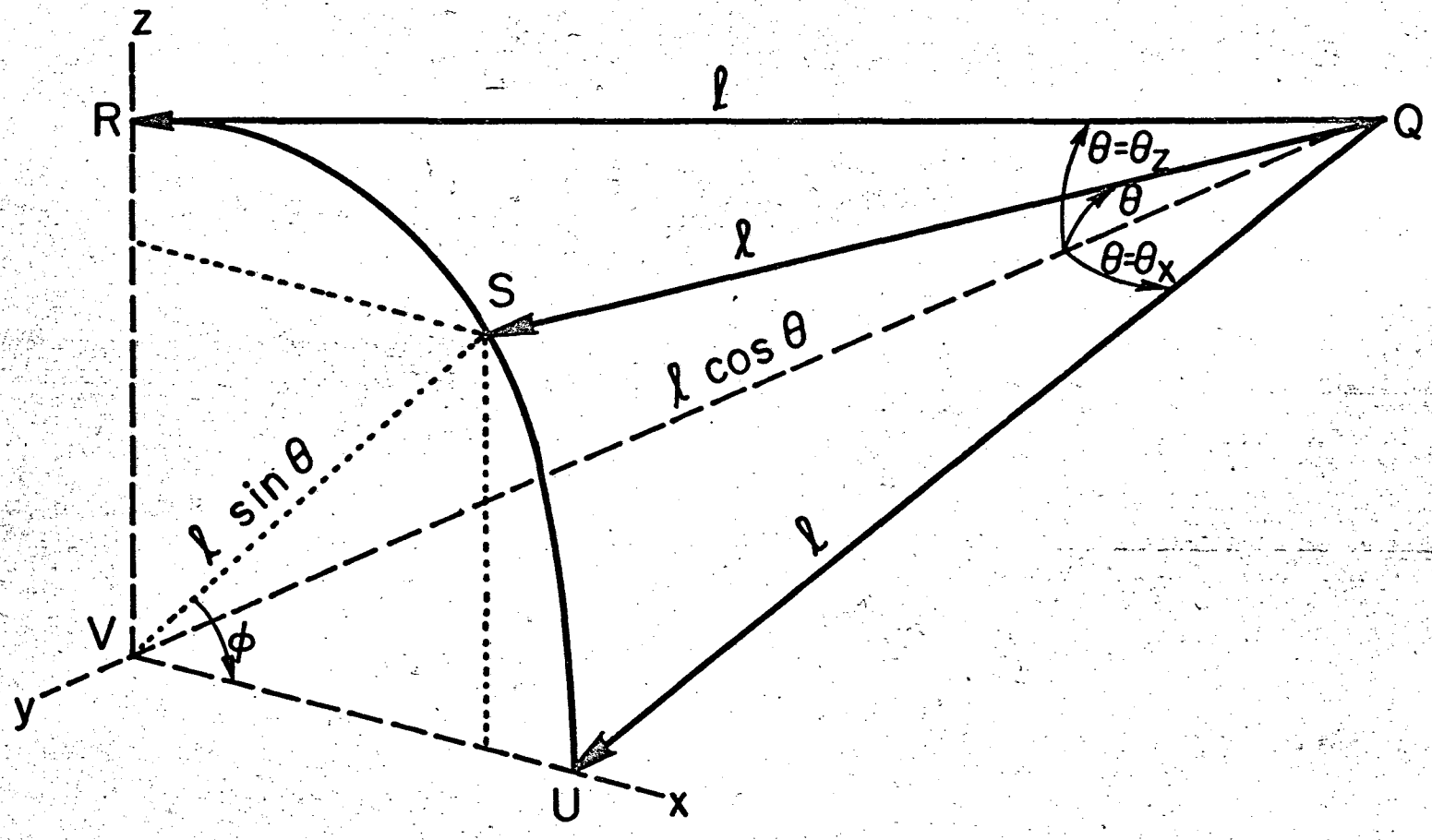

Fig. 2

MU-33417

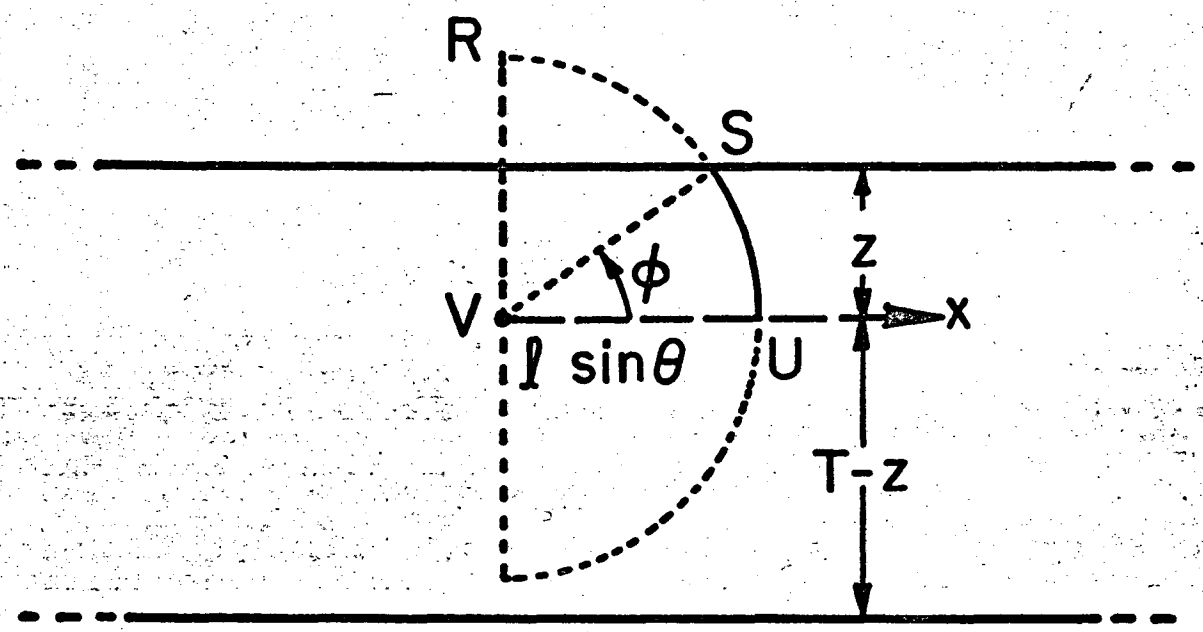

Fig.3

MU-33418

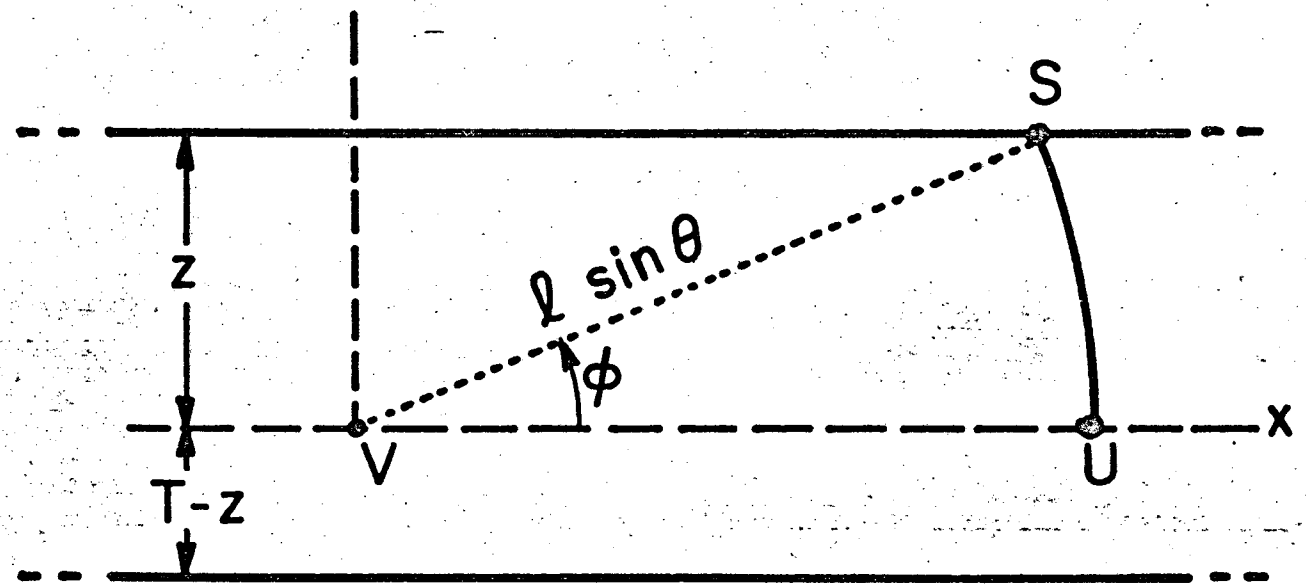

Fig. 4

MU-33419

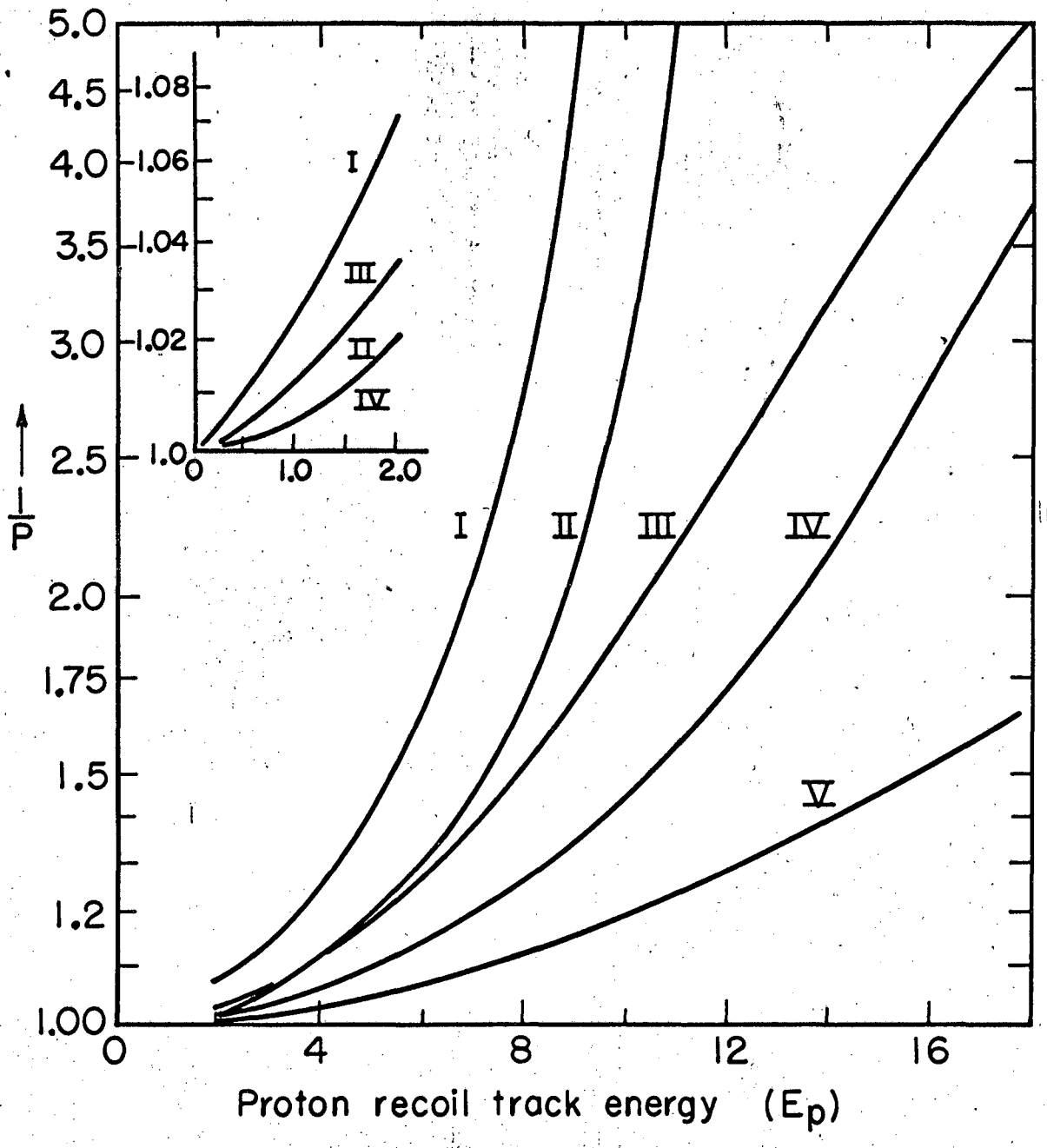

Fig. 5

MU-33420

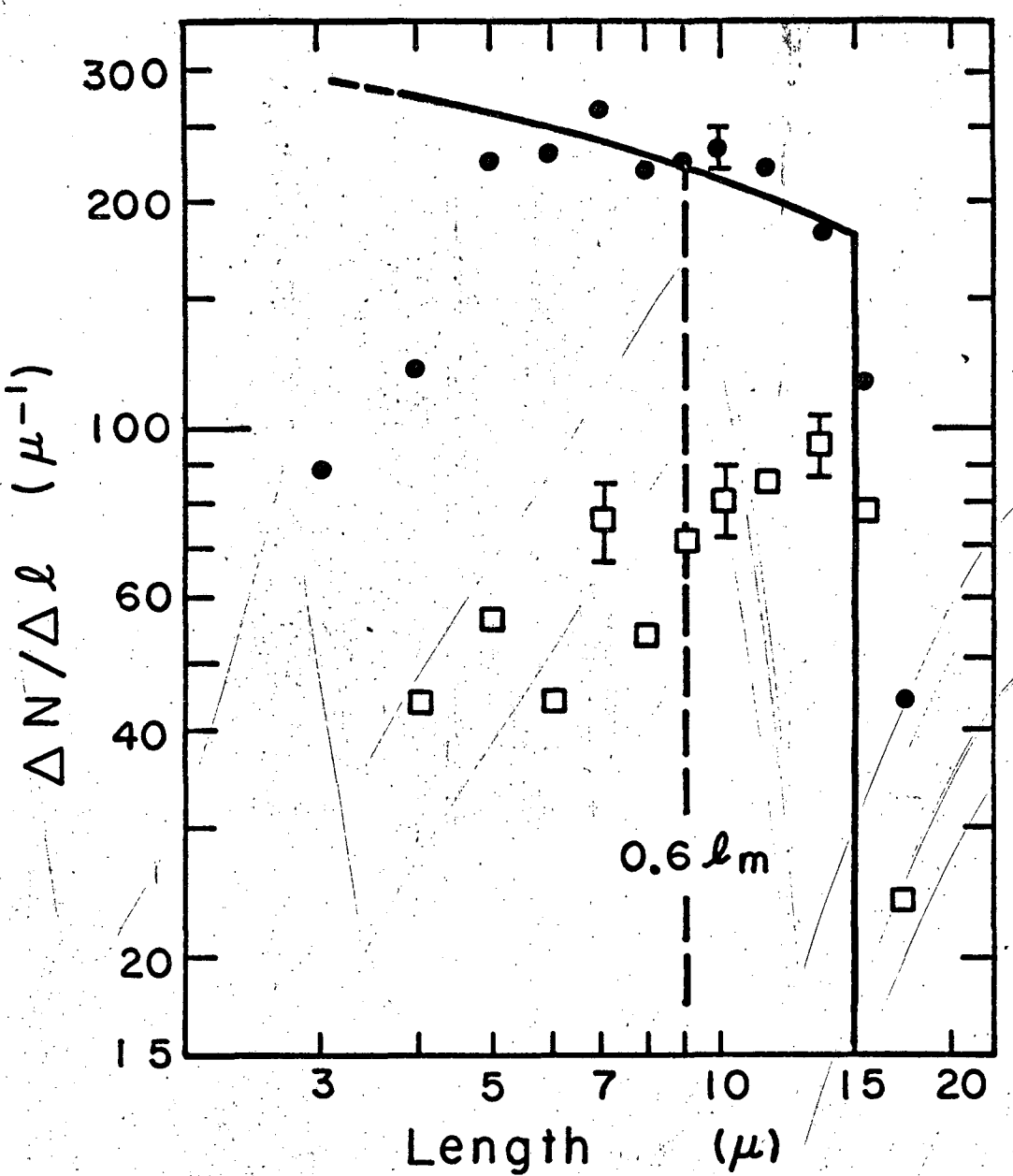

Fig. 6

MU-33759

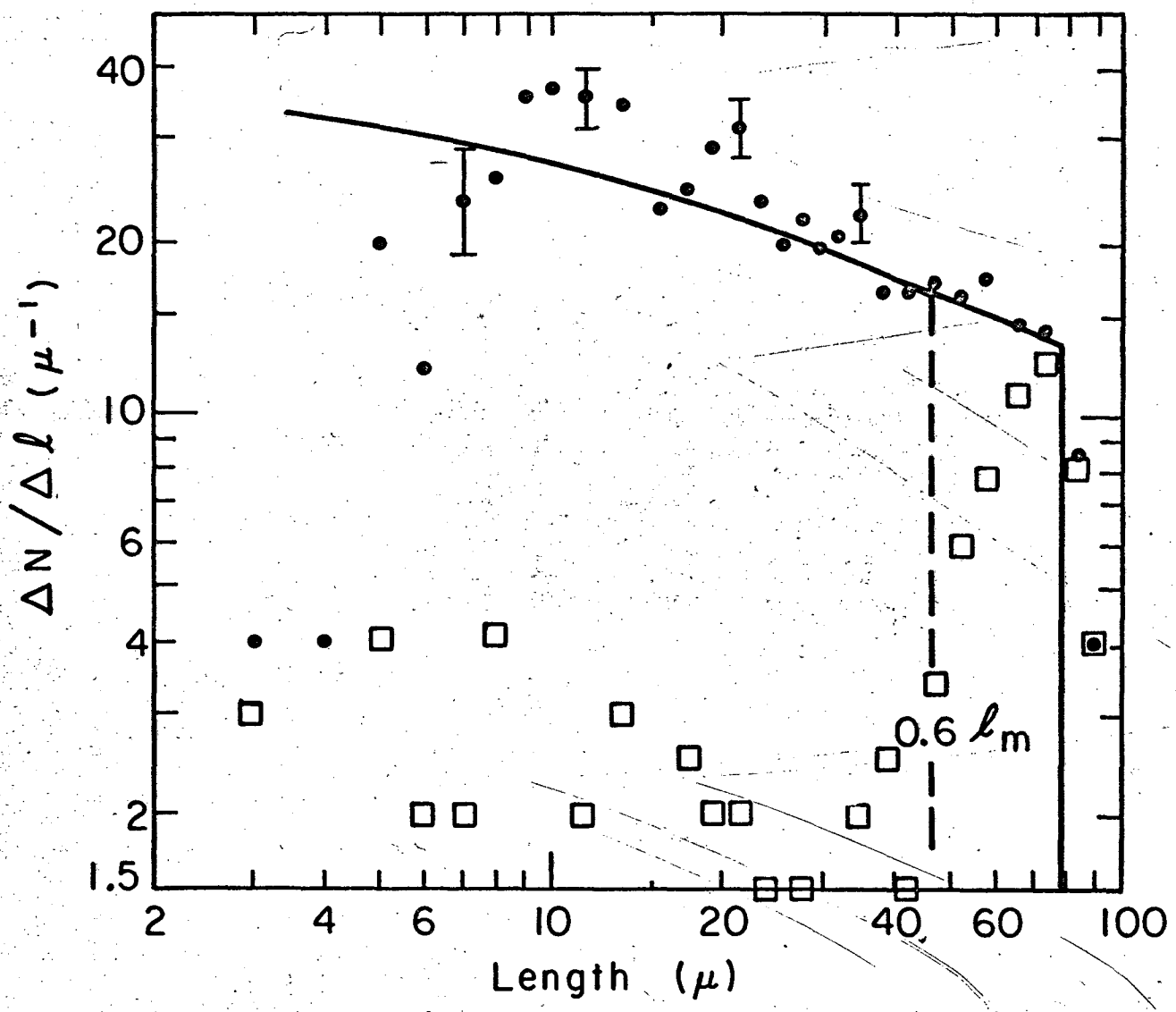

Fig. 7

MU-33760

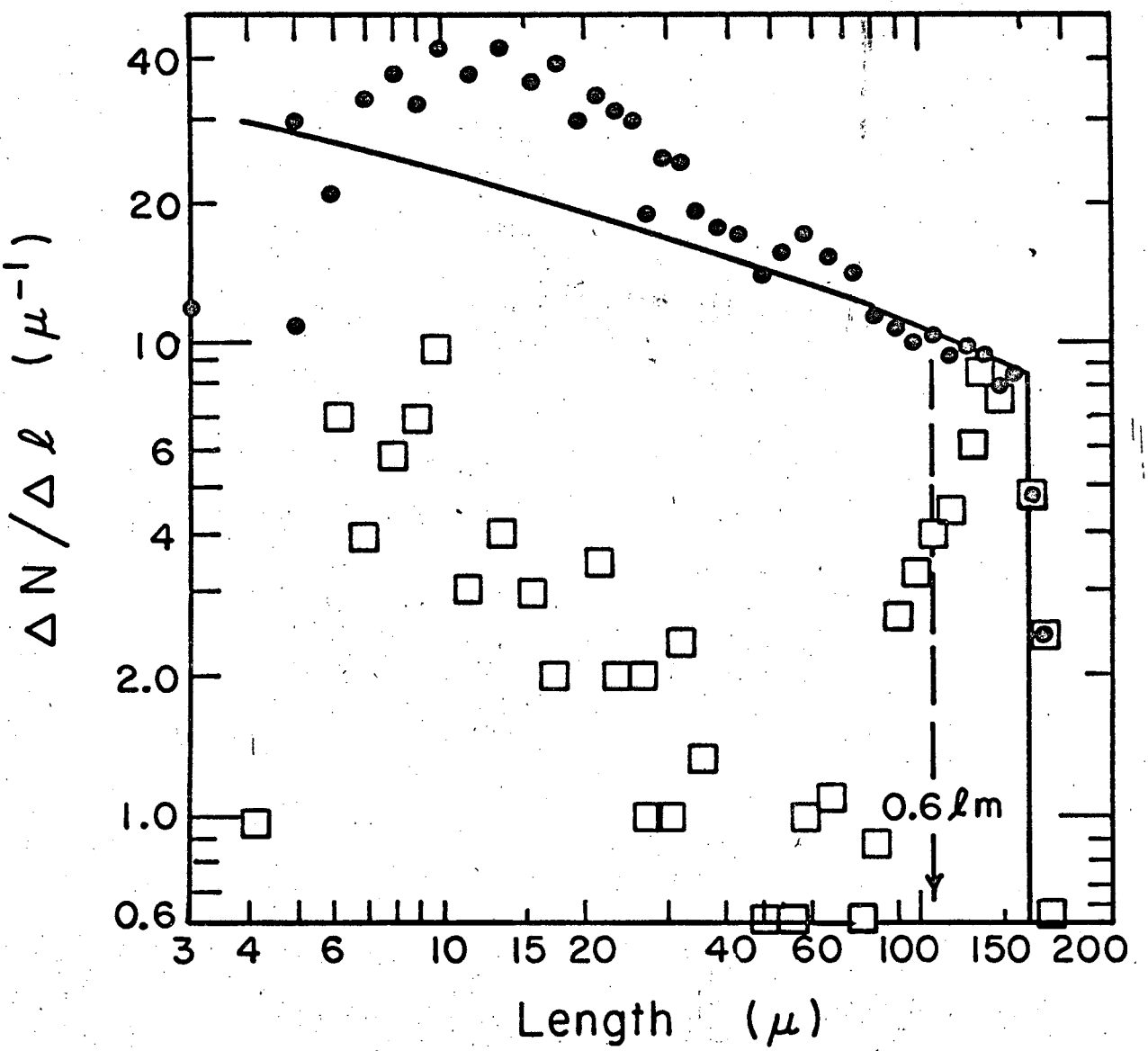

Fig. 8

MU-33776

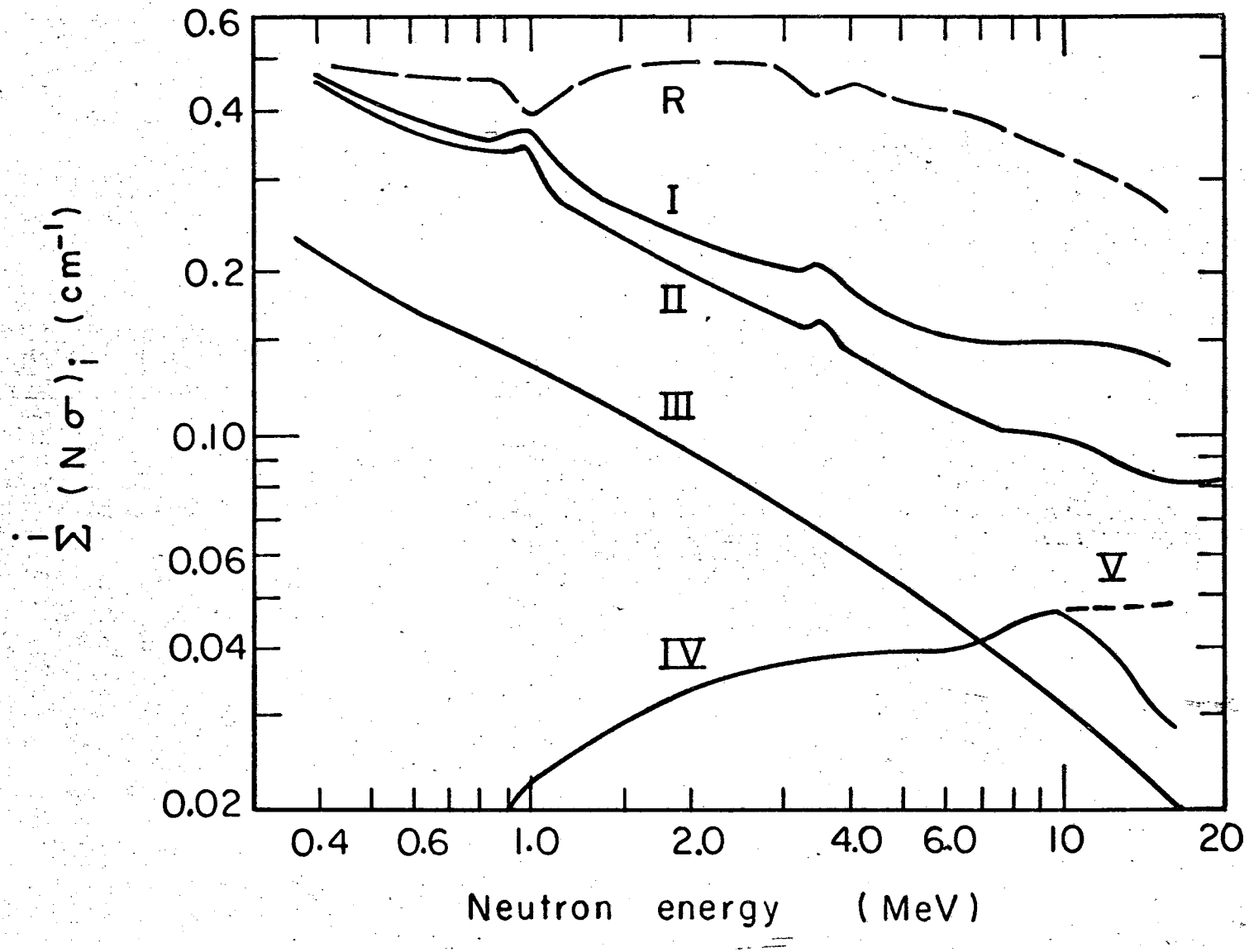

Fig. 9

MU-33774

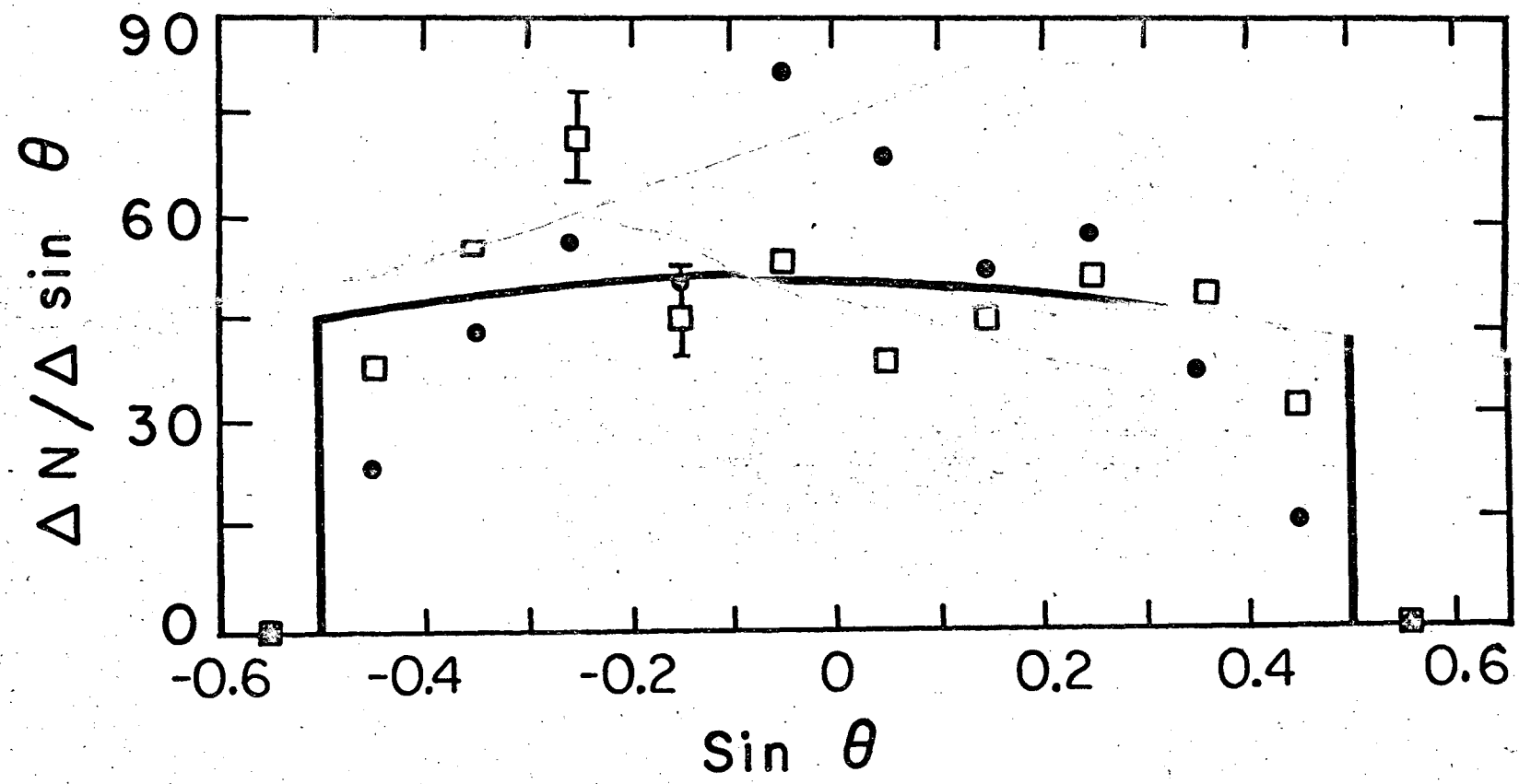

Fig. 10

MU-33766

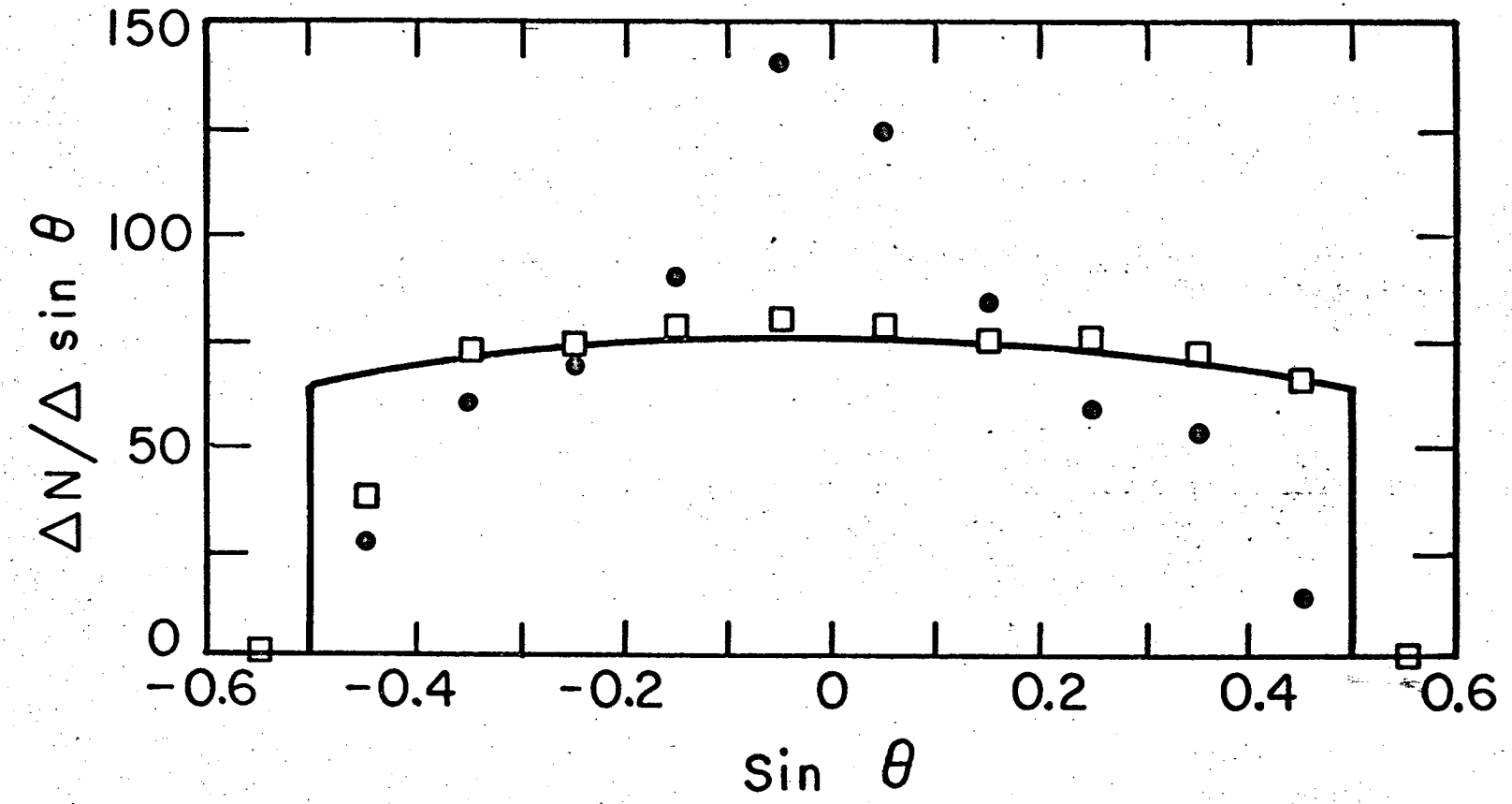

Fig. 11

MU-33765

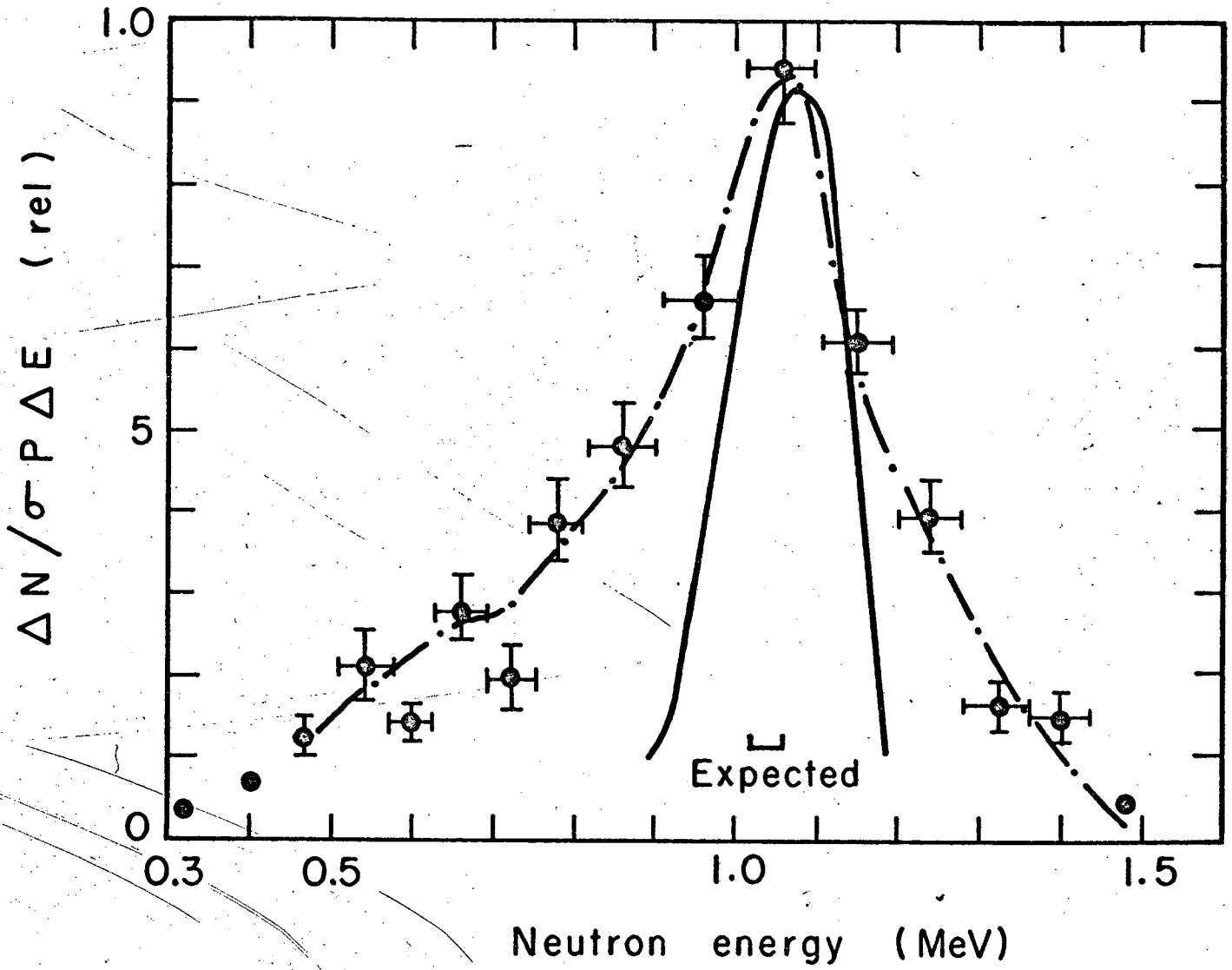

Fig. 12

MU-33770

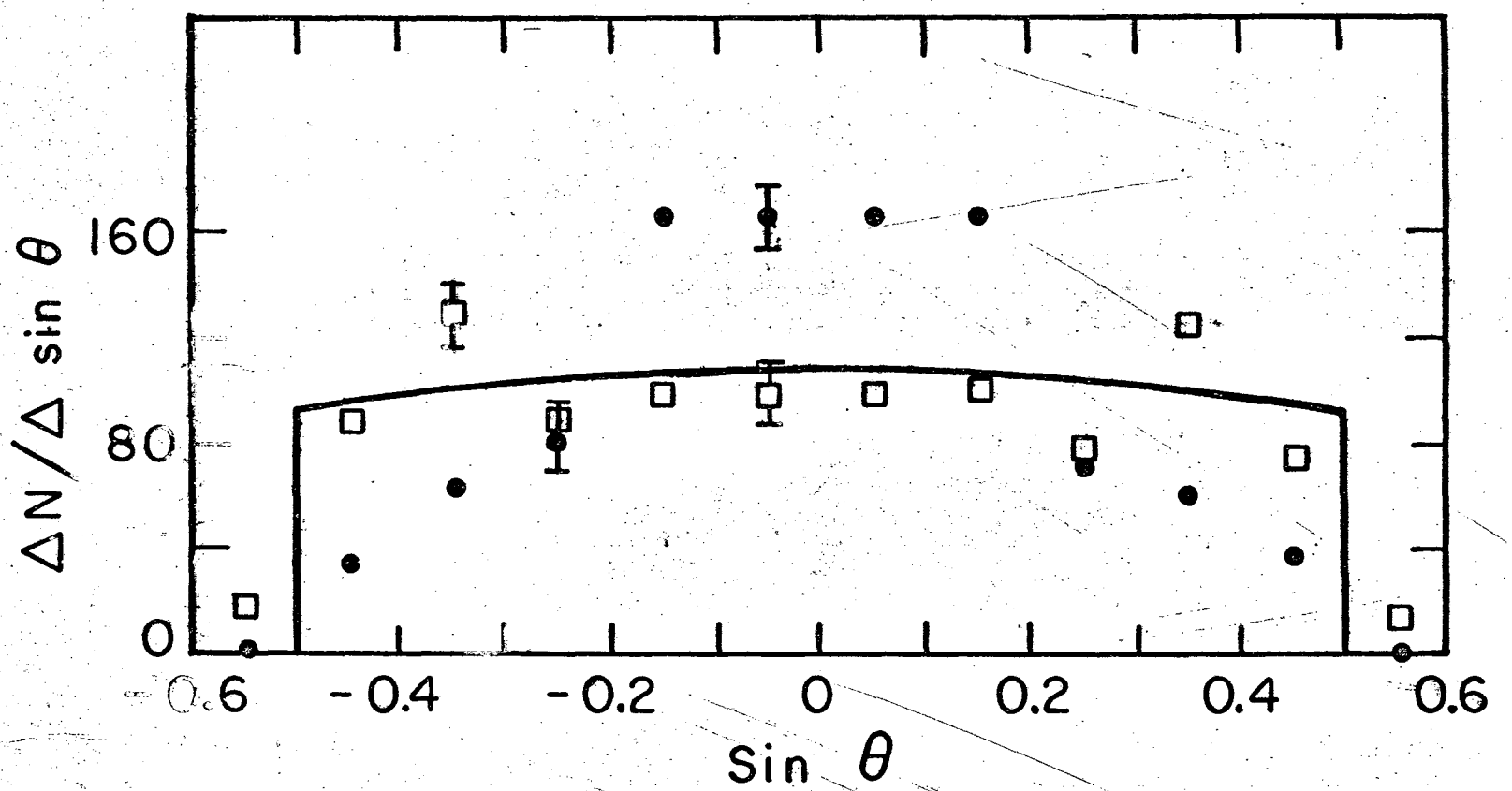

Fig. 13

MU-33764

This report was prepared as an account of Government sponsored work. Neither the United States, nor the Commission, nor any person acting on behalf of the Commission:

A. Makes any warranty or representation, expressed or implied, with respect to the accuracy, completeness, or usefulness of the information contained in this report, or that the use of any information, apparatus, method, or process disclosed in this report may not infringe privately owned rights; or

B. Assumes any liabilities with respect to the use of, or for damages resulting from the use of any information, apparatus, method, or process disclosed in this report.

As used in the above, "person acting on behalf of the Commission" includes any employee or contractor of the Commission, or employee of such contractor, to the extent that such employee or contractor of the Commission, or employee of such contractor prepares, disseminates, or provides access to, any information pursuant to his employment or contract with the Commission, or his employment with such contractor.