UCRL-11744 Rev.

University of California

Ernest O. Lawrence Radiation Laboratory

TWO-WEEK LOAN COPY

This is a Library Circulating Copy which may be borrowed for two weeks. For a personal retention copy, call Tech. Info. Division, Ext. 5545

ORDERED DOMAINS AND THE [redacted] RATIO OF $TA_{64}C$

Berkeley, California

DISCLAIMER

This document was prepared as an account of work sponsored by the United States Government. While this document is believed to contain correct information, neither the United States Government nor any agency thereof, nor the Regents of the University of California, nor any of their employees, makes any warranty, express or implied, or assumes any legal responsibility for the accuracy, completeness, or usefulness of any information, apparatus, product, or process disclosed, or represents that its use would not infringe privately owned rights. Reference herein to any specific commercial product, process, or service by its trade name, trademark, manufacturer, or otherwise, does not necessarily constitute or imply its endorsement, recommendation, or favoring by the United States Government or any agency thereof, or the Regents of the University of California. The views and opinions of authors expressed herein do not necessarily state or reflect those of the United States Government or any agency thereof or the Regents of the University of California.

UCRL-11744 Rev.

Applied Physics Letters

UNIVERSITY OF CALIFORNIA

Lawrence Radiation Laboratory
Berkeley, California

AEC Contract No. W-7405-eng-48

ORDERED DOMAINS AND THE $\frac{c}{a}$ RATIO OF $TA_{64}C$

R. Villagrana and G. Thomas

January 1965

ORDERED DOMAINS AND THE $\frac{c}{a}$ RATIO OF $TA_{64}C$

R. Villagrana and G. Thomas

Department of Mineral Technology, College of Engineering
University of California, Berkeley, California

Recent investigations suggest that interstitial elements produce ordering in BCC metals[1-5]. In the Ta-C system, in the solid solution ranges of carbon (less than 3 at. % C), a detailed diffraction analysis[3] has shown that the ordered structure can be described by Fig. 1. This structure corresponds to a composition $Ta_{64}C$ and is defined by the carbon atoms, whose positions relative to the "superlattice" unit cell are determined by body centered translations. The unit cell is not isometric, but tetragonal (Fig. 1), the carbon atoms occupy $0\frac{1}{2}0$ octahedral positions in the BCC tantalum unit cell, but it should be recognized that tetrahedral positions are equiprobable, the only difference being the location of the superlattice unit cell relative to the tantalum matrix.

Specimens were prepared from electron beam zone refined tantalum, and resistivity measurements showed these specimens to contain less than one impurity atom per 10^9 Ta atoms. The specimens were then doped with varying quantities of carbon and studied in the electron microscope, and in no case did the pure Ta specimens, which were subjected to the same treatment as the Ta-C samples, show any ordering transformation. As the superlattice was determined on the basis of thin foil transformations carried out in the microscope, it was necessary to compare the thin foil behavior with that of bulk specimens. The ordered structure corresponded to $Ta_{64}C$, and so the bulk specimens were alloyed to

correspond to this composition, and contained 1.54 at. % C. Microscopic examination of this specimen, Fig. 2, showed a multitude of domain boundaries.

A detailed dynamical theory explaining the contrast, and the basic crystallographic conditions necessary for contrast have been developed by Gevers et al.[4,5]. The domain boundaries of Fig. 2 correspond to overlapping or stacked boundaries. The planes of the various boundaries are indexed in Fig. 2.

The existence of tetragonality can be found from the diffraction pattern particularly if the c axis lies (almost) parallel to the foil surface, on one-half of the boundary and normal to the surface in the other half, because then the diffraction maxima lying parallel to the c axis are paired.

Further, a diffraction pattern taken across a domain wall will show paired Kikuchi lines, as well as split relpoints. From this splitting of the relpoints it is possible to find the degree of tetragonality induced by ordering, but greater accuracy is obtained using paired Kikuchi lines.

If the angle between a {100} relpoint and an $(hk\ell)_c$ cubic relpoint is θ, and the angle between the $(hk\ell)_c$ relpoint and the $(hk\ell)_T$ tetragonal relpoint is $\Delta\theta$, then the angle between the {100} relpoint and the $(hk\ell)_T$ relpoint is $\phi = \theta + \Delta\theta$. Substituting into the equation for the angle between two planes in a tetragonal structure:

$$\cos \phi = \frac{\dfrac{h_1 h_2 + k_1 k_2}{a^2} + \dfrac{\ell_1 \ell_2}{c^2}}{\left[\left(\dfrac{h_1^2 + k_1^2}{a^2} + \dfrac{\ell_1^2}{c^2}\right)\left(\dfrac{h_2^2 + k_2^2}{a^2} + \dfrac{\ell_2^2}{c^2}\right)\right]^{\frac{1}{2}}}$$

it is possible to calculate the $\frac{c}{a}$ ratio for the ordered structure directly. $\Delta\theta$ is obtained from paired Kikuchi lines, as it is more accurate to work with Kikuchi lines rather than relpoints when carrying out diffraction and contrast analysis[6].

Figure 3a is the diffraction pattern taken across the $(1\bar{1}0)$ vertical domain boundary in Fig. 2. Although it is difficult to see the paired Kikuchi lines on the print (measurements are made from the plate), the split spots are immediately apparent particularly at $4\bar{2}0$ and $3\bar{3}2$. Figure 3b is a sketch of this pattern and from the paired Kikuchi lines from this and other patterns the calculated $\frac{c}{a}$ ratio is 1.128. A hard sphere model based on Fig. 1 gives $\frac{c}{a} = 1.08$, but this value is low because the contraction along the a_s axes is neglected.

This work was done under the auspices of the United States Atomic Energy Commission, through the Inorganic Materials Research Division of the Lawrence Radiation Laboratory.

References

1. D. Seraphim, N. Stemple and D. Novick, J. Appl. Phys., 33, 136 (1962).

2. L. I. Van Torne and G. Thomas, Acta Met., 12, 601 (1964).

3. R. Villagrana and G. Thomas, to be published.

4. R. Gevers, P. Delavignette, H. Blank and S. Amelinckx, Phys. Stat. Sol. 4, 383 (1964).

5. R. Gevers, P. Delavignette, H. Blank, J. Van Landuyt and S. Amelinckx, Phys. Stat. Sol. 5, 595 (1964).

6. G. Thomas, to be published (Trans. AIME), see also UCRL Report #11751.

Figure Captions

Figure 1 Structure of the $Ta_{64}C$ superlattice. The subscripts s refer to the superlattice cell where $a_s = 4a_o \neq c_s$. a_o is the unit cell length of tantalum (BCC). The circles represent carbon atoms at $\langle 0\frac{1}{2}0 \rangle$ defining a BCT cell.

Figure 2 Domain boundaries in Ta - 1.5 at. %C after annealing 24 hrs. at 1000°C. Foil prepared from annealed bulk specimen, orientation $[\bar{2}4\bar{3}]$.

Figure 3 a) Diffraction pattern from Figure 2 showing paired spots and Kikuchi lines.

b) Analysis of the pattern in (a).

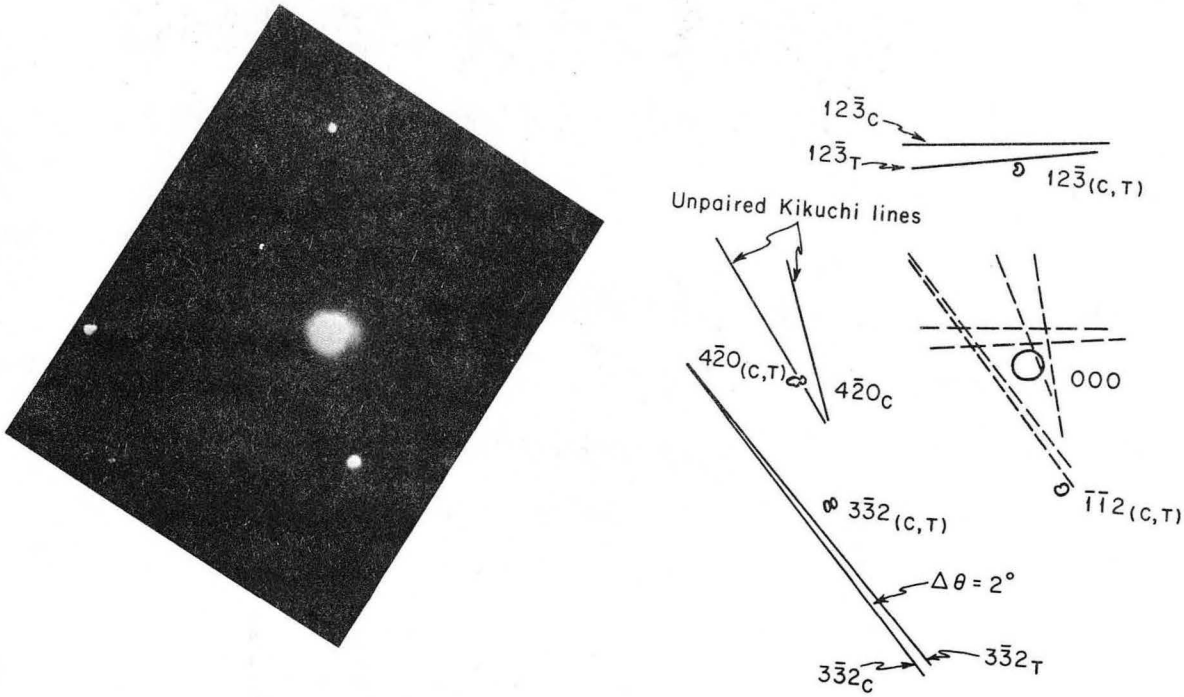
$12\bar{3}_C$
$12\bar{3}_T$
$12\bar{3}_{(C,T)}$
Unpaired Kikuchi lines
$4\bar{2}0_{(C,T)}$
$4\bar{2}0_C$
000
$\bar{1}\bar{1}2_{(C,T)}$
$3\bar{3}2_{(C,T)}$
$\Delta\theta = 2°$
$3\bar{3}2_C$
$3\bar{3}2_T$

ZN-4595

Fig. 1

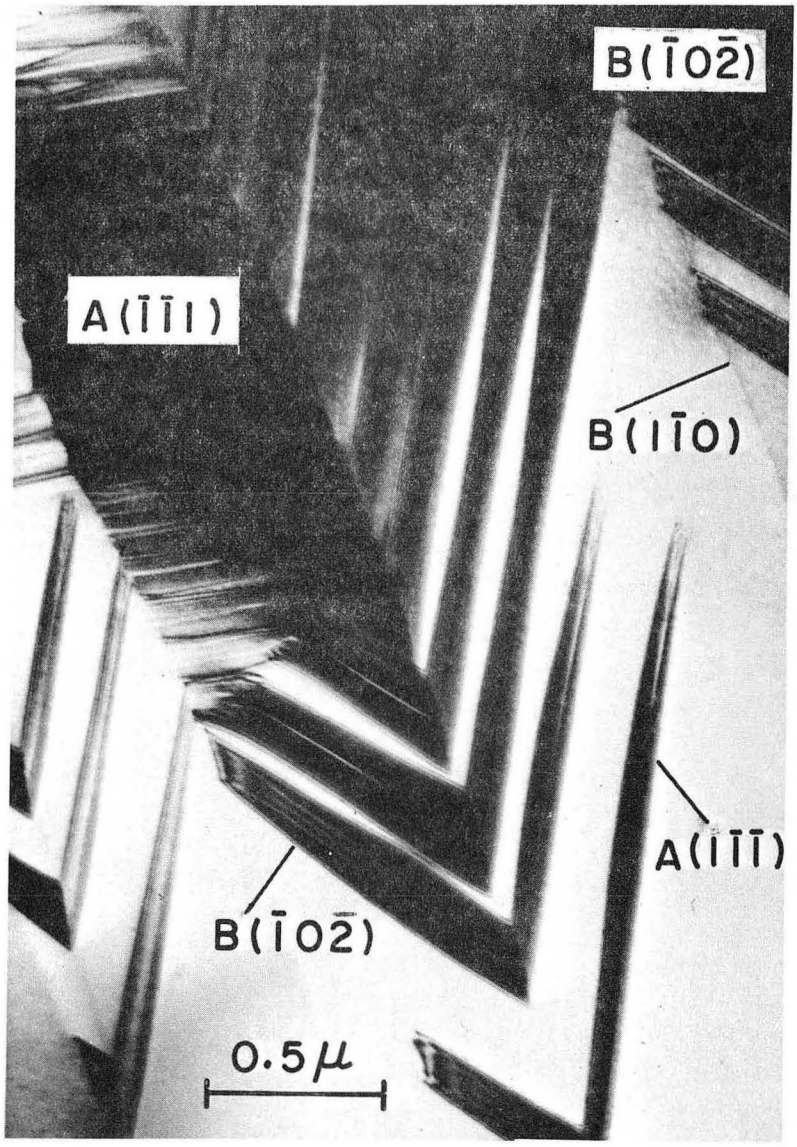

ZN-4556

Fig. 2

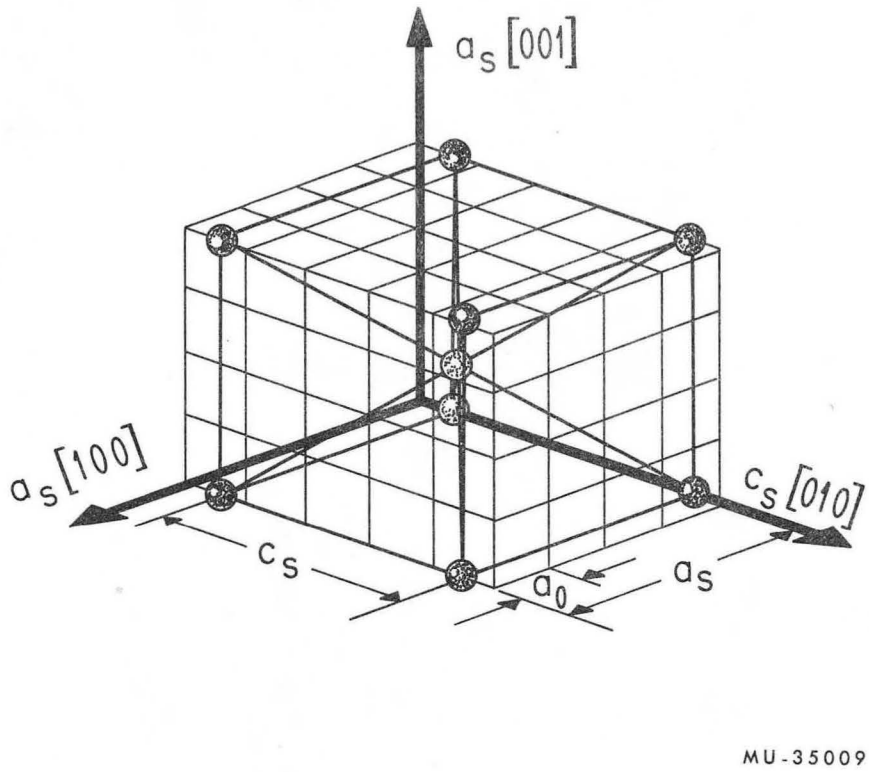

Fig. 3

This report was prepared as an account of Government sponsored work. Neither the United States, nor the Commission, nor any person acting on behalf of the Commission:

A. Makes any warranty or representation, expressed or implied, with respect to the accuracy, completeness, or usefulness of the information contained in this report, or that the use of any information, apparatus, method, or process disclosed in this report may not infringe privately owned rights; or

B. Assumes any liabilities with respect to the use of, or for damages resulting from the use of any information, apparatus, method, or process disclosed in this report.

As used in the above, "person acting on behalf of the Commission" includes any employee or contractor of the Commission, or employee of such contractor, to the extent that such employee or contractor of the Commission, or employee of such contractor prepares, disseminates, or provides access to, any information pursuant to his employment or contract with the Commission, or his employment with such contractor.