UCRL-11783
c. 2

A 600-kV, 10-mA dc COCKCROFT-WALTON RECTIFIER USING SILICON DIODES AT 100 kc

Louis L. Reginato and Bob H. Smith

March 2, 1965

RECEIVED
OFFICE
LABORATORY
JUN 13 1975
LIBRARY AND
DOCUMENTS SECTION

TWO-WEEK LOAN COPY

This is a Library Circulating Copy which may be borrowed for two weeks. For a personal retention copy, call Tech. Info. Division, Ext. 5545

LAWRENCE BERKELEY LABORATORY
UNIVERSITY OF CALIFORNIA
BERKELEY

UCRL-11783
c. 2

DISCLAIMER

This document was prepared as an account of work sponsored by the United States Government. While this document is believed to contain correct information, neither the United States Government nor any agency thereof, nor the Regents of the University of California, nor any of their employees, makes any warranty, express or implied, or assumes any legal responsibility for the accuracy, completeness, or usefulness of any information, apparatus, product, or process disclosed, or represents that its use would not infringe privately owned rights. Reference herein to any specific commercial product, process, or service by its trade name, trademark, manufacturer, or otherwise, does not necessarily constitute or imply its endorsement, recommendation, or favoring by the United States Government or any agency thereof, or the Regents of the University of California. The views and opinions of authors expressed herein do not necessarily state or reflect those of the United States Government or any agency thereof or the Regents of the University of California.

Submitted for presentation in the
Particle Accelerator Conf.
Washington, Mar. 10-12, 1965.

Submitted for publi. in Proceedings

UCRL-11783

c.2

UNIVERSITY OF CALIFORNIA

Lawrence Radiation Laboratory
Berkeley, California

AEC Contract No. W-7405-eng-48

A 600-kV, 10-mA dc COCKCROFT-WALTON RECTIFIER USING SILICON DIODES AT 100 kc

Louis L. Reginato and Bob H. Smith

March 2, 1965

A 600-kV, 10-mA dc COCKCROFT-WALTON RECTIFIER USING SILICON DIODES AT 100 kc*

Louis L. Reginato and Bob H. Smith

Lawrence Radiation Laboratory
University of California
Berkeley, California

March 2, 1965

Abstract

In this rectifier high-speed silicon diodes, etched circuit boards, and SF_6 are combined in a style of construction that requires only the modest shop facilities of any typical small physics laboratory. This paper covers construction techniques, performance tests, electronic regulation, high-speed protection circuitry, and application of the rectifier to experimental equipment. The technique described can be extended to larger sizes providing several million volts.

Introduction

Many laboratories need reasonably inexpensive, simply constructed power supplies at voltages of the order of 500 kV at currents of 10 mA. In the past such power supplies have been built from selenium rectifiers operating from low-frequency power sources[1,2] or vacuum tubes operating at high frequencies.[3,4] Such supplies require so much engineering and machine work that they are beyond the capabilities of most laboratories. Recent improvements in silicon diodes and ceramic capacitors make possible a much simpler style of construction.

The power supply described in this paper was built for ion-source research at the Lawrence Radiation Laboratory's heavy-ion linear accelerator, using only modest shop facilities. It is an 18-stage (9-deck) Cockcroft-Walton rectifier[5-7] driven by 40 kV ac from a 100-kc, 10-kW oscillator and produces 600 kV at a load current of 10 mA. The output voltage of the rectifier is regulated by modulating the oscillator plate and screen voltages (see Figs. 1 and 2). A thyratron crowbar operating on the oscillator screen grid protects the power supply from damage during sparkdowns.

Rectifier

Each rectifier stage consists of 350 Unitrode 0.75A, 600 piV, type-UT 71, silicon diodes connected in series and mounted on an 18-in.-diam etched circuit board. Each diode is shunted by a 250-pF, 500-V ceramic capacitor to equalize the diode inverse voltages. The diodes are mounted under the shunting capacitor in order to reduce the gradient between boards, and are arranged in a pattern which minimizes the gradient across the board (see Fig. 3). The diode boards are mounted in a zig-zag pattern connected together at the junction points of the capacitors (see Fig. 4). The mounting tabs are made of 1/8-in.-thick aluminum with edges rounded to reduce gradient magnification. Adjacent stages are connected through two Sprague-type 710C7, 2500-pF, 40-kV capacitors in series. The assembly of diode boards and between-deck capacitors is placed in a polyvinyl acetate cylinder measuring 47 in. long by 18 in. i.d., with a 3/8-in.-thick wall. The end covers of the housing are made of 1-in.-thick NEMA G7 material and sealed to the polyvinyl acetate cylinder with rubber O rings. The end caps contain vacuumtight electrical connections to the rectifier, valves for filling the structure with sulfur hexafluoride (SF_6) and on the inside, mountings for 5-in.-diam 1/2-in.-thick packets of activated alumina.[8] After assembly the unit was filled with SF_6 at atmospheric pressure.[9] Tests on SF_6 indicated that its dielectric strength is 2.5 to 3 times that of air. A 24-in.-diam corona ball terminates the high voltage end of the rectifier.

The Oscillator

The oscillator consists of an Eimac 4CW10,000 operating in a Colpitts circuit (see Figs. 5 and 6). The operating conditions are shown in Table I:

Table I.

Oscillator operating parameters

dc plate voltage	7.5kV
dc screen voltage	500V
dc grid voltage	-350V
dc plate current	2.8A
dc screen	0.5A
dc grid	0.25A
Peak rf grid voltage	590V
Driving power (self excited)	150W
Plate dissipation	5kW
Output power	16kW

The 40-kV output voltage is obtained by an appropriate choice of the turn ratio between the primary and secondary of the tuned circuit. The coil, which has an inductance of 6.3 mH, was designed to resonate at 100 kc with 400 pF of capacity (two Jennings-type CHFA200 capacitors in parallel). It consists of 216 turns of No. 14

*This work was performed under the auspices of the United States Atomic Energy Commission.

enameled copper wire wound on a 10-in.-diam bakelite cylinder. The dissipation is 220 W, or about 0.5 W per square inch of surface. It is cooled by forced air obtained from the pressurized under side of the oscillator chassis. The primary consists of 38 turns of No. 14 wire. To protect the rectifier during sparkdowns, a 5557 thyratron crowbar is used to remove screen voltage and stop oscillation. The crowbar signal is derived from a 90-ohm resistor in the ground return of the rectifier. An overcurrent relay provides slow-speed protection.

Modulator

The oscillator output voltage is controlled by the plate and screen modulators (see Fig. 7). The plate modulator consists of an Eimac 3CW20,000 driven by a 4PR1000. The screen modulator consists of an Eimac 304TL. It is driven from a compensated voltage divider at the output of the plate modulator.

Regulator Reference and Voltage Divider

The voltage reference, regulator, and voltage divider for this system were very similar to those used by Smith.[10]

Test Load

We decided to check the performance of the rectifier against the Cockcroft-Walton output-voltage formula. To obtain a variable load, we used low-conductivity water (LCW) in a closed system. The system consisted of two 5/8-in.-diam polyethylene hoses wound in a 6-turn spiral inside a 6-in.-i.d. lucite tube. One hose served as the supply and the other as the return hose. The water contacted the top of the rectifier by passing through a short section of copper pipe which was tied to the aluminum corona ball. The load was varied in discrete steps by adding small amounts of salt to the LCW. A pump circulated the water through a heat exchanger to keep the temperature constant. Since some corona associated with our load occurred above 400 kV, we limited our measurement to that voltage (see Fig. 8).

Sample Calculations and Experimental Verification

The output voltage of a Cockcroft-Walton rectifier is given by[1, 11]

$$V_{dc} = \frac{V_0}{\left(\frac{C_s}{C}\right)^{1/2}} \tanh\left[n\left(\frac{C_s}{C}\right)^{1/2}\cos\theta_1\right] - \left(\frac{n^3}{12}+\frac{3n^2}{16}\right)\frac{i_{dc}}{fC},$$

where V_{dc} is the output voltage, n is the number of stages, which is twice the number of decks (doubler: n = 2; quadrupler: n = 4), V_0 is the peak value of the ac driving voltage, C_s is the stray capacitance per stage, C is the capacitance per stage, i_{dc} is the output current, and f is the frequency of the ac driving voltage. The first term on the right is the open-circuit voltage, and the second term is the voltage drop produced by load current. $\cos\theta_1$ in the first term represents the efficiency of rectification; for silicon diodes the series resistance is negligible, and the shunt resistance is essentially infinite so that θ_1 is zero. The first term

$$\frac{V_{dc}}{n\,V_0} = \frac{\tanh\left[n(C_s/C)^{1/2}\right]}{n\,(C_s/C)^{1/2}}$$

is plotted as a function of C_s/C in Fig. 9. The second term

$$\frac{\Delta V}{n\,V_0} = \left(\frac{n^2}{12}+\frac{3n}{16}\right)\frac{2\pi i_{dc}}{i_{ac}}$$

is plotted as a function of normalized dc output current, i_{dc}/i_{ac}, in Fig. 10, where we have $i_{ac} = 2\pi f\,CV_0$.[12]

The stray capacitance consists of two components: (a) the inverse-voltage-dividing capacitance shunting the diodes and (b) the stray capacitance between the two capacitor columns. Each of the 350 diodes per board is shunted by 250 pF. The capacitance per stage is $C_{s1} = 250/350 = 0.7$ pF. The two columns of between-deck capacitors, treated as a transmission line have a characteristic impedance[13] of $Z_0 = 276 \log 2D/d = 280$ ohm. The capacitance per meter is $C = 1/Z_0 v = 12$ pF/m. Since the length is 47 in., the capacitance stage is $C_{s2} = (12/18)(47/39) = 0.8$ pF. The total stray capacitance per stage is $C_s = 0.8 + 0.7 = 1.5$ pF. The efficiency factor, C_s/C, is $= 1.5/1250 = 0.0012$. From the curves of Fig. 9 we find that for n = 18, $V_{dc}/nV_0 = 0.88$ $V_{dc} = (0.88)\ 18\ V_0$.

Example

From Fig. 10 we see that for a load current of 5 mA, $V_{dc} = 270$ kV, $i_{ac} = 2\pi\times 10^5\,(1250\times 10^{-12})\,20\times 10^3 = 15.7$ A, $i_{dc}/i_{ac} = (5/15.7)\times 10^{-3} = 0.000318$, and $\Delta V/nV_0 = 0.07$, with $\Delta V = (0.07)18\times 220\times 10^3$, $\Delta V_1 = 25$ kV, $\Delta V_D = 3.5$ kV (diode voltage drop), and $\Delta V_T = 28.5$ kV. The experimental results (Fig. 8, 20-kV curve) show

$$\Delta V = 32 \text{ kV}.$$

The results indicate that there is good agreement between the experimental measurements and the theoretical calculations. The measured rate of decrease in output voltage with current agrees quite well with the calculated values.

The ripple voltage of the rectifier can be calculated from

$$\delta E = V_0\left[1 - \frac{1}{\cosh\left[n\left(\frac{C_s}{C}\right)^{1/2}\right]}\right] + \left[\frac{n^2}{8}+\frac{n}{4}\right]\frac{i_L}{fC}$$

Inserting values for the parameters we have

$$\delta E = 40\left\{1 - \frac{1}{\cosh\left[18(0.0012)^{1/2}\right]}\right\} + \left[\frac{324}{8}+\frac{18}{4}\right]\frac{i_L}{10^5(1250)\,10^{-12}} = 10.2 \text{ kV}.$$

The percent ripple is $(10.2/600) \times 100 = 1.7\%$.

Applications

The geometrical simplicity of this style of construction lends itself extremely well to many experimental facilities. Figure 11 shows a 12-stage, 400-kV rectifier built into an ion-source test facility. The gradient rings of the accelerating column and of the pump-down column are connected to the dc points of the rectifier. The 100-kc oscillator and the modulators are located outside the cage. The radiofrequency drive is connected to the bottom of the rectifier stack by means of RG19/U coaxial cable. The whole assembly can be moved through a 10-deg arc with respect to the ion source in order to obtain the best accelerating angle.

Based on the experience in building the 600-kV rectifier, it seems that the same technique can be extended to rectifiers of several million volts. Preliminary studies indicate that a 2.1-MV unit at 10 mA can be built by using 32 stages and a driving voltage of 80 kV.[14] The rectifier boards would be 32 in. in diameter and would contain 650 diodes. The current capabilities of such a rectifier could easily be doubled if higher currents were desired.

Acknowledgment

This work was coordinated by Matthew Renkas and Spencer Knoll. The rectifier boards were assembled by the operating crew. Final soldering of the boards and oscillator assembly were by John Noble. The system was installed by the installation crew under the direction of James Barley. The installed system was checked by the electronics maintenance group under the direction of James Johnston. The mechanical design is by Charles Corum.

References

1. F. Voelker, "Design of 502-kV Cockcroft-Walton," Lawrence Radiation Laboratory Engineering Note UCID-920, November 1954.

2. W. R. Arnold, "500-kV Cockcroft-Walton Using Selenium Rectifiers," Rev. Sci. Instr. 21, 796 (1950).

3. P. Lorrain, "On the Design of a Radio-Frequency Cockcroft-Walton Accelerator," Rev. Sci. Instr. 20, 216 (1949).

4. P. Lorrain, R. Béique, P. Gilmore, P.-E. Girard, A. Breton, and P. Piché, Can. J. Phys. 35, 299 (1957).

5. N. Greinacher, "High Voltage DC Generator," Bull. Schweiz. Elek. Ver. 11, 59 (1920).

6. J. D. Cockcroft and E. T. S. Walton, "Experiments with High Velocity Positive Ions," Proc. Roy. Soc. (London) A 129, 477 (1930).

7. J. D. Cockcroft and E. T. S. Walton, "Further Developments in the Method of Obtaining High Velocity Ions, 800 kV," Proc. Roy. Soc. (London) A 136, 619 (1932).

8. Anon., "Activated and Catalytic Alumina," Aluminum Company of America, 1501 Alcoa Building, Pittsburgh 19, Pennsylvania.

9. Anon., "Sulfur Hexafluoride for Gaseous Insulation," Baker and Adamson, General Chemical Division, 40 Rector St., New York 6, New York.

10. Bob H. Smith, "Deflector Power Supply for Sector-Focused Cyclotrons," Lawrence Radiation Laboratory Report UCRL-10655, March 1963.

11. E. Everhart and P. Lorrain, "The Cockcroft-Walton Voltage Multiplying Circuit," Rev. Sci. Instr. 24, 221 (1953).

12. Bob H. Smith, "A Universal Design Chart for Cockcroft-Walton Rectifiers Employing Silicon Diodes," Lawrence Radiation Laboratory Engineering Note UCID-2160, March 30, 1964.

13. F. E. Terman, Radio Engineers Handbook (McGraw-Hill, New York, N. Y., 1943), p. 174.

14. B. H. Smith and W. Dexter, "Two-Megavolt Cockcroft-Walton Rectifier, Preliminary Design," Lawrence Radiation Laboratory Engineering Note EET-1007, June 19, 1964.

FIGURE LEGENDS

Fig. 1. Overall schematic of 600-kV Cockcroft-Walton power supply.

Fig. 2. Schematic diagram of Cockcroft-Walton rectifier. The rf voltage can be supplied from either end, so that either positive or negative outputs can be obtained. C_1: 2500-pF 40-kV, Sprague-type 710C7; C_2: 250-pF 500-V, ceramic. Diodes: 600 piV, 750 mA, UT-71.

Fig. 3. Printed-circuit board showing diode pattern arranged to minimize the voltage gradient across the board. The diodes are located under the capacitors, and at the circular cut-out the boards are connected to the between-deck capacitors.

Fig. 4. Rectifier assembly showing details of construction. The assembly is sealed in a polyvinyl acetate cylinder filled with sulfur-hexafluoride. Two packets of activated-alumina dessicant are included in the tube.

Fig. 5. Detail of construction of 100-kc oscillator.

Fig. 6. Schematic of 100-kc oscillator.

Fig. 7. Schematic of plate and screen modulators.

Fig. 8. Output voltage versus output current for various rf driving voltages.

Fig. 9. Normalized no-load output voltage versus the ratio of the shunt capacitance to the between-deck capacitance.

Fig. 10. Normalized load-current-induced output-voltage drop versus the ratio of the dc output current to the ac driving current.

Fig. 11. A twelve-stage 400-kV rectifier for ion-source development.

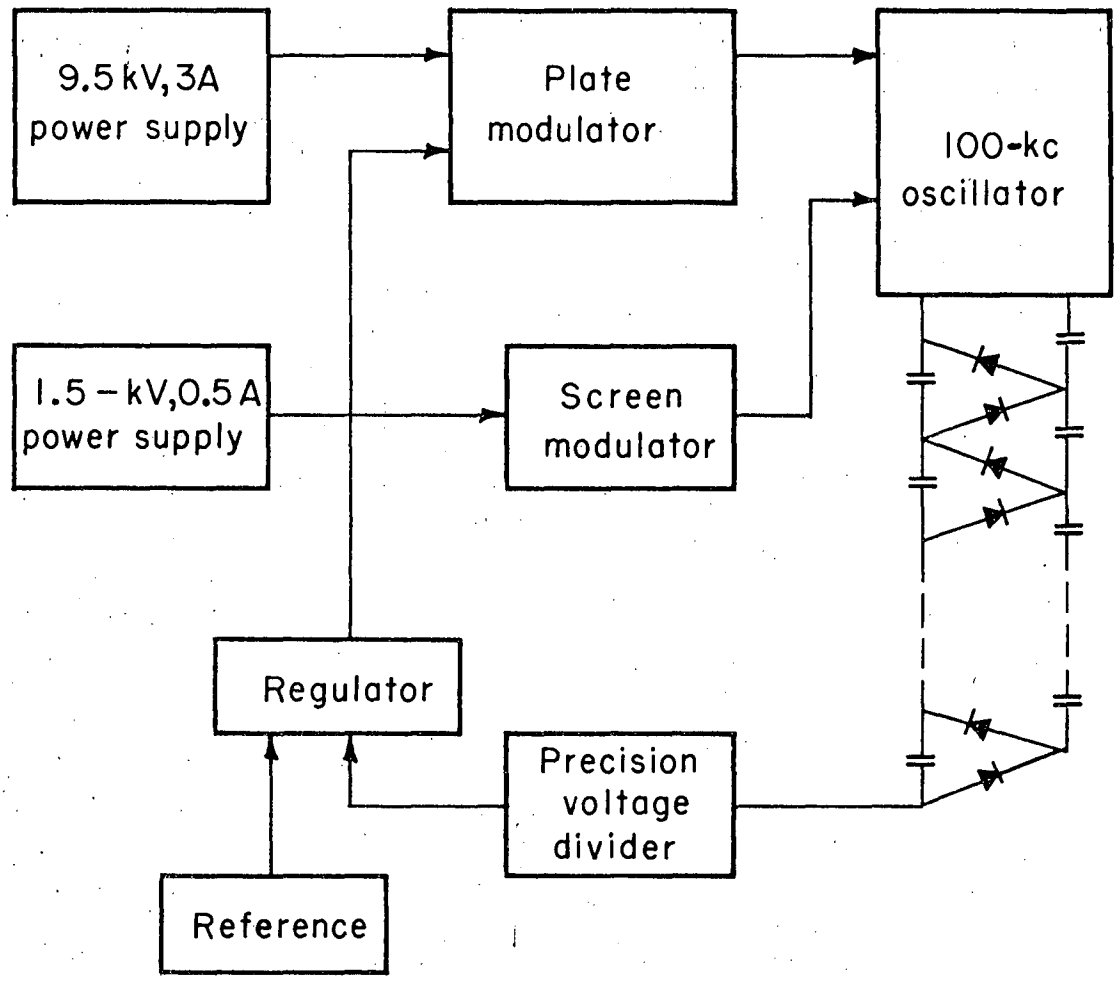

MUB-5419

Fig. 1

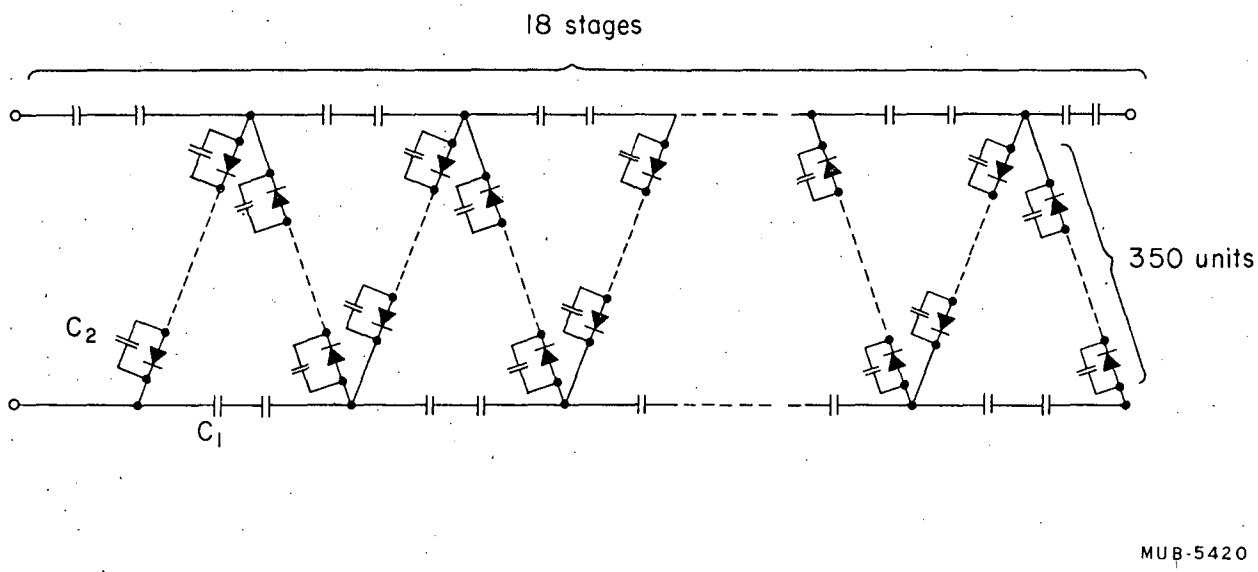

Fig. 2

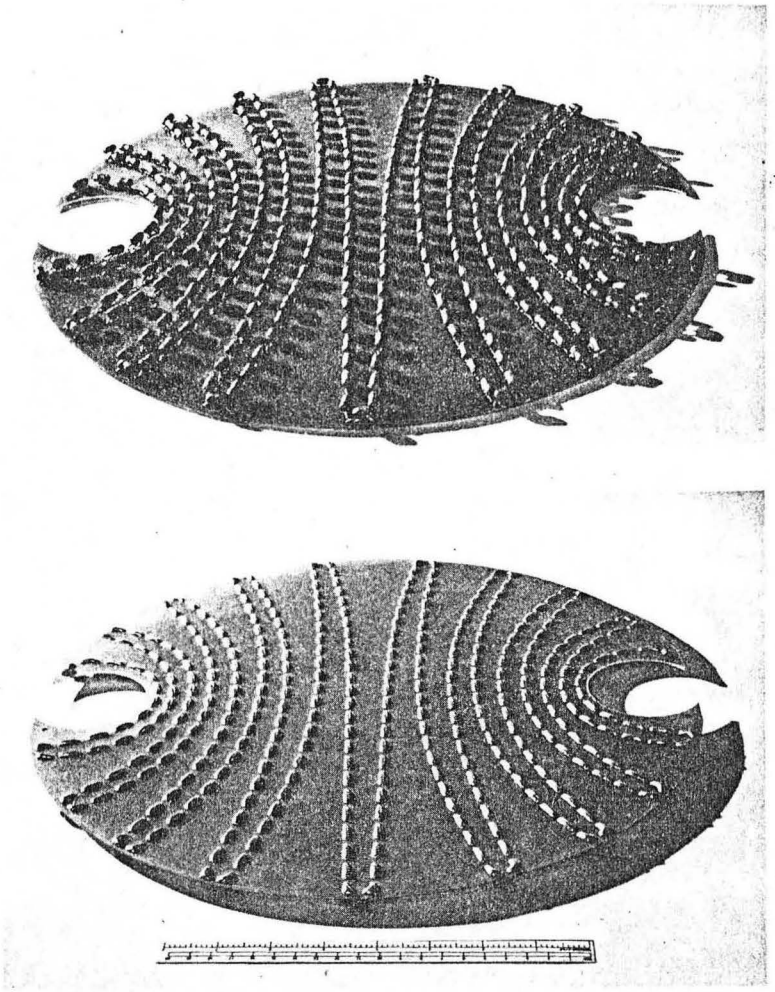

ZN-4733

Fig. 3

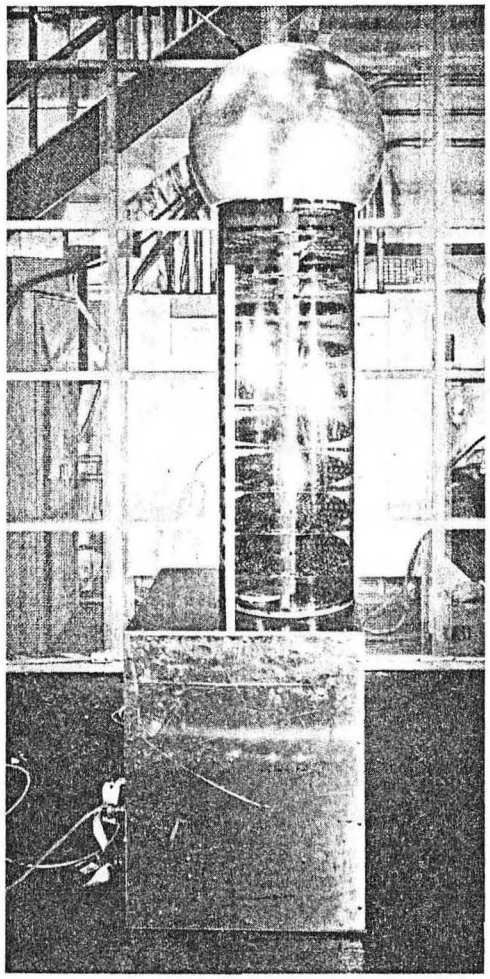

ZN-4726

Fig. 4

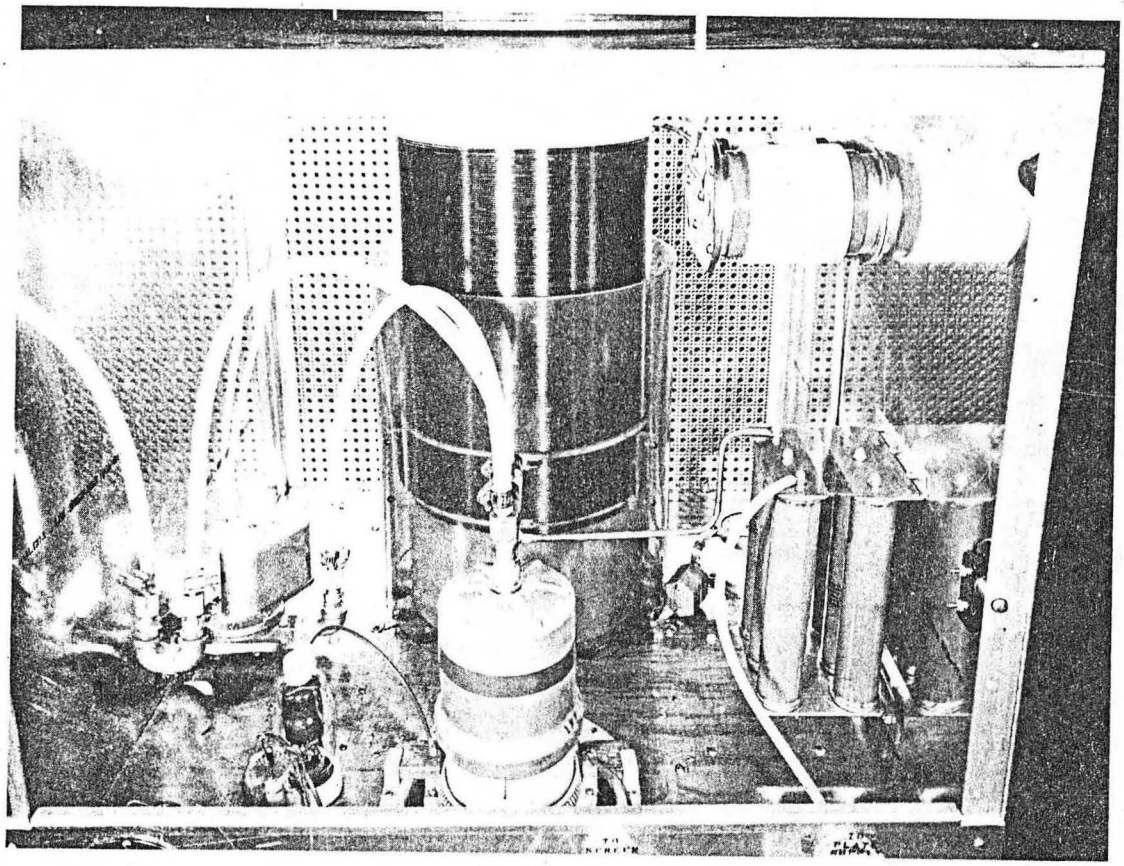

ZN-4725

Fig. 5

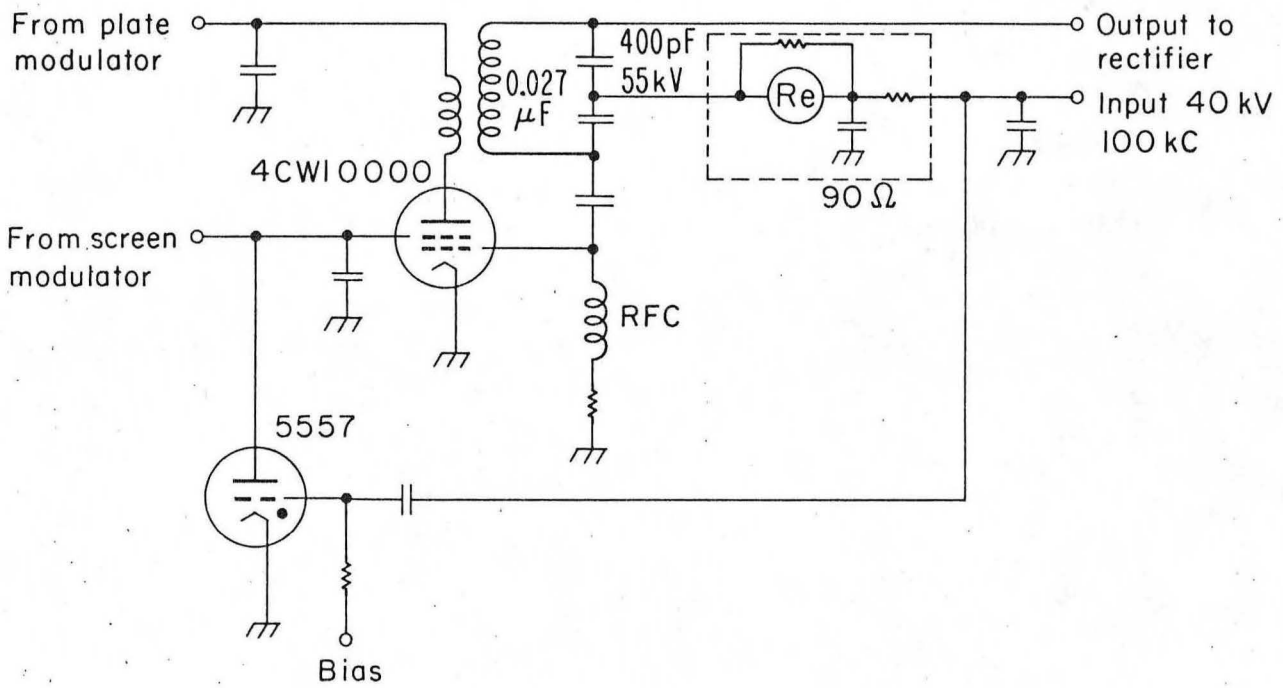

MUB-5421

Fig. 6

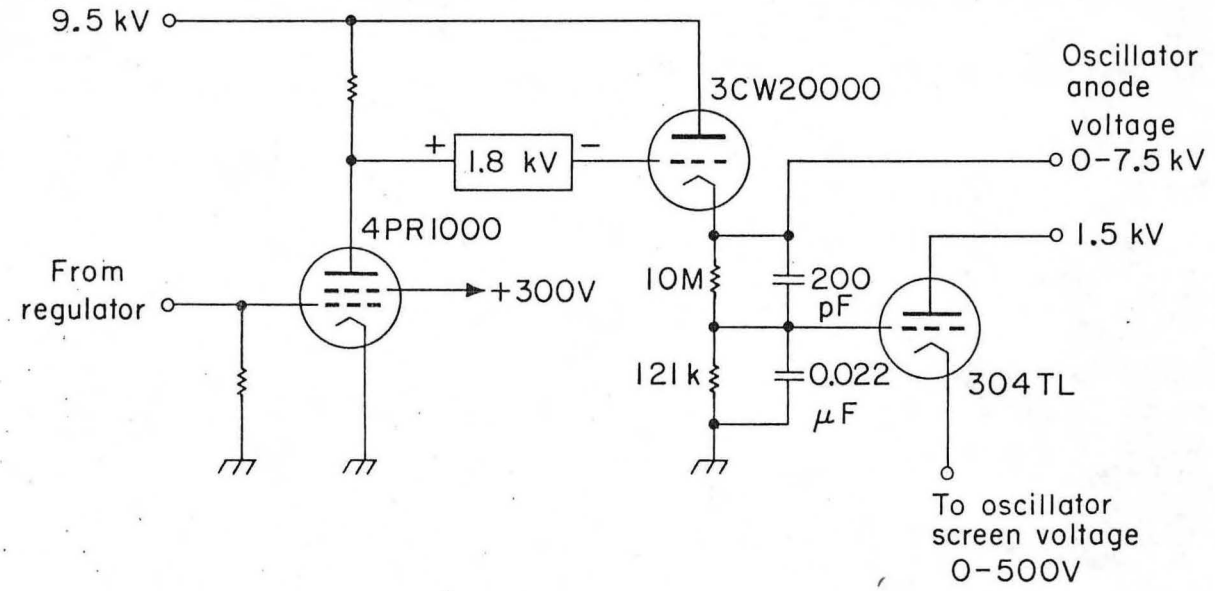

MUB-5422

Fig. 7

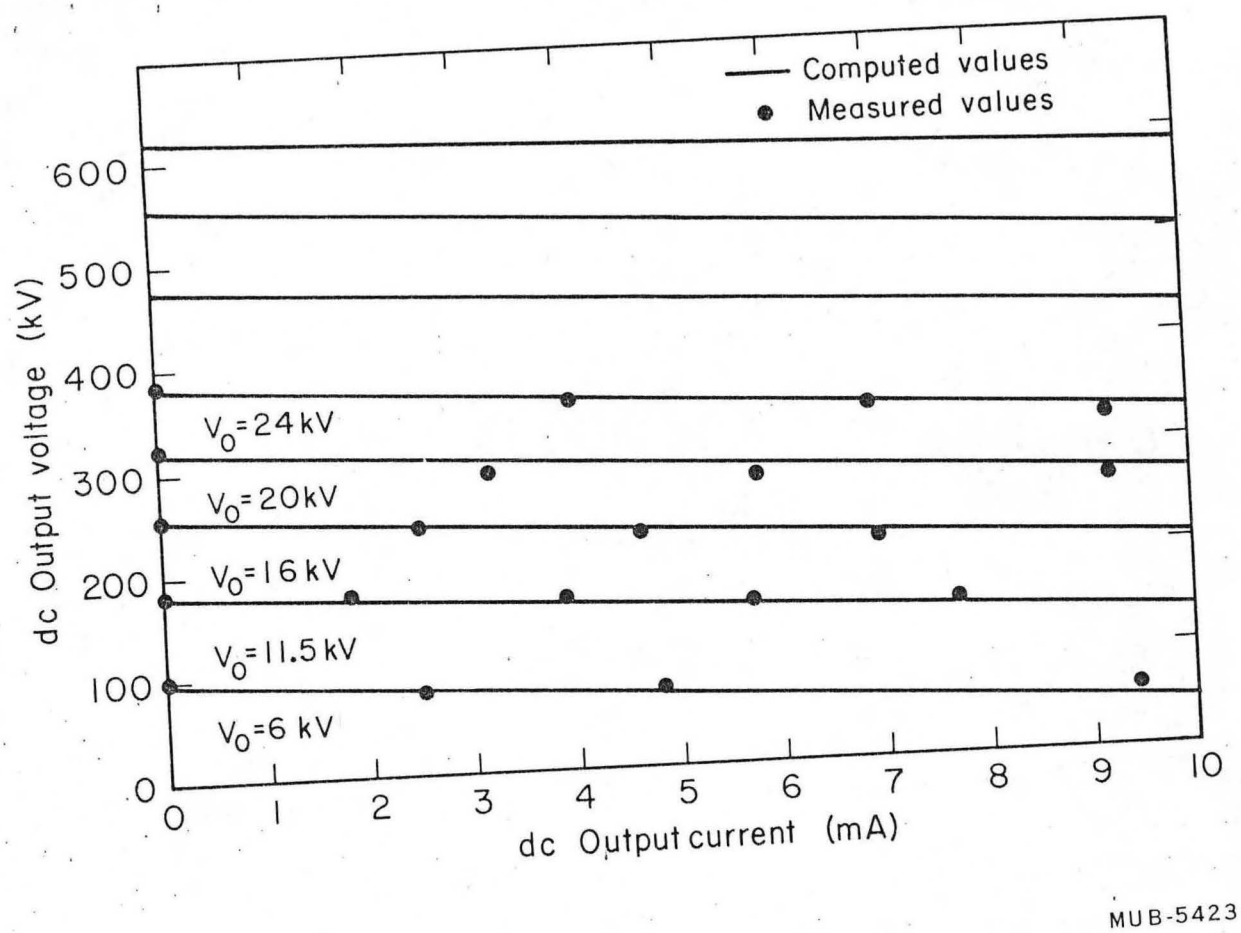
Computed values
Measured values
600
500
400
300
200
100
0
dc Output voltage (kV)
V_0=24 kV
V_0=20 kV
V_0=16 kV
V_0=11.5 kV
V_0=6 kV
0
1
2
3
4
5
6
7
8
9
10
dc Output current (mA)
MUB-5423

Fig. 8

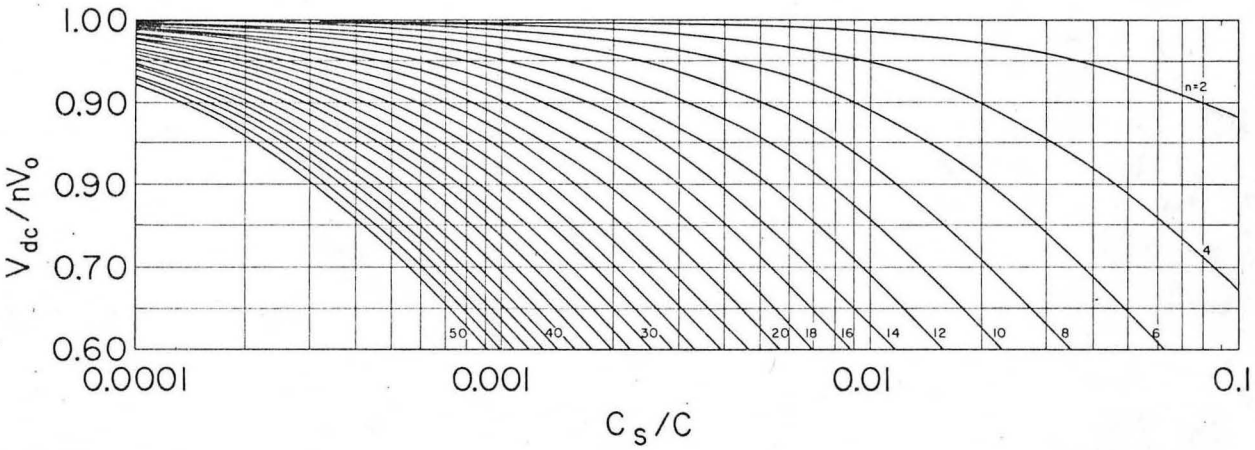
1.00
0.90
0.90
0.70
0.60
V_{dc}/nV_o
0.0001
0.001
0.01
0.1
C_s/C
n=2
4
6
8
10
12
14
16
18
20
30
40
50
MUB-3349

Fig. 9

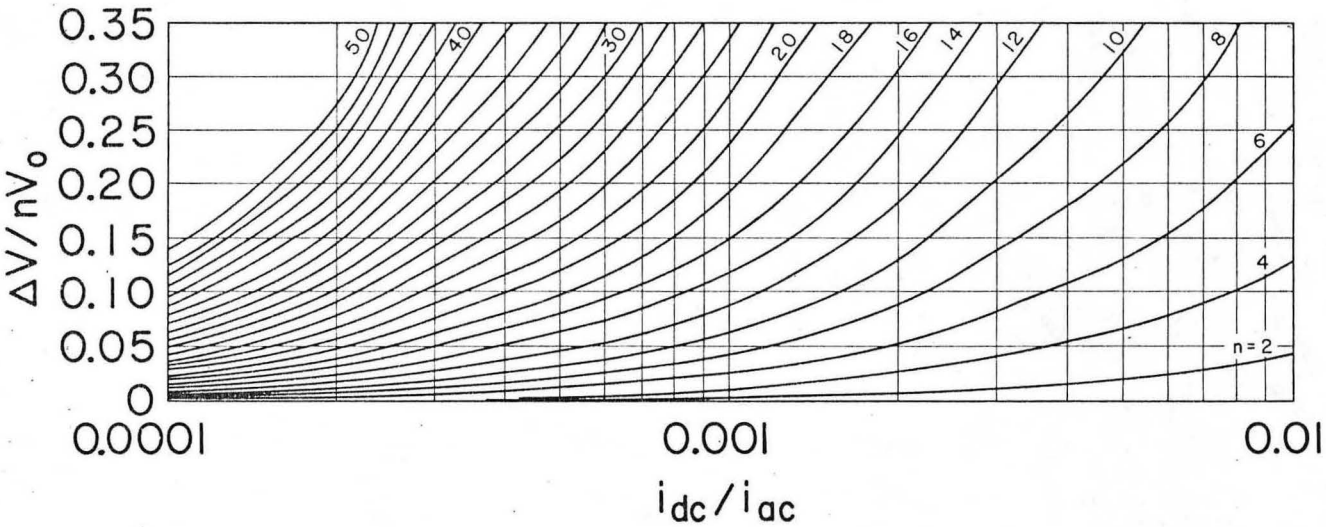

MUB-3348

Fig. 10

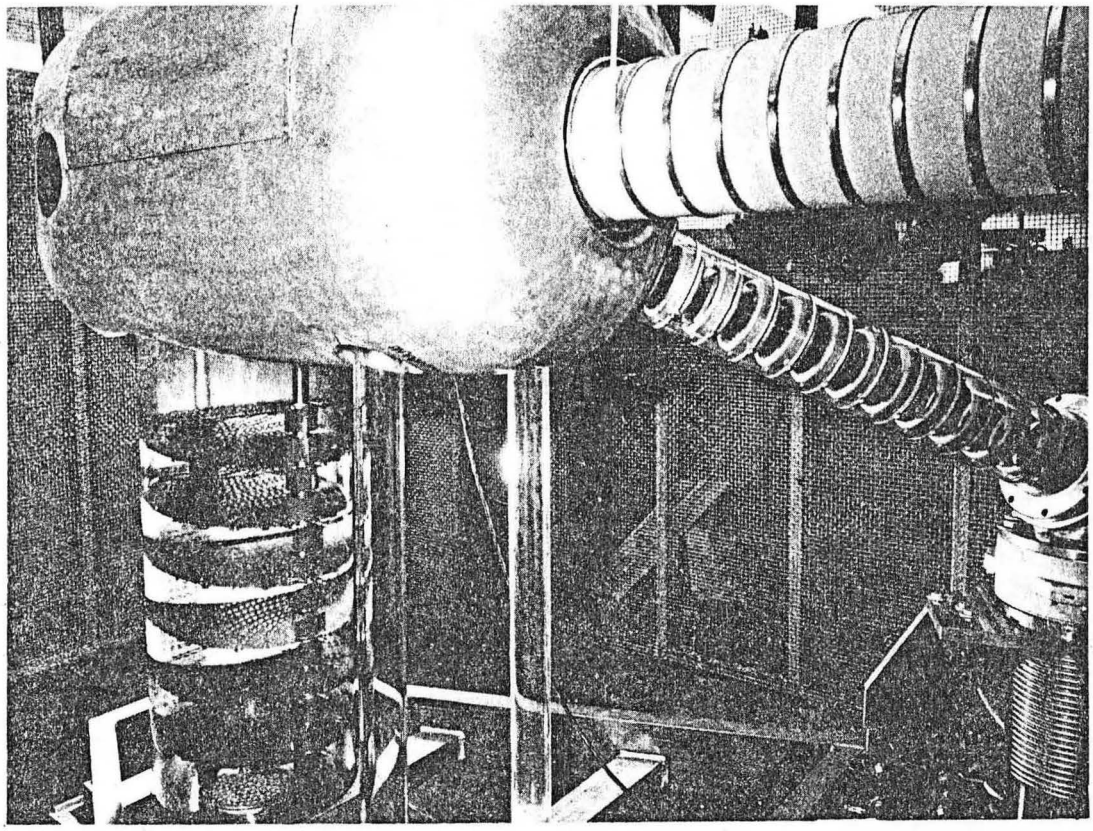

ZN-4724

Fig. 11

LEGAL NOTICE

This report was prepared as an account of work sponsored by the United States Government. Neither the United States nor the United States Atomic Energy Commission, nor any of their employees, nor any of their contractors, subcontractors, or their employees, makes any warranty, express or implied, or assumes any legal liability or responsibility for the accuracy, completeness or usefulness of any information, apparatus, product or process disclosed, or represents that its use would not infringe privately owned rights.

TECHNICAL INFORMATION DIVISION
LAWRENCE BERKELEY LABORATORY
UNIVERSITY OF CALIFORNIA
BERKELEY, CALIFORNIA 94720