UCRL-11786

University of California

Ernest O. Lawrence Radiation Laboratory

THE KARYOTYPE OF THE DOG (CANIS FAMILIARIS) OBTAINED FROM CULTURES OF PERIPHERAL BLOOD LYMPHOCYTES

TWO-WEEK LOAN COPY

This is a Library Circulating Copy which may be borrowed for two weeks. For a personal retention copy, call Tech. Info. Division, Ext. 5545

Berkeley, California

DISCLAIMER

This document was prepared as an account of work sponsored by the United States Government. While this document is believed to contain correct information, neither the United States Government nor any agency thereof, nor the Regents of the University of California, nor any of their employees, makes any warranty, express or implied, or assumes any legal responsibility for the accuracy, completeness, or usefulness of any information, apparatus, product, or process disclosed, or represents that its use would not infringe privately owned rights. Reference herein to any specific commercial product, process, or service by its trade name, trademark, manufacturer, or otherwise, does not necessarily constitute or imply its endorsement, recommendation, or favoring by the United States Government or any agency thereof, or the Regents of the University of California. The views and opinions of authors expressed herein do not necessarily state or reflect those of the United States Government or any agency thereof or the Regents of the University of California.

DISCLAIMER

This document was prepared as an account of work sponsored by the United States Government. While this document is believed to contain correct information, neither the United States Government nor any agency thereof, nor the Regents of the University of California, nor any of their employees, makes any warranty, express or implied, or assumes any legal responsibility for the accuracy, completeness, or usefulness of any information, apparatus, product, or process disclosed, or represents that its use would not infringe privately owned rights. Reference herein to any specific commercial product, process, or service by its trade name, trademark, manufacturer, or otherwise, does not necessarily constitute or imply its endorsement, recommendation, or favoring by the United States Government or any agency thereof, or the Regents of the University of California. The views and opinions of authors expressed herein do not necessarily state or reflect those of the United States Government or any agency thereof or the Regents of the University of California.

Particle Accel. Conf.
Washington, D. C., 1965

UCRL-11787

UNIVERSITY OF CALIFORNIA
Lawrence Radiation Laboratory
Berkeley, California

AEC Contract No. W-7405-eng-48

VELOCITY SPECTROMETERS USED IN BEVATRON DEFLECTED-BEAM RESEARCH

George W. Edwards and Robert D. Watt

February 4, 1965

VELOCITY SPECTROMETERS USED IN BEVATRON DEFLECTED-BEAM RESEARCH*

George W. Edwards and Robert D. Watt

Lawrence Radiation Laboratory, University of California
Berkeley, California

February 4, 1965

Abstract

Two completely redesigned 10-ft, glass-cathode, parallel-plate velocity spectrometers (MK V) have been used in particle research at 500 kV for about 3000 hr each without maintenance. Current consumption, including power supply, is approximately 100 μA on each plate (< 200 μA total). The units do not appear to be gap-sensitive, as one was operated with a 2-in. gap, and the other with a 4-in. gap. No significant operating differences are apparent.

Introduction

Briefly, Lawrence Radiation Laboratory spectrometers consist of long, narrow plates that are charged oppositely with respect to ground. A low-order magnetic field is used across the width of the plates throughout their entire length. A beam of charged particles passes lengthwise between the plates. Adjustment of the crossed electric and magnetic fields is used to select, by null deflection, charged particles of a given velocity.

Operation

The design and operating technique are basically the same as our previous models (20-ft MK III and 10-ft MK IV), which are still in use. The glass cathode is heated to about 105°C, thereby reducing the volume resistivity (ρv) to between 4×10^{8} and 1.5×10^{10} Ω cm.[1] Electrical conditioning up to 325 kV is in a vacuum of 10^{-5} to 10^{-6} torr. Above this voltage, argon is bled into the tank at a measured leak rate to hold the pressure at approximately 1.2 μ. Recently a new unit was conditioned to operate at 500 kV in about 36 hr from the start of the pumpdown. After the conditioning period the operating is done principally by the Research Group using the unit.

Our previous spectrometers are voltage-limited (425-450 kV) from electrode-to-ground by the clearance of about 2-1/2 inches. A 2-hr test was conducted on one of the new units at 600 kV with no indication of trouble from electrode-to-ground or in the gap between electrodes. Long-term tests have not been made to find the maximum acceptable operating limits.

Several factors appear to contribute to the improved operation, namely:

1. Four-inch diameters are used all around the edges of the electrodes.

2. A 4-in. clearance between the electrodes and the ground plane is used wherever possible.

3. Electrode support insulators with copper ends, hard-soldered to them, have proven maintenance-free.

4. High-voltage feed-through assemblies are located in the magnetic fringe rather than in a high-field region.

Description

General

The electrodes are mounted parallel inside a vacuum tank, 2.5 ft square by 10 ft long (Figs. 1 & 2). The magnet coils are wound on the aluminum vacuum tank. The steel magnet pole pieces on the sides of the tank also serve as cover plates for the large rectangular access openings. Return-path steel plates cover the coils on the top and bottom of the tank. The cathode and anode are 10 ft long by 1 ft wide on the flat. The electrode mountings are designed to permit cathode and anode position to be reversed from that shown in Fig. 2. Electrode gap is adjustable, with a maximum of 4 inches. Stainless steel, diverging electrode extensions are mounted on each end of the electrodes; the high-voltage lead-in connects to these extensions at one end of the electrodes. The extensions are duplicated at the opposite end to reduce aberrations. A polished stainless steel liner serves the dual purpose of a ground plane and a heat shield. Input to the heaters is about 750 W. The vacuum system consists of a 6-in. oil diffusion pump with an optically dense chevron-type LN trap.

Anode

The anode (Fig. 3) consists of a rigid, 10-ft strongback fabricated of 304 stainless steel. After all welding and drilling are completed the unit is surface-ground on the gap side. A 3/16-in. -thick 304 stainless plate is screwed and dowelled to the ground face of the strongback. Half-round, 4-in.-diameter-sheet, stainless fairings are used to hide all sharp edges.

*Work performed under the auspices of the U. S. Atomic Energy Commission.

Cathode

The 10-ft long cathode (Fig. 4) is made up of four 30-in. -long, channel-shaped glass plates (Fig. 5). Mounting grooves are cut on the inside of the legs of the channel. Spring-loaded angles engage the mounting grooves in the glass and are bolted to a 10-ft long, stainless steel strongback. Two vital factors are incorporated in the mounting of the four pieces of glass. First, the glass mounting accomodates the differential expansion of the materials due to a ΔT of about 85°C. Second, the glass-mounting permits micrometer alignment of the individual pieces. Considerable effort is expended to attain a zero tolerance plane at ambient temperature.

Glass

The 30-in. long, glass cathode pieces are fabbricated from commercial 1-in. -thick, soda-lime plate glass. They are gravity-slumped on a male mold at about 720°C; precise control of the temperature change is maintained above the strain point (<470°C). Reference 2 gives mold data and the temperatures used in forming the rough blanks. After slumping, the rough blanks are trimmed to size and the gap surface is ground and polished to a flat plane within 0.001 inch. Grooving is done with a diamond form cutter. All radius work is then done by hand. Conventional plate-glass bevelling equipment and techniques are used. No attempt is made to produce mechanically true radii. An uninterrupted curve without any visible lines is obtained by repeated visual inspection and touchup. Silver conductive paint is used on the inside surface of the grooves and over the area encompassed by the support angles; it is felt that the paint gives more uniform current distribution.

Insulators

Two types of insulators, both approximately 7 in. long, were used in the new units. Insulators from our older separators were adapted to one new unit. They are 99% alumina with two 1/4-20 tapped holes 1 in. deep in the ends. The electrical contact between the insulator and the metal end was improved over the former mounting method. As a result the service life in this run was at least double any previous usage. During the latter part of this run the current drain was increasing, an indication of trouble to come. Inspection revealed four insulators had small pin holes blown through the ceramic, from the end of the mounting screws to the first convolution.

The second unit was equipped with electrode support insulators (Fig. 6) of 99% alumina with copper ends hard-soldered to the ceramic. No increase in the current drain has been detected at this time so the service life cannot be predicted. The intimate connection between the ceramic and the metal ends appears to have made the design of the corona shields less critical.

High-Voltage Lead-In

The high-voltage feed-through assemblies (Fig. 7) are located in a low magnetic fringe field. The four earlier model separators now in use have the feed-through located in a higher field region. The only change in the design of the old and new separator feed-throughs is in the clearance to ground which was increased from 3 in. to 4. The service life of the insulator bushing has been increased from about 500 to 3000 hr.

Cleaning

Reference 3 outlines the cleaning procedures used in fabrication and assembly of the units. The heating and careful electrical conditioning at high vacuum remove the bulk of the residual volatile contaminates prior to high-voltage operation.

Cost

Two 10-ft and two 15-ft units of the type described herein have been built in the past 18 months. No operating experience on the longer units is available at this time. Total cost of the four units was $8100 per foot excluding high-voltage power supplies; engineering costs of $1000 per foot are included in this figure. The glass plates cost less than $1000 each, finished ready for use. The quantities of glass fabricated provided for 100% spares.

References

1. Davey S. Ijams, Lawrence Radiation Laboratory Engineering Note M3324A, May 1964 (unpublished).

2. George W. Edwards, Lawrence Radiation Laboratory Engineering Note M3472, Dec. 1964 (unpublished).

3. George W. Edwards, Lawrence Radiation Laboratory Engineering Note M3368A, July 1964 (unpublished).

Figure Captions

Fig. 1—Elevation view of spectrometer.

Fig. 2—Cross-section of assembly.

Fig. 3—Anode.

Fig. 4—Cathode.

Fig. 5—Glass cathode plate.

Fig. 6—Insulator.

Fig. 7—High-voltage feed-through.

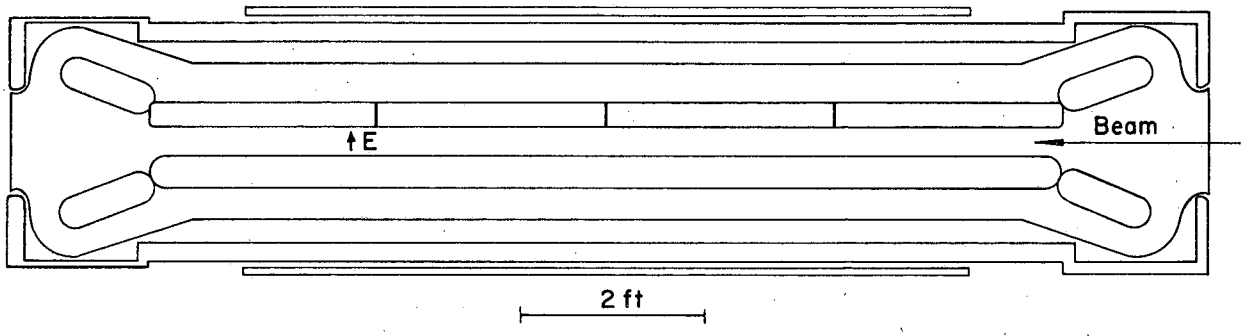

MUB-5370

Fig. 1

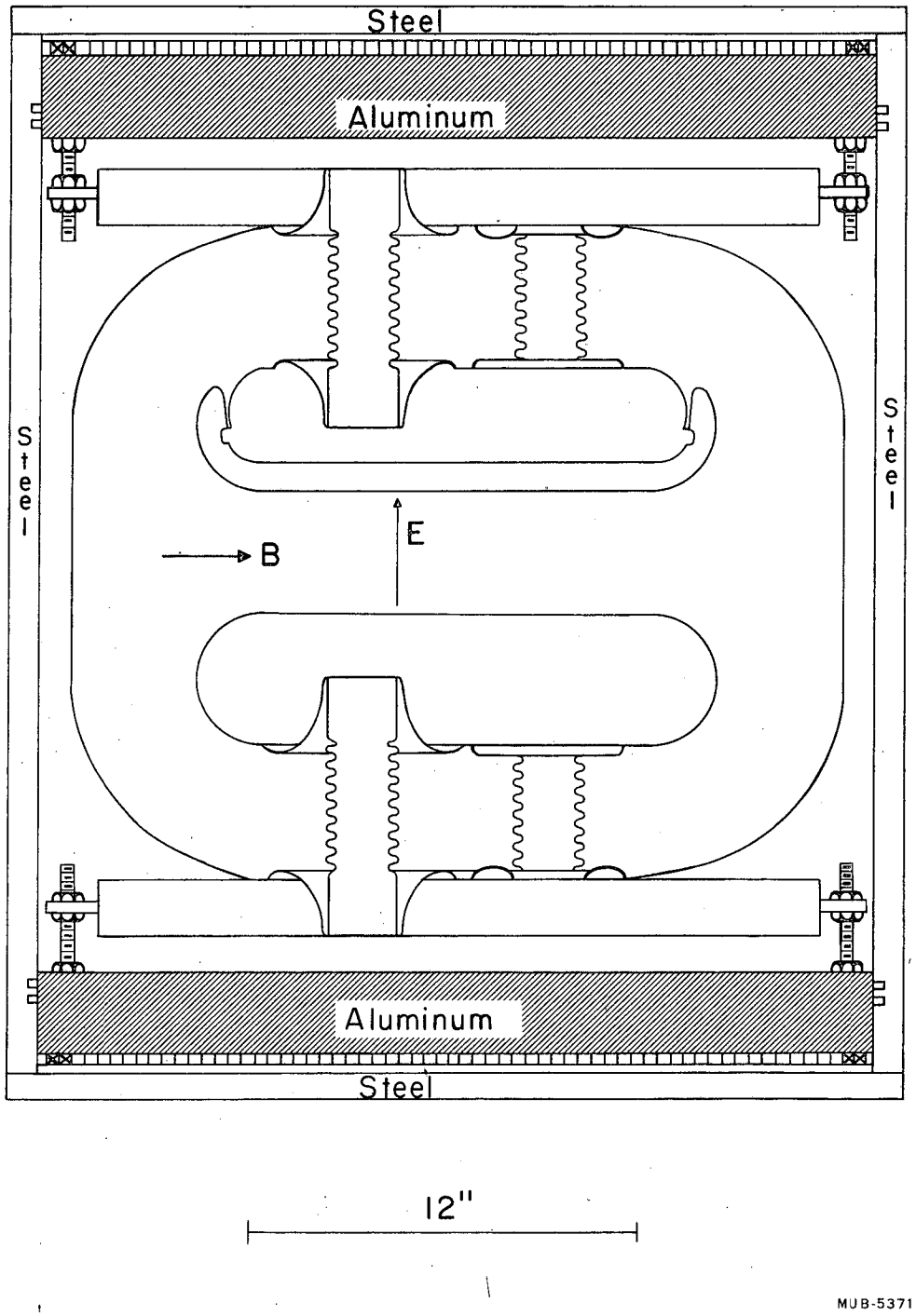

Fig. 2

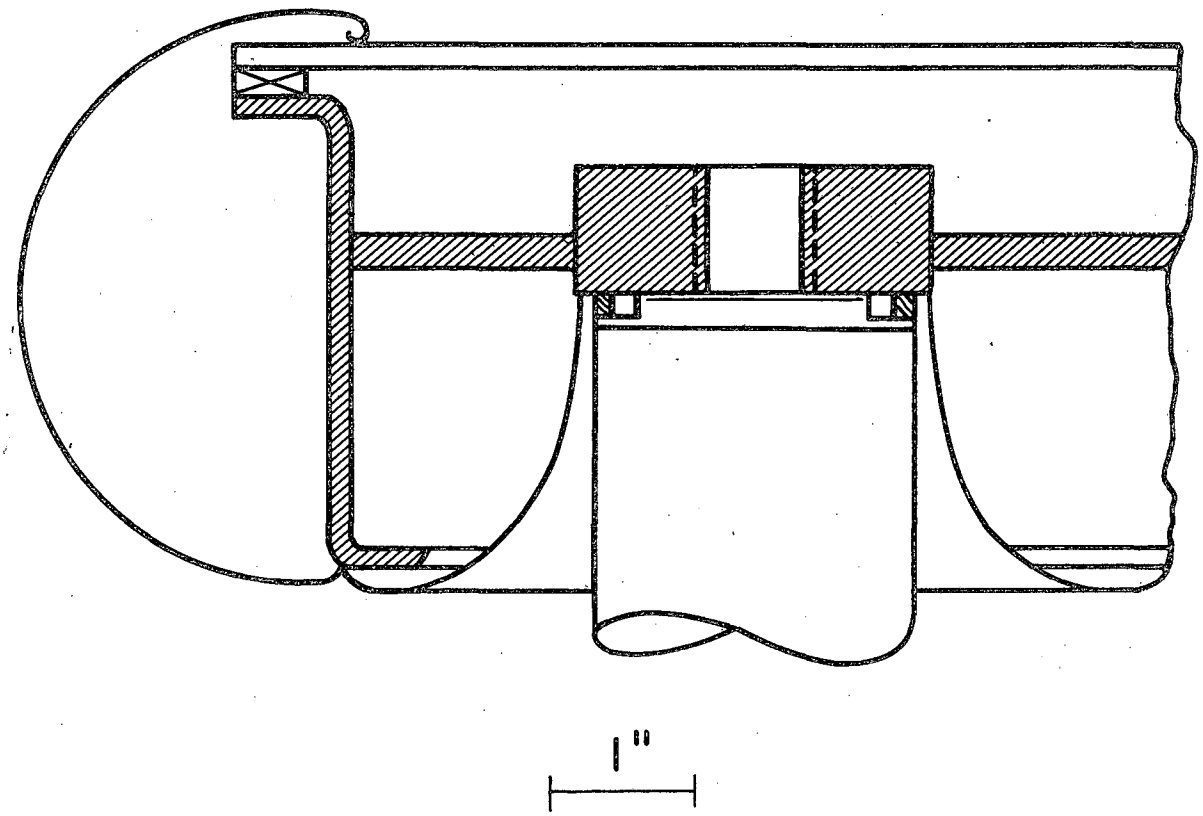

MUB-5372

Fig. 3

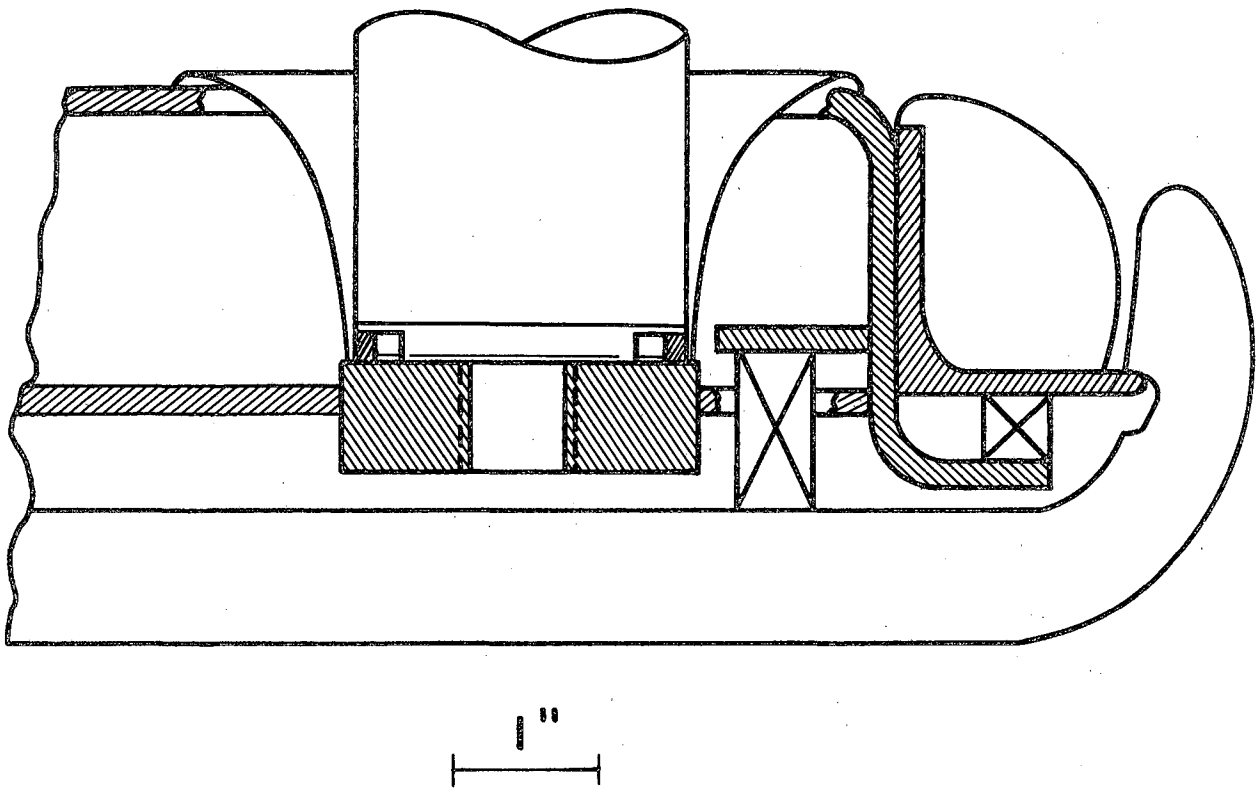

MUB-5373

Fig. 4

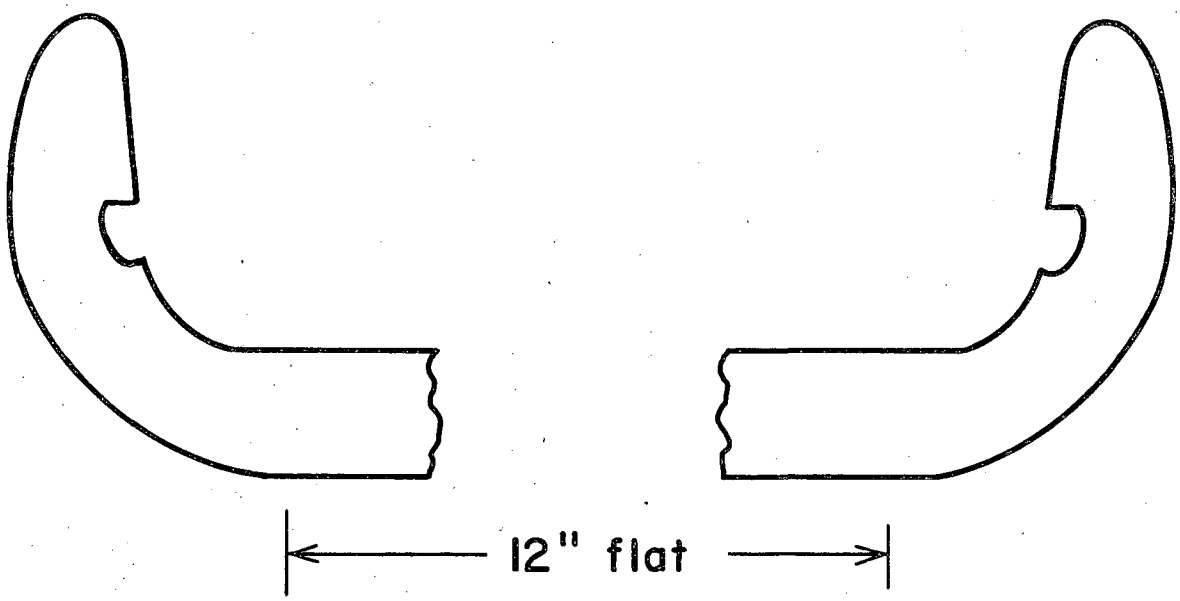

MUB-5374

Fig. 5

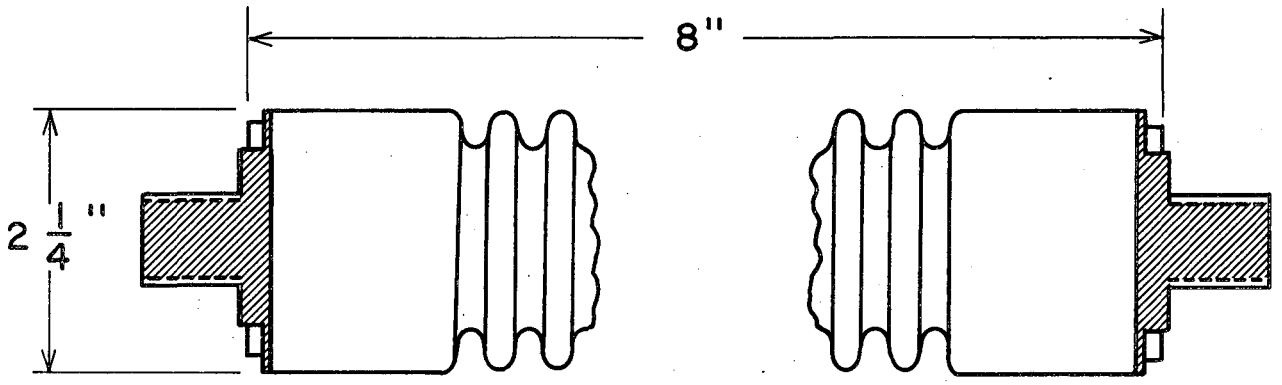

MUB-5375

Fig. 6

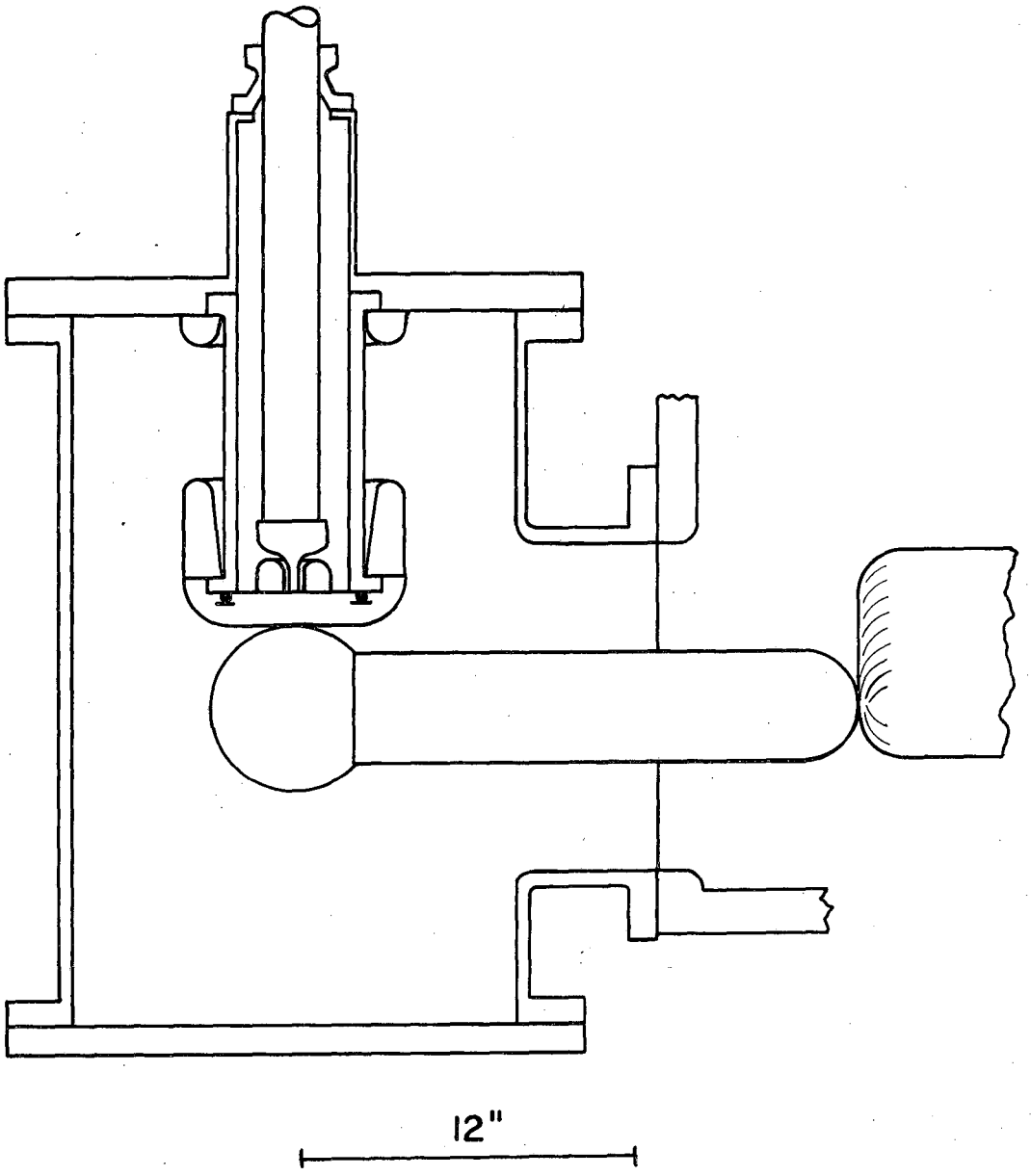

MUB-5376

Fig. 7

This report was prepared as an account of Government sponsored work. Neither the United States, nor the Commission, nor any person acting on behalf of the Commission:

A. Makes any warranty or representation, expressed or implied, with respect to the accuracy, completeness, or usefulness of the information contained in this report, or that the use of any information, apparatus, method, or process disclosed in this report may not infringe privately owned rights; or

B. Assumes any liabilities with respect to the use of, or for damages resulting from the use of any information, apparatus, method, or process disclosed in this report.

As used in the above, "person acting on behalf of the Commission" includes any employee or contractor of the Commission, or employee of such contractor, to the extent that such employee or contractor of the Commission, or employee of such contractor prepares, disseminates, or provides access to, any information pursuant to his employment or contract with the Commission, or his employment with such contractor.