FOR REFERENCE

NOT TO BE TAKEN FROM THIS ROOM

UCRL- 1178

UNCLASSIFIED

UNIVERSITY OF CALIFORNIA — BERKELEY

RADIATION LABORATORY

DISCLAIMER

This document was prepared as an account of work sponsored by the United States Government. While this document is believed to contain correct information, neither the United States Government nor any agency thereof, nor the Regents of the University of California, nor any of their employees, makes any warranty, express or implied, or assumes any legal responsibility for the accuracy, completeness, or usefulness of any information, apparatus, product, or process disclosed, or represents that its use would not infringe privately owned rights. Reference herein to any specific commercial product, process, or service by its trade name, trademark, manufacturer, or otherwise, does not necessarily constitute or imply its endorsement, recommendation, or favoring by the United States Government or any agency thereof, or the Regents of the University of California. The views and opinions of authors expressed herein do not necessarily state or reflect those of the United States Government or any agency thereof or the Regents of the University of California.

UNCLASSIFIED

UNIVERSITY OF CALIFORNIA
Radiation Laboratory

Cover Sheet
Do not remove

INDEX NO. UCRL-1178
This document contains 9 pages
This is copy 100 of 110 Series A

Issued to Information Div.

~~OFFICIAL USE ONLY~~
classification

Each person who receives this document must sign the cover sheet in the space below.

Route to	Noted by	Date	Route to	Noted by	Date

UCRL-1178
Physics and Mathematics

UNCLASSIFIED

UNIVERSITY OF CALIFORNIA

Radiation Laboratory

Contract No. W-7405-eng-48

Classification change to UNCLASSIFIED
by authority of P.K. Waberling
By B Foskett Date 6/22/57
Person making change

SUMMARY OF THE REASEARCH PROGRESS MEETING OF MARCH 1, 1951

Bonnie E. Cushman

April 5, 1951

Special Review of Declassified Reports
Authorized by USDOE JK Bratton
Unclassified TWX P182206Z May 79

REPORT PROPERLY DECLASSIFIED
T. B. Stuart 8-21-79
Authorized Derivative Classifier Date
Y. Cohen 8-22-79
By Date

Some of the results reported in this document may be of a preliminary or incomplete nature. It is the request of the Radiation Laboratory that the document not be circulated off the project nor the results quoted without permission.

Berkeley, California

OF[redacted]Y

Standard Distribution: Series A	Copy Numbers
Argonne National Laboratory	1-10
Armed Forces Special Weapons Project	11
Atomic Energy Commission, Washington	12-17
Battelle Memorial Institute	18
Brookhaven National Laboratory	19-22
Bureau of Ships	23
Carbide & Carbon Chemicals Division (K-25 Plant)	24-25
Carbide & Carbon Chemicals Division (Y-12 Area)	26-29
Chicago Patent Group	30
Chief of Naval Research	31
Columbia University (Dunning)	32
duPont Company	33-35
General Electric Company, Richland	36-39
Hanford Operations Office	40
Idaho Operations Office	41-44
Iowa State College	45
Kellex Corporation	46
Knolls Atomic Power Laboratory	47-50
Los Alamos	51-53
Mallinckrodt Chemical Works	54
Mound Laboratory	55-57
National Advisory Committee for Aeronautics	58
National Bureau of Standards	59
Naval Medical Research Institute	60
Naval Radiological Defense Laboratory	61
Naval Research Laboratory	62
NEPA Project	63-65
New Brunswick Laboratory	66
New Operations Office	67
New York Operations Office	68-69
North American Aviation, Inc.	70-72
Oak Ridge National Laboratory, X-10 Site	73-80
Patent Branch, Washington	81
Sandia Corporation	82
Technical Information Service, Oak Ridge	83-97
UCLA Medical Research Laboratory (Warren)	98
U.S.A.F. - Headquarters	99
University of California Radiation Laboratory	100-104
University of Rochester	105-106
Westinghouse Electric Corporation	107-110
Total	110

Information Division
Radiation Laboratory
Univ. of California
Berkeley, California

O[redacted]Y

SUMMARY OF THE RESEARCH PROGRESS MEETING OF MARCH 1, 1951

Bonnie E. Cushman

April 5, 1951

I. Absorption Spectra of Americium Chloride Crystals. J. Conway

The + 3 rare earth elements show a unique sharpness in their absorption spectra, the cause of which has been attributed to the 4f electrons. The sharpness reaches a maximum with europium. With americium, the analog of europium, the same sharpness in absorption spectra is observed, due here to the 5f electrons, and it is considered to be further evidence for the actinide theory.

77 lines have been found with $AmCl_3$ at 77° K, the low temperature being used to sharpen up the lines and resolve some not observable at room temperature. The americium must be very pure--a trace of $FeCl_3$ will block out the entire spectrum. A good deal of difficulty was encountered in growing the crystals, since the amounts used were necessarily small, and the crystals, when grown slowly, became opaque and disintegrated because of the high alpha activity. The crystals, therefore, had to be made rapidly and regrown every few days.

The lines were measured down to 3600 Å (using liquid nitrogen to obtain 77 K°) and a good many exist below this. Lower temperatures will eliminate some of the higher levels, but they will be hard to reach due to the difficulty of obtaining enough liquid helium to work with, and to the hazards of handling liquid hydrogen.

Fig. 1 shows the experimental set up, using a tungsten filament and two quartz lenses. The crystals, 50-100 μg samples, were grown on microscope slides and sealed in a glass box $\frac{1}{4}$ in. thick to enable handling out of the

dry box. This assembly was then placed in a dewar flask equipped with windows. A 200 μ slit was used.

It is intended to extend the wave-length measurements by using a quartz spectrograph, and it is also hoped that the temperature range can be increased in future experiments.

II. A Fast Counting Technique. R. Madey.

A fast counting technique was needed to detect gamma rays in coincidence from π^0 mesons when protons bombard carbon targets in the cave. Electrons are detected but with much more difficulty at the cyclotron than at the synchrotron because of the neutron background which makes the accidentals rates quite high.

The new circuit, redesigned by Boris Ragent, is based on one described by R. L. Garwin in The Review of Scientific Instruments 21, 569 (June, 1950) which uses a Rossi circuit with a clamping diode. Testing has been carried out with a photomultiplier pulse generator in order to approximate the signals met in actual work. Apparatus tested with ordinary pulse generators did not respond accurately under experimental conditions. Three photomultiplier tubes with a stilbene phosphor are used. The resolving time is 5×10^{-9} sec. A quadruple coincidence circuit was built on the same principle, but it would not work with an unlimited pulser.

A limiter, a pentode with a sharp cut-off, was designed to run at full screen limitation (see Fig. 2). In order to get two volts on the grid, the photomultiplier must have high voltage. By using the limiter one can limit the pulse heights from the photomultiplier tubes. The tubes put out fast pulses and it was found desirable to lengthen them. A large resistor was used so that the voltage was determined by the capacitance. A shorted delay line clipped

the pulse, making it essentially square. With this arrangement the quadruple coincidence circuit worked with a resolving time of 2.5×10^{-8} sec. The input voltage was -2 volts and the output voltage 0.5 volts into a 125 ohm load. The discrimination ratio was 30-50. The pulse lengthener was used in the output circuit to get a 10^{-7} sec. pulse. Further changes had to be made when the apparatus was used at the cyclotron in order to get Pb-Cu differences. The performance of the limiter in terms of voltage on the photomultipliers and pulse heights is as follows:

1.00 kv	1.50 cm
1.40	2.00
1.60	2.00
2.00	2.40

The photomultiplier tubes must be shielded from the magnetic field which is 17-20 gauss in the cave. A double shell of iron 1/8 in. thick was used to obtain electrostatic shielding also.

Preliminary runs were successful with respect to the electronics involved.

III. An Attempt to Detect μ Pairs at the Synchrotron. W. Jarmie.

J. W. Mather, E. A. Martinelli, and W. N. Jarmie have attempted to detect μ pairs produced by photons. The experimental set up and electronics arrangement are shown in Figs. 3 and 4. The scintillator was terphenyl in xylene in 4 in. glass cylinders.

The number of pairs expected is calculated by

$$\text{No.} = n(\Omega)^2 D^2 \eta^2 (\text{Cap}) \int P(k)\, N(k)\, \sigma(k)\, dk$$

where n is the number of nuclei per square centimeter, Ω the solid angle subtended by the counter at the target, D the fraction of decay electrons accepted

by the delayed electron gates, η the efficiency of the counters for μ electron decay, Cap a factor due to the capture instead of decay of the μ meson, P(k) a factor to account for the effects of the counter accepting only a given energy range and the way in which the total energy is split, (N)k relates to the photon spectrum at the synchrotron, and σ is the cross section of the products. Calculations using the electromagnetic field theory give 1×10^{-16} pairs per equivalent quanta for a CH_2 target, and 5×10^{-15} pairs per e.q. for a Pb target, or approximately 10^{-7} pairs/min.

However, in spite of the small expected yield, it was decided to make the run to look for other methods of μ pair production. A beam was chosen where there was a low number of accidentals and CH_2 and Cu targets were used at 90° and 135° angles. Elements with high Z values proved to give too many accidentals to be useful. The results are as follows for a CH_2 target:

At 90°, 1 count per 5.6×10^{10} e.q. with 0.17 per 5.6×10^{10} e.q. the calculated number of accidentals. At 135°, 1 count per 2.5×10^{11} e.q. with 2.2 calculated accidentals per 2.5×10^{11} e.q. The results are in fair agreement with those of Steinberger and Bishop and are interpreted to mean that if a process similar to electromagnetic production gave a counting rate of this order of magnitude, it would have to have a cross section 2×10^5 larger than the electromagnetic cross section. It was also concluded that the μ pair/π^+ ratio was $\leq$ 3 percent.

The large number of accidentals is due to electron singles flooding the gates and future work must try to reduce this rate. Thinner crystals closer to the beam might improve the experiment, but it is doubtful that increasing the beam energy would help much and it might make multiple π^+ production flood the gates. Increasing the number of channels would raise the accidental rate and complicate the electronics.

A complete report will be issued soon.

Information Division
scb/4-5-51

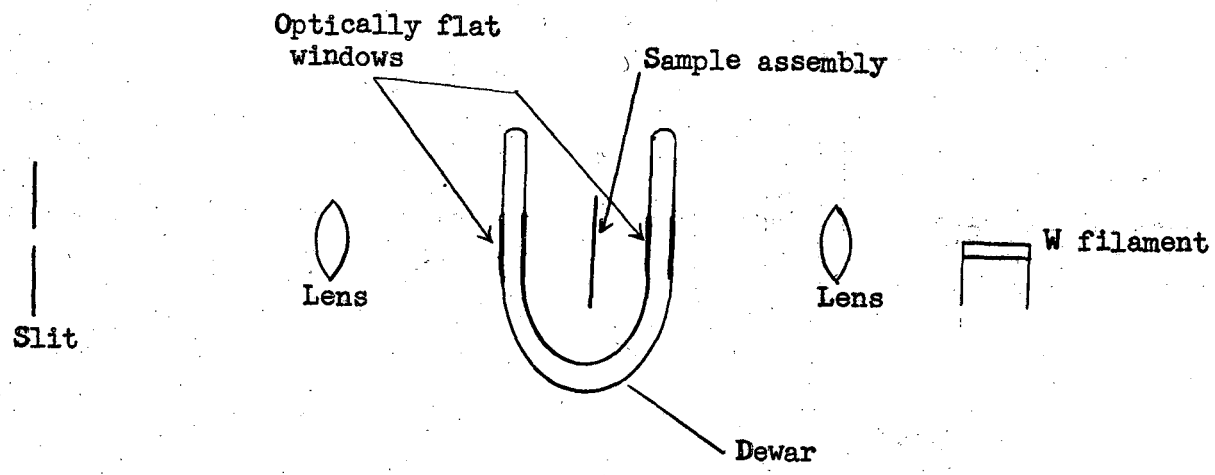
Optically flat windows
Sample assembly
Slit
Lens
Lens
W filament
Dewar

Fig. 1

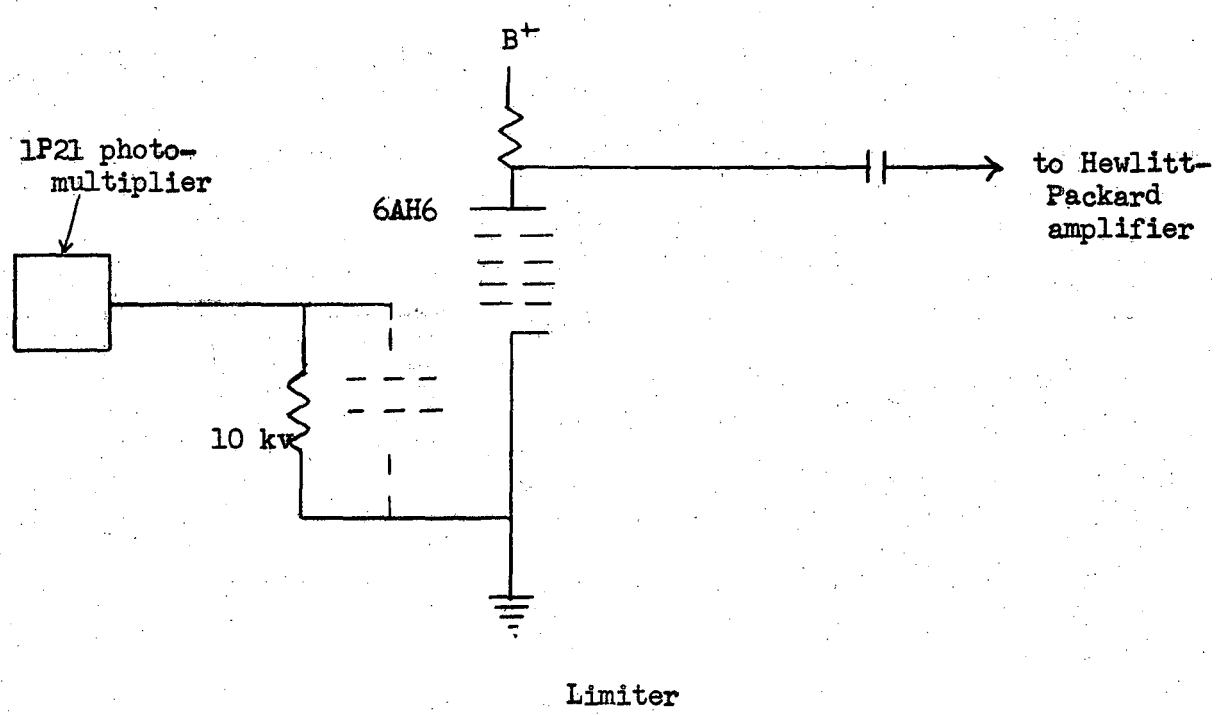
B+
1P21 photo-multiplier
6AH6
to Hewlitt-Packard amplifier
10 kv
Limiter

Fig. 2

ELECTRONICS ARRANGEMENT

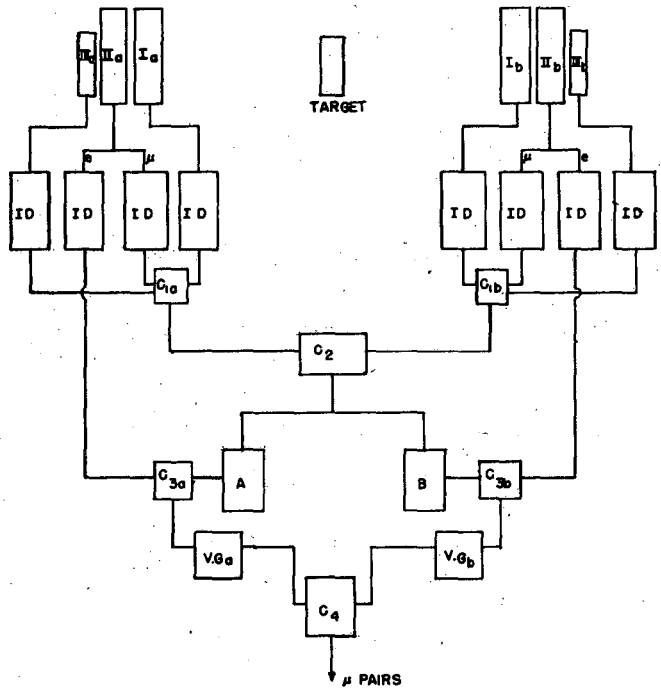

I, II, III a&b – 3 CRYSTAL TELESCOPE
I.D. – INVERTER DISCRIMATORS
μ – MESON PULSE
e – ELECTRON PULSE
C_{1a}, C_{1b} – COINCIDENCE-ANTICOINCIDENCE UNIT
C_2 – PAIR COINC. $\tau \sim 10^{-7}$ SEC
C_{3a}, C_{3b} – ELECTRON-GATE COINC. $\tau \sim 10^{-7}$
C_4 – FINAL COINC. $\tau \sim 10^{-7}$
A, B – 4 CHANNEL – 2μS TANDEM GATE MAKER
VG_a, VG_b – PULSE WIDENER

MU 1441

Fig. 3