UCRL-11801 c.2

University of California

Ernest O. Lawrence Radiation Laboratory

FERRITE MEASUREMENTS FOR
SYNCHROTRON RF ACCELERATING SYSTEM DESIGN

TWO-WEEK LOAN COPY

This is a Library Circulating Copy which may be borrowed for two weeks. For a personal retention copy, call Tech. Info. Division, Ext. 5545

Berkeley, California

DISCLAIMER

This document was prepared as an account of work sponsored by the United States Government. While this document is believed to contain correct information, neither the United States Government nor any agency thereof, nor the Regents of the University of California, nor any of their employees, makes any warranty, express or implied, or assumes any legal responsibility for the accuracy, completeness, or usefulness of any information, apparatus, product, or process disclosed, or represents that its use would not infringe privately owned rights. Reference herein to any specific commercial product, process, or service by its trade name, trademark, manufacturer, or otherwise, does not necessarily constitute or imply its endorsement, recommendation, or favoring by the United States Government or any agency thereof, or the Regents of the University of California. The views and opinions of authors expressed herein do not necessarily state or reflect those of the United States Government or any agency thereof or the Regents of the University of California.

Particle Accelerator
Conference - Washington D. C.
March 10-12, 1965

UCRL-11801

UNIVERSITY OF CALIFORNIA

Lawrence Radiation Laboratory
Berkeley, California

AEC Contract No. W-7405-eng-48

FERRITE MEASUREMENTS FOR SYNCHROTRON RF ACCELERATING SYSTEM DESIGN

Quentin A. Kerns, Gerald S. Tool, and Joseph E. Katz

March 1965

FERRITE MEASUREMENTS FOR SYNCHROTRON RF ACCELERATING SYSTEM DESIGN

Quentin A. Kerns, Gerald S. Tool, and Joseph E. Katz
Lawrence Radiation Laboratory
Berkeley, California

Summary

Ferrites provide a reliable and flexible means of electronically tuning particle accelerator rf cavities without wasting a disproportionate amount of rf power. A systematic design procedure is presented for a ferrite tuned rf resonator. Radio frequency considerations, and use of salient ferrite parameters are the prime considerations of the design example. Using requirements set forth in the rf design, a bias supply design is discussed with respect to optimization of overall system design.

General Considerations

The design of a ferrite-tuned rf accelerating system can be accomplished by systematic design procedures when due attention is given to several important considerations. The use of ferrite in rf cavity tuners departs from established practice in other uses of ferrites, e.g., in transformers, where the portion of the ferrite B-H loop associated with small values of H is important. To attain low rf losses in a ferrite-tuned cavity, the operating point of the ferrite on its B-H curve should be chosen such that the ferrite stores rf magnetic energy by domain rotation alone. Thus, the minimum magnetic bias (H_{dc}) should be sufficient to move the domain walls entirely to one side of the ferrite specimen. H_{dc} should also be reasonably uniform over the ferrite volume.

To avoid needless dielectric losses in the ferrite, it should be shielded from the E_{rf} field in the cavity while being exposed to the H_{rf} field. This is accomplished in the cavity shown in Figure 2 by sandwiching 1 cm thick copper cooling rings between the 2 cm thick ferrite rings in the tuner assembly.

The choice of ferrite ring size involves consideration of maximum rf flux levels, uniformity of flux level in the material, bias supply requirements, and dimensional resonance in the ferrite in which wavelengths can be quite short due to μ and ϵ both being on the order of 10 times that of vacuum. In practice, the ratio of o.d. and i.d. of the ferrite rings should not exceed 1.5 to 1. The maximum rf flux in the ferrite should not exceed a level which would result in ferrite heating averaged over the operating cycle in excess of 1 watt/cm^3.

To obtain a system which makes the most economical use of ferrite, the power supply cost to obtain the biasing field H_{dc} must be compared to the cost of rf power generation to reach an overall cost minimization.

RF Design

One type of accelerating structure commonly used in particle accelerators is the standing-wave coaxial line cavity resonator. A tunable form of this structure type is one which has one or more accelerating gaps in regions of high electric field and which contains a quantity of ferrite material in regions of high rf magnetic field. The regions of rf magnetic field containing the ferrite may be thought of as tuner assemblies which may be used to vary the resonant frequency of the cavity. The resonant frequency of the cavity is varied over the required schedule by adjusting the rf permeability, μ_Δ, of ferrite rings contained in each of the tuner assemblies. To adjust the ferrite permeability, a slowly-changing magnetic field, H_{dc}, is impressed in the tuner assemblies.

For purposes of rf power loss analysis, the cavity may be considered as a set of coaxial transmission line segments joined together to form a resonant circuit. There is an open termination (loaded by a small capacitance) at each accelerating gap, and a short-circuit termination at the end of each ferrite-loaded tuner assembly.[1] In addition to the obvious transmission line segments which can be identified with sections of the cavity, the resonant circuit includes the output circuit of the rf power amplifier (the output circuit of the power amplifier is substantially a fixed capacitance of 50 - 100 pF for calculation of resonance). If one cuts the resonant circuit into two sections at any place in the system across which energy flows, resonance is characterized by having the reactance of the two sections equal in magnitude and opposite in sign.

The transmission line segment corresponding to a tuner assembly merits special attention since it is partially loaded with the variable μ_Δ ferrite, and is responsible for tuning the resonant frequency of the system. We may consider the tuner as a shorted transmission line less than a quarter wavelength long which presents a pair of terminals to the remainder of the system. This transmission line, even if inhomogeneous in

μ and ε, and non-uniform in cross-section may be replaced for purposes of analysis by a uniform homogeneous line which presents the same reactance at its terminals and has the same physical length as does the tuner. Then,

$$X_{tuner} = X_{uhl} = Z_c \tan \frac{\omega h}{v}$$

where

X = reactance
h = length of uniform homogeneous line = length of tuner
Z_c = characteristic impedance of uniform homogeneous line
v = phase velocity in uniform homogeneous line.

The subscript uhl indicates the equivalent uniform homogeneous line.

As a first step in the analysis of a cavity, functions relating Z_c and v to μ_Δ and the geometric characteristics of the tuner assembly must be derived for the particular cavity configuration chosen. This may be done by finding an expression for the inductance per unit length L' and for the capacitance per unit length C' which adequately approximate these functions in the tuner being analyzed. Then, Z_c and v may be obtained as

$$Z_c = \sqrt{\frac{L'}{C'}}$$

$$v = \frac{1}{\sqrt{L' C'}} .$$

At any required resonant frequency ω one may obtain the reactance of the transmission line elements representing the parts of the cavity other than the tuner by using straight-forward transmission line impedance relations. It is then required for resonance that the tuner present a reactance equal in magnitude, and opposite in sign. At any frequency ω the reactance of the tuner depends upon its length h, and the ferrite rf permeability μ_Δ. One starting point for a ferrite tuner design is the choice of a particular value of μ_Δ at some frequency in the required tuning range. A logical choice is to fix the minimum value of μ_Δ desired at the highest resonant frequency required. As one approaches a ferrite μ_Δ of 1.0 by increasing the magnetic field, the biasing current required increases rapidly, (see Figure 1), so a choice of a minimum μ_Δ must include a consideration of the biasing current requirements, which we discuss later.

Having fixed upon a $\mu_{\Delta min}$ at ω_{max}, one may obtain the tuner length then as

$$h = \frac{v}{\omega} \arctan \frac{X}{Z_c}$$

where v and Z_c are functions of μ_Δ. At any other frequency in the tuning range of the cavity, one may find the ferrite μ_Δ required using the functions relating X, Z_c, v, and μ_Δ.

The rf power absorbed by the ferrite used to tune the cavity is of great interest when one is designing a system using ferrite-tuned cavities. The energy stored in the ferrite depends upon the voltage required at the accelerating gaps, and upon the ferrite μ_Δ calculated to resonate the system at the required frequency. From experimentally determined curves (see Figure 1) of ferrite Q vs μ_Δ, and the ferrite stored energy U, the rf power loss is obtained as

$$P = \frac{\omega U}{Q} .$$

An accelerating cavity which has been designed and analyzed by the above procedure is shown in Figure 2. This cavity contains two accelerating gaps connected by a half-wavelength drift tube. The H_{dc} necessary for changing the ferrite permeability is obtained by passing a current through the coaxial conductors which contain the ferrite rings. For this particular design,

$$Z_c = 2/3 \quad \psi Z_{oa}$$

$$v = \frac{c}{\psi}$$

$$\psi = 3/4 + \mu_\Delta \frac{Z_{of}}{Z_{oa}}$$

where,

$$Z_{oa} = \frac{1}{2\pi}\sqrt{\frac{\mu_o}{\varepsilon_o}} \ln \frac{43}{36} , \quad Z_{of} = \frac{1}{2\pi} \sqrt{\frac{\mu_o}{\varepsilon_o}} \ln \frac{64}{43} .$$

The rf energy stored in the ferrite in each tuner is

$$U = \frac{\mu_\Delta Z_{of}}{6} \left[\sin\left(\psi\frac{\omega h}{c}\right) \cos\left(\psi\frac{\omega h}{c}\right) + \psi\frac{\omega h}{c}\right] I_s^2$$

where I_s is the peak rf current at the short-circuit termination of the tuner.

Table I lists the cavity parameters for an 18 cps rapid-cycling proton synchrotron. Figure 3 illustrates the variation of cavity shunt resistance with ferrite biasing.

The shape of the beam loading resistance curve is characteristic of any rapid cycling proton synchrotron while the absolute magnitude of this curve is determined by the beam intensity chosen for our design illustration.

Bias Supply Design

The rf design discussed above provides a schedule of the rf incremental permeability required as a function of time to tune the accelerator cavity. Reference to the experimentally determined relation between H_{dc}, the slowly changing magnetization, and μ_Δ, the rf permeability then provides a schedule of H_{dc} for a particular type of ferrite material (see Figure 1). Assume the ferrite is in the form of a toroid. The generation of a slowly changing magnetization

requires current in conductors arranged so as to produce a circumferential magnetic field in the ferrite that is to tune the accelerator cavity. In the case of a coaxial resonator with a short at one end, the choice of the inner and outer conductors as the low frequency current path results in the desired circumferential magnetic field in the region between the coaxial conductors. For the one turn bias circuit, the magnetic field intensity in the region between the conductors is given by,

$$H_{dc} = \frac{I}{2\pi r} \text{ amperes/meter}$$

where,

I is the direct current, in amperes, in the conductors.
r is the radial displacement, in meters, from the center line of the coaxial system.

From the above equation, it is noted that the ferrite requiring the least H_{dc} to obtain a given rf μ_Δ will require the least energy from the bias supply, hence, the least costly bias supply.

The rf μ_Δ versus H_{dc} curves are obtained from measurements on toroids of rectangular cross section where H_{dc} is defined as the magnetization intensity at a specified magnetic radius called $\bar{r}$,

$$\bar{r} \equiv \frac{r_2 - r_1}{\ln(r_2/r_1)}$$

where,

r_1 is the inner radius of the rectangular toroid.
r_2 is the outer radius of the rectangular toroid.[2]

The bias current required is proportional to $\bar{r}$. Therefore, one should make r_2 and r_1 as small as the rf considerations allow. Using $\bar{r}$ and the schedule of H_{dc} versus time required, one may determine a schedule of current required versus time.

Determination of Required Voltage

The circuit representation of the coaxial bias supply conductors is equivalent to a lumped-parameter circuit consisting of a resistance, a fixed air-core inductance, and a ferrite-core inductance. The ferrite-core inductance value depends on the incremental permeability of the ferrite at the bias supply frequency. The permeability ($\mu_{\Delta dc}$) may be determined from the slope of the B_{dc} - H_{dc} curve at the desired magnetization. The bias supply voltage as a function of time may be calculated using the current schedule, the fixed circuit parameters, and the slope of the B_{dc} - H_{dc} curve to determine the ferrite-core inductance at each value of H_{dc}.

The designer may choose a bidirectional bias system that drives the ferrite from H_1 to H_2 on one acceleration cycle (see Figure 4), and from $-H_1$ to $-H_2$ on the next acceleration cycle, or a unidirectional bias supply which drives the ferrite between H_1 and H_2 in the first quadrant only. In either case, it may be desired to supply the reactive volt-ampere component of the bias from a suitable resonant circuit configuration.

In the case of a bidirectional bias system, the energy lost in the ferrite in each bias cycle (two accelerator cycles) is represented by the area enclosed by the hysteresis loop. Such a system (Case I) would have to supply sufficient energy to supply the circulating bias current plus the energy lost in the ferrite and I^2R losses in the coaxial conductors.

In the case of a unidirectional bias system (Case II), a current which changes in magnitude, but not direction, is supplied to drive the ferrite from H_1 to H_2, and back. The energy lost in the ferrite is represented by a minor hysteresis loop between P_1 and P_2, which is quite small for the operating range of μ_Δ usually selected and the ferrite materials investigated for use in accelerator cavities.

Illustration of a Particular Design

To illustrate the above discussion, the accelerator cavity design shown in Figure 2 was investigated for each of the two modes of operation discused. The dc resistance of the cavity bias current path is obtained by summing the resistance of its parts. The path includes a 1/2 inch thick copper inner conductor, a 1/2 inch thick copper shorting plate, a 1/2 inch thick copper outer conductor, and portions of the tank walls. To give an idea of the necessary currents, one notes that the rf μ_Δ range as determined from the rf considerations is 6.27 to 1.50. The required H_1 is thus 4.78 kiloamperes/meter, and the H_2 is 28.1 kiloamperes/meter (for a typical ferrite material). As seen from Figure 2, the inner radius of the ferrite is 0.215 meters, and the outer radius is 0.32 meters, hence the required currents reach 46 kiloamperes.

Case I

For a bidirectional current bias supply, the energy lost per accelerator cycle in the ferrite is represented by one-half the area enclosed by the ferrite hysteresis loop (note that we distinguish between accelerator guide field cycle, and bias supply cycle).

Over the range of frequencies (dc to 60 cps) considered for rapid-cycling accelerator operation we have used an experimentally-determined formula to represent the hysteresis loop area. For the ferrite under discussion, the energy loss per accelerator cycle (twice the bias supply frequency) is given by,

$$U_f = 299 \ln(f) + 206$$

where,

U_f = ferrite energy loss in joules per cubic meter.
f = accelerator repetition frequency in cps.

In an 18 cps accelerator, using cavities described in Table I, the bias supply energy lost in the ferrite per accelerator cycle is 129 joules per cavity.

The rms current required to achieve the desired magnetization is 32.4 kiloamperes. If the calculated current waveform is decomposed into its Fourier series representation, it is seen that no significant energy is required at frequencies higher than 27 cps. At this frequency, the skin effect increase in the dc resistance of the bias circuit conductors is approximately 9%. The conductor energy loss per accelerator cycle at any frequency f may be written for this example as

$$U_R = \frac{3.68 \times 10^3}{f} + \frac{78}{f^{1/2}}$$

where,

U_R = I^2R loss per cavity in joules.

This is 223 joules per cycle for the case of the 18 cps accelerator.

The recoverable energy required to bias the ferrite to the rf μ_Δ required is represented by the area $B_r - P_1 - P_2 - B_2$ on the ferrite hysteresis loop, Figure 4. This energy (area) does not change appreciably over the range of accelerator operating frequencies considered. An energy of 1,320 joules per cubic meter is required for the ferrite considered in this design.

The total real power that must be supplied to the accelerator cavity by the bias supply is given by the product of the total energy losses per cycle and the operating frequency. For the 18 cps accelerator in our example, the real power demand of the bias system is 6.38 KW per cavity. In addition, 2.88 KVA of circulating power must be supplied per cavity.

Case II

In the case of a unidirectional current supply, the energy lost per accelerator cycle in the ferrite is represented by a minor hysteresis loop between P_1 and P_2. The change in minor loop area is not significant with frequency. For the ferrite under discussion, the energy lost per cycle is 66 joules per cubic meter.

Figure 5 shows the calculated bias current and voltage waveforms required for the sample cavity design. A Fourier series representation of the bias current waveform is,

$$I(t) = 29.8 - 20.9 \cos(\omega t + 0.178) - 4.48 \cos(2\omega t + 0.130) + 0.926 \cos(3\omega t + 2.45) - 0.065 \cos(4\omega t + 0.914) + \ldots\ldots$$

where,

$I(t)$ is the bias current in kiloamperes at time t (in seconds).
$\omega = 2\pi f$
f = the accelerator repetition frequency in cps.

The same rms current is required as in Case I, as the rf μ_Δ range desired is the same. The calculated bias current waveform differs from Case I. In an 18 cps accelerator no significant energy is carried by frequency components higher than 36 cps. The skin effect increase in dc resistance at this frequency is 19%, and the I^2R energy loss per accelerator cycle may be written,

$$U_R = \frac{3.68 \times 10^3}{f} + \frac{164}{f^{1/2}}$$

where the definitions of symbols used in Case I apply. The joule heating loss in the copper conductors at 18 cps is 244 joules per cavity per accelerator cycle.

The recoverable energy required in this case is represented by the area $B_r - P_1 - P_2 - B_2$ (see Figure 4). For the ferrite considered, 1,300 joules per cubic meter are required per cavity. This energy requirement does not change appreciably with frequency.

In this case, the real power demand per cavity in an 18 cps accelerator is 4.52 kW. The reactive power that must be supplied is 2.83 KVA.

A summary of the bias power requirement per cavity for an 18 cps accelerator is presented below:

	Case I Bidirectional Current	Case II Unidirectional Current
Bias Circuit Copper Loss	4.01 kW	4.38 kW
Hysteresis Power Loss in the Ferrite	3.32 kW	0.144 kW
Required Circulating Volt/Amperes	2.88 KVA	2.83 KVA
Cavity Bias Power Demand (Peak Volts Times Peak Amperes)	9.21 KVA	7.35 KVA

References

[1] Whinnery, J. R., Jamieson, H. W., and Robbins, T. E., "Coaxial Line Discontinuities", Proc. Inst. Radio Engineers, 1944, 32, 695-709.

[2] Katz, J. E., and Kerns, Q. A., UCID 10133, AS/Main Ring/04, August 28, 1964

TABLE I

CAVITY PARAMETERS

Ferrite Tuners - Totals for two tuners/cavity	
Ferrite density	4.7 gm/cm^3
Ferrite weight	1,250 lbs.
Ferrite volume	121,000 cm^3
Weight of copper cooling rings	1,250 lbs.
Resistance of bias circuit at 36 cps, 23°C	8.3 micro-ohms
Maximum $H_{dc} = \frac{47,200 \text{ amps}}{1.68 \text{ meters}}$	28.1 kiloamperes/meter
Minimum $H_{dc} = \frac{8,030 \text{ amps}}{1.68 \text{ meters}}$	4.78 kiloamperes/meter
Ferrite μ_Δ injection	6.3
Ferrite μ_Δ ejection	1.5
RF Parameters	
Cavity peak voltage (across 2 gaps/cavity)	53 kV
Axial field strength in gap, $\frac{V}{X} = \frac{53 \text{ kV}}{20 \text{ cm}}$	2.7 kV/cm
Cavity rf current (at current maximum)	910 amperes
Cavity Z_o (tapers from 80 Ω at gap to 20 Ω at center)	60 ohms
H_{rf} (at location of ferrite)	540 amperes/meter

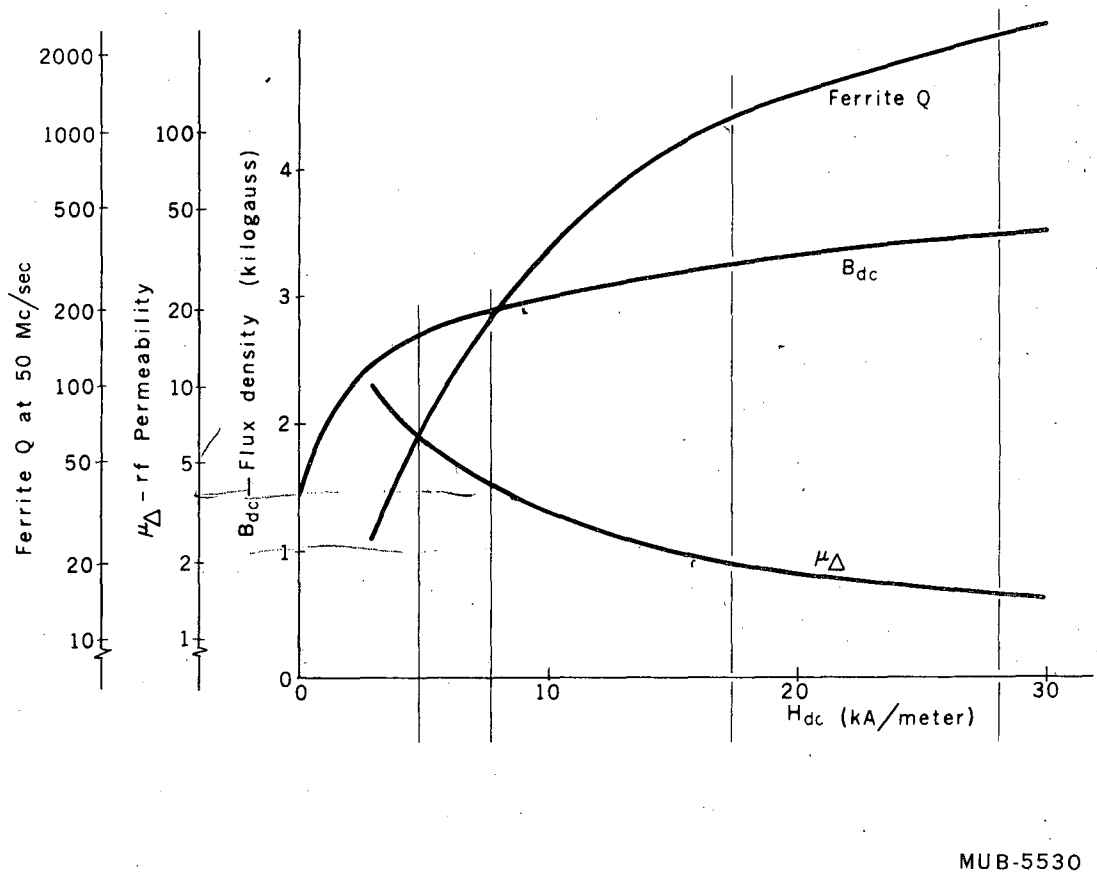

Fig. 1. Ferrite characteristics.

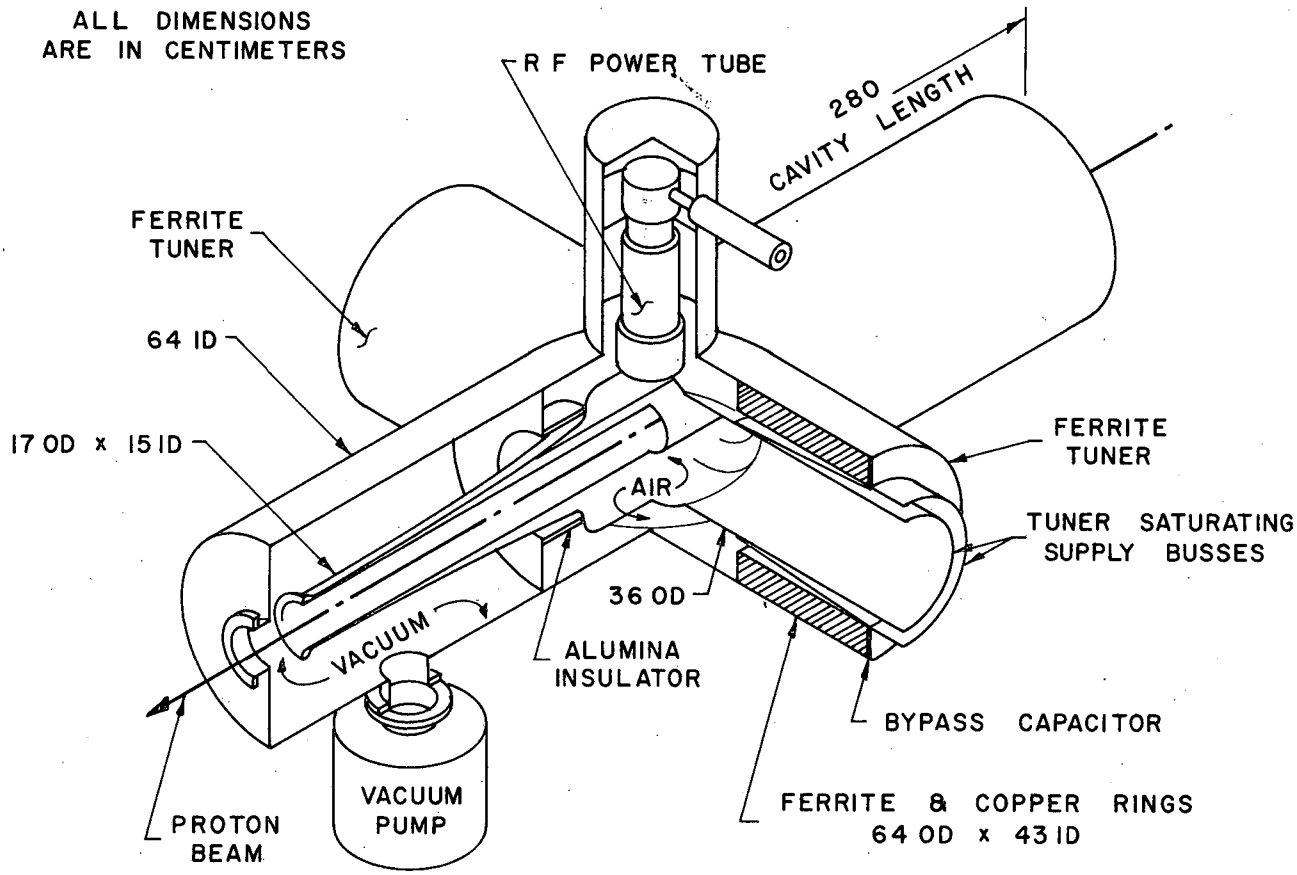

Fig. 2. Coaxial ferrite-tuned resonator.

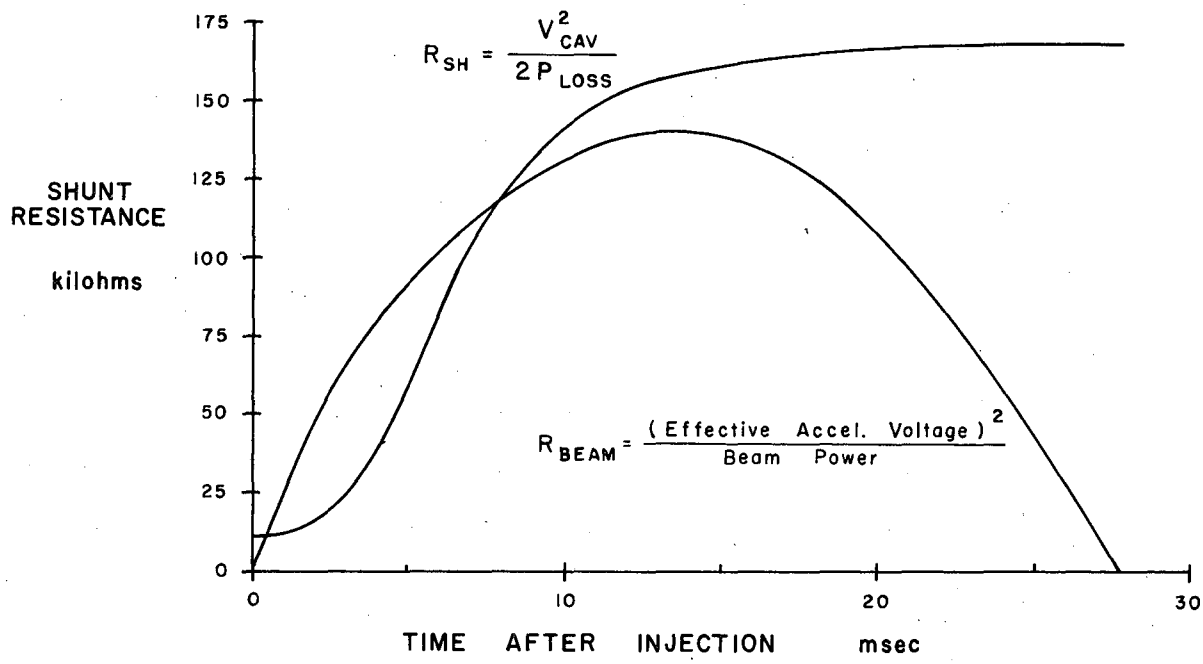

MUB-5532

Fig. 3. Proton synchrotron cavity shunt resistance and beam resistance.

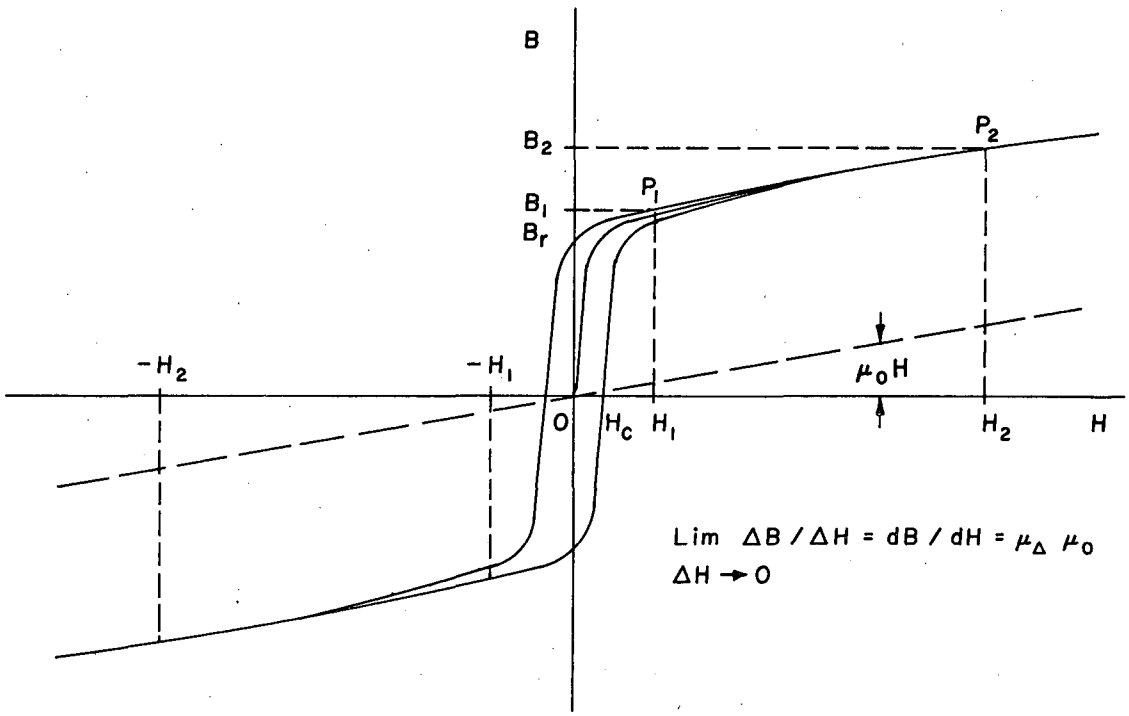

MUB-5533

Fig. 4. Typical hysteresis loop.

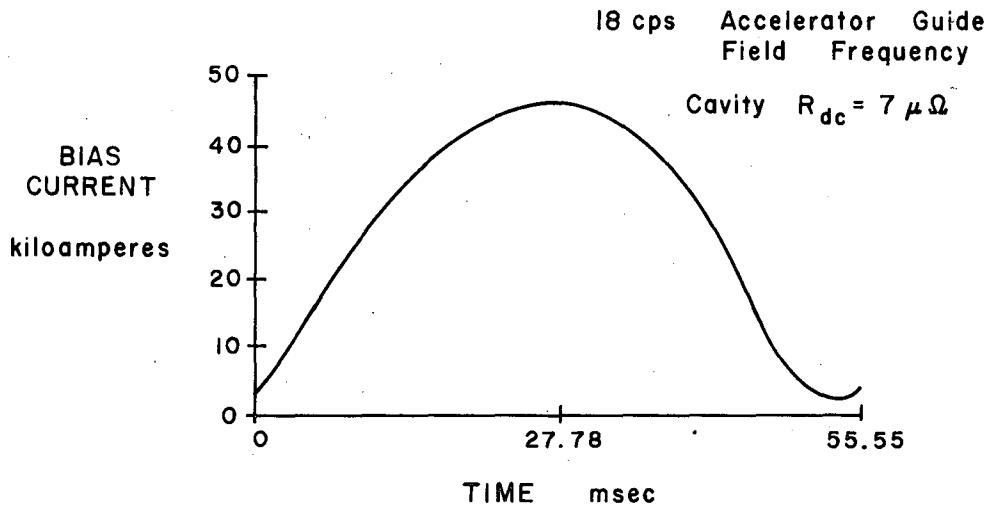

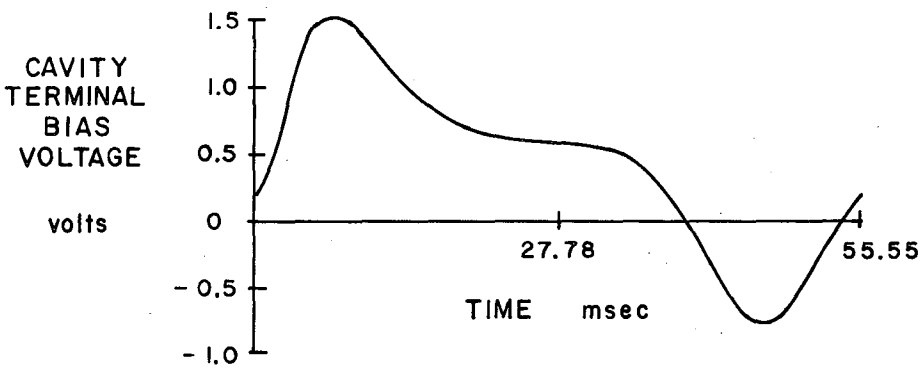

MUB-5534

Fig. 5. Bias current and voltage waveforms.

This report was prepared as an account of Government sponsored work. Neither the United States, nor the Commission, nor any person acting on behalf of the Commission:

A. Makes any warranty or representation, expressed or implied, with respect to the accuracy, completeness, or usefulness of the information contained in this report, or that the use of any information, apparatus, method, or process disclosed in this report may not infringe privately owned rights; or

B. Assumes any liabilities with respect to the use of, or for damages resulting from the use of any information, apparatus, method, or process disclosed in this report.

As used in the above, "person acting on behalf of the Commission" includes any employee or contractor of the Commission, or employee of such contractor, to the extent that such employee or contractor of the Commission, or employee of such contractor prepares, disseminates, or provides access to, any information pursuant to his employment or contract with the Commission, or his employment with such contractor.