UCRL-11802

University of California

Ernest O. Lawrence Radiation Laboratory

TWO-WEEK LOAN COPY

This is a Library Circulating Copy which may be borrowed for two weeks. For a personal retention copy, call Tech. Info. Division, Ext. 5545

ANALYSIS OF ELLIPTICALLY POLARIZED LIGHT

Berkeley, California

DISCLAIMER

This document was prepared as an account of work sponsored by the United States Government. While this document is believed to contain correct information, neither the United States Government nor any agency thereof, nor the Regents of the University of California, nor any of their employees, makes any warranty, express or implied, or assumes any legal responsibility for the accuracy, completeness, or usefulness of any information, apparatus, product, or process disclosed, or represents that its use would not infringe privately owned rights. Reference herein to any specific commercial product, process, or service by its trade name, trademark, manufacturer, or otherwise, does not necessarily constitute or imply its endorsement, recommendation, or favoring by the United States Government or any agency thereof, or the Regents of the University of California. The views and opinions of authors expressed herein do not necessarily state or reflect those of the United States Government or any agency thereof or the Regents of the University of California.

UCRL-11802
UC-4, Chemistry
TID-4500 (45th Ed.)

UNIVERSITY OF CALIFORNIA

Lawrence Radiation Laboratory
Berkeley, California

AEC Contract No. W-7405-eng-48

ANALYSIS OF ELLIPTICALLY POLARIZED LIGHT

Rolf H. Muller and J. Richard Mowat

October 1965

Printed in USA. Price $4.00. Available from the Clearinghouse for Federal Scientific and Technical Information, National Bureau of Standards, U. S. Department of Commerce, Springfield, Virginia.

ANALYSIS OF ELLIPTICALLY POLARIZED LIGHT

Rolf H. Muller and J. Richard Mowat*

Inorganic Materials Research Division
Lawrence Radiation Laboratory
University of California, Berkeley, California

ABSTRACT

The measurement of elliptically polarized light, a tool for the study of reflecting surfaces, results in quantities from which the characteristics of the polarization have to be computed. Equations are derived which furnish the geometrical properties of the ellipse (orientation and ellipticity) and the physical parameters of two orthogonal component waves (phase difference and amplitude ratio) from data obtained using compensator and intensity techniques.

---

* Also with the Department of Physics, University of California, Berkeley, California.

ANALYSIS OF ELLIPTICALLY POLARIZED LIGHT

CONTENTS

Abstract iii

Introduction 1

A. Polarization 1

B. Definition of Elliptic Parameters 2

C. Analysis by Compensation 3

D. Analysis of Intensity 4

Chapter One: Linear Polarization Incident 5

I. Determination of Relations Between Δ, ψ, θ, γ By Use Of Conjugate Radii 5

A. Superposition of Linearly Polarized Light 5

B. Conjugate Radii 7

C. Dependence of Handedness Upon Δ 8

D. Derivation of Equations 9

E. Discussion of Equations (18),(27),(29),(30) and Determination of Ambiguous Signs 16

Summary 24

II. Determination of Relations Between Δ, ψ, θ, γ By Use of the Poincaré Sphere 25

A. Definitions of θ, γ, $\omega t = 0$ 25

B. Derivation of Equations 26

C. Poincaré Interpretation 29

D. Interpretation of Phase Differences 30

Summary 31

Contents (continued)

III. Correction For Inexact Sénarmont Compensator 32

A. Interpretation of Actual Retardation δ 33

B. Derivation of Alternate Equations 36

C. Calibration of Quarter Wave Plate 37

Summary 40

Chapter Two: Elliptic Polarization Incident 42

I. Description of Optical System 42

II. Derivation of Equations 43

Summary 48

Chapter Three: Intensity Analysis 49

I. Fraction of State P That is Passed by Elliptic Analyzer of State A 49

II. Intensity Method for Determining Δ and ψ With Linear Incidence 55

III. Interpretation of Intensity Measurements 59

IV. Intensity Method for Determining Δ and ψ With Elliptic Incidence 62

A. Exact Compensator 66

B. Inexact Compensator 70

Appendix: Spherical Trigonometry 72

Appendix Figure Captions 73

Figure Captions 74

Figures 79

Acknowledgments 107

References 108

INTRODUCTION

The reflection of polarized light from an interface results in a change of the polarization state which is characteristic of the optical properties of the interface. Two cases of particular interest will be considered in detail. They pertain to the use of linearly polarized incident light which results, in general, in an elliptically polarized reflected wave and elliptic incidence which results in linear reflection.

In the following analysis, light is treated as transverse electromagnetic radiation with plane wave fronts. These conditions are met by a parallel, monochromatic beam several wavelengths away from the source. For considerations of the state of polarization only the electric vector is considered although the magnetic vector is equally important for the wave propagation. (Fig. 1a)

A. Polarization

In linearly polarized light propagating toward the observer the tip of the electric vector seems to oscillate along a straight line (Fig. 1b). This oscillation may be resolved into two linear components vibrating in phase along the coordinate axes x and y (Fig. 2). When the tip of the oscillating electric vector as seen by an observer looking toward the source appears to trace out an ellipse the light is said to be elliptically polarized. Elliptically polarized light can also be decomposed into two linear components along perpendicular axes, but the components, do not oscillate in phase (Fig. 3). The instantaneous representation of the wave is a helix in space moving in the propagation direction and hereby tracing out an ellipse in a fixed plane normal to the propagation direction. If, to the observer, the tip of the electric

vector travels around the ellipse in a clockwise fashion, the light is said to have right-hand or negative polarization. A counter-clockwise rotation is called left-hand or positive polarization. The handedness of the oscillation depends upon the phase difference Δ between the orthogonal components, as shown in Figs. 5 and 6 and Table I. When Δ is an integral multiple of π the vibration is linear.

Table I. Elliptic polarization, sense of rotation and Phase difference between orthogonal components

Phase Difference	
$-2\pi < \Delta < -\pi$	$-\pi < \Delta < 0$
$0 < \Delta < \pi$	$\pi < \Delta < 2\pi$
$2\pi < \Delta < 3\pi$	$3\pi < \Delta < 4\pi$
etc.	etc.
Ellipticity	
left handed	right handed
counter clockwise	clockwise
positive	negative

B. Definition of Elliptic Parameters

An elliptic polarization can be specified by the physical parameters phase difference Δ and amplitude ratio

$$\frac{B(y)}{A(x)} \equiv \tan\psi \quad \geq ,0$$

of the x and y components. The phase difference Δ is defined in terms of the absolute phase of the components as

$$\Delta = \delta_x - \delta_y$$

and can assume positive and negative values, while the amplitude ratio of the y and x components is always positive.

An alternate description of the ellipse is possible in terms of its geometric parameters θ and γ, expressing its orientation and shape. θ is the angle between the x axis and the major axis of the ellipse, and

$$\tan \gamma \equiv \pm\frac{b}{a}$$

is the ratio of the minor and the major half axis of the ellipse. The plus sign is used for left-hand polarization, and the minus sign for right-hand polarization. Figure 7 shows how the parameters θ, γ, ψ, are related to the trace of the ellipse and the x-y coordinate system.

C. Analysis by Compensation

Two devices for analyzing elliptically polarized light involve a compensation of the phase difference Δ between the x and y components until linear polarization is restored, which is recognized by complete extinction with an analyzer.

The device to be employed here is the Sénarmont compensator or "quarter wave plate". The feature of this compensator is that the optical paths for polarization along two perpendicular axes differ by $\lambda/4$. If the elliptic vibration is considered to result from components along the major and minor axes of the ellipse which oscillate out of phase by $\pi/2$ or $\lambda/4$ then, introducing a quarter wave compensator with axes which coincide with the ellipse half-axes (u-v coordinate system in Fig. 7) results in a phase difference of 0 or π. Thus, the elliptic vibration is transformed into a linear one. The settings, with respect to the x axis, of the compensator axes and a nicol prism adjusted to extinguish the linearly polarized light give the parameters θ and γ.

An alternate compensating technique, not to be discussed in detail, employs a variable BABINET or SOLEIL compensator which allows the introduction of a phase difference between x and y components which can be adjusted until linear polarization results and, thus, allows to determine Δ directly. The angular position of the quarter wave plate can, however, be determined with much greater accuracy than the linear position of a variable compensator.

Compensating techniques are very precise but slow because the correct instrument readings have to be found by successive approximation.

D. Analysis of Intensity

Since the intensity of linearly polarized light is proportional to the square of the amplitude, the amplitude ratio $\tan\psi$ can be directly determined from an intensity measurement of the components along the x and y axes. A rotating analyzer (nicol prism) followed by a photodetector can be used for this measurement. The transmission direction of the analyzer at maximum intensity also gives the orientation θ of the major axis of the ellipse. Intensity methods have the practical advantage of yielding values for Δ and ψ quickly, which is important for the observation of transient phenomena. However, the accuracy is lower than that possible by compensating techniques.

CHAPTER ONE. LINEAR POLARIZATION INCIDENT

I. DETERMINATION OF RELATIONS BETWEEN Δ, ψ, θ, γ BY USE OF CONJUGATE RADII

When linearly polarized light is reflected from a metal surface, the reflected light is, in general elliptically polarized. This elliptical oscillation is characterized by the angle θ between the x axis (chosen to be parallel to the plane of incidence) and the major ellipse axis and by the ratio of minor to major axes defined to be tan γ (Fig. 7).

The components of the elliptical vibration parallel to the major and minor axes of the ellipse oscillate with the same frequency ω but the component along the major axis differs in phase with that along the minor axis by $\pi/2$. Thus, if the light is passed through a quarter wave plate (Sénarmont Compensator) the fast axis of which is parallel to the minor axis of the ellipse a phase difference of $\pi/2$ will be added or subtracted producing linearly polarized light along the restored direction $\theta+\gamma$ from the x axis (r in Fig. 7). If the quarter wave plate is followed by a linear analyzer, extinction of the beam will result when the extinction direction forms the angle $\theta+\gamma$ with the x axis. The measured angles θ and γ can be related to the phase difference Δ between the x and y components of the elliptical oscillation parallel and normal to the plane of incidence, and to the ratio $\tan\psi$ of the amplitude along the y direction to that along the x direction.

A. Superposition of Linearly Polarized Light*

An elliptically polarized wave propagating in the z direction can be interpreted as the resultant vector of two orthogonal linearly

* A similar discussion is given in references 1, 2, and 3.

polarized sinusoidal compenents in the x-z and y-z planes, as indicated in Fig. 3 and described by the parametric equations (1) and (2) below

The coordinates x and y are used to designate the two orthogonal components of the electric light vector parallel and normal to the plane of incidence.

$$E_x = A \cos \left[\omega \left(t' - \frac{z}{v} \right) + \delta_x \right] \tag{1}$$

$$E_y = B \cos \left[\omega \left(t' - \frac{z}{v} \right) + \delta_y \right] \tag{2}$$

with the phase difference Δ between the two waves being

$$\Delta \equiv \delta_x - \delta_y \tag{3}$$

and by redefining the origin of time such that

$$\omega t = \omega \left(t' - \frac{z}{v} \right) + \delta_y \tag{4}$$

the components become

$$E_x = A \cos (\omega t + \Delta) \tag{1a}$$

$$E_y = B \cos \omega t \tag{2a}$$

The dependence on time is eliminated as follows

$$\cos \omega t = \frac{E_y}{B}$$

$$\sin \omega t = 1 - \frac{E_y^2}{B^2} \tag{2b}$$

$$E_x = A (\cos \omega t \cos \Delta - \sin \omega t \sin \Delta)$$

$$E_x = A \left(\frac{E_y}{B} \cos \Delta - 1 - \frac{E_y^2}{B^2} \sin \Delta \right)$$

$$\frac{A\,E_y}{B}\cos\Delta - E_x = A \quad 1- \frac{E_y^{\,2}}{B^2} \quad \sin\Delta$$

$$\frac{A^2E_y^{\,2}}{B^2}\cos^2\Delta + x^2 - \frac{2AE_x - E_y\cos\Delta}{B} = A^2\left(1-\frac{E_y^{\,2}}{B^2}\right)\sin^2\Delta$$

$$\frac{A^2E_y^{\,2}}{B^2} + E_x^{\,2} - \frac{2E_xE_y\cos\Delta}{B} = A^2\sin^2\Delta$$

$$\frac{E_y^{\,2}}{B^2} + \frac{E_x^{\,2}}{A^2} - \frac{2E_xE_y\cos\Delta}{AB} = \sin^2\Delta \qquad (5)$$

The ellipse described by (5) is the projection of the tip of the resulting electric vector (a helix in space) on the x-y plane normal to the propagation direction, looking toward the light source (see Fig. 4).

B. Conjugate Radii

From equations (1a), (2a) the electric vector in the x-y plane can be expressed as

$$\vec{E} = A\cos(\omega t + \Delta)\,\hat{\imath} + B\cos\omega t\,\hat{\jmath} \qquad (6)$$

where $\hat{\imath}$ and $\hat{\jmath}$ are unit vectors in the x and y directions respectively. Rewriting (6) results in

$$\vec{E} = A(\cos\omega t\cos\Delta - \sin\omega t\sin\Delta)\,\hat{\imath} + B\cos\omega t\,\hat{\jmath}$$

$$\vec{E} = (A\cos\Delta\,\hat{\imath} + B\hat{\jmath})\cos\omega t - A\sin\Delta\,\hat{\imath}\sin\omega t \qquad (7)$$

or

$$\vec{E} = \vec{E}_1\cos\omega t + \vec{E}_2\sin\omega t \qquad (8)$$

where

$$\vec{E}_1 \equiv A \cos \Delta \, \hat{\imath} + B\hat{\jmath} \tag{9}$$

$$\vec{E}_2 \equiv -A \sin \Delta \, \hat{\imath} \tag{10}$$

The vectors $\vec{E}_1$ and $\vec{E}_2$ are conjugate radii of the ellipse.* $\vec{E}$ is the real part of

$$\vec{E}_c = (\vec{E}_1 \quad i \, \vec{E}_2) \, e^{-i\omega t} \tag{8a}$$

Another pair of conjugate radii are the principal radii $\vec{E}_u$, $\vec{E}_v$ shown in Fig. 8. They have the property that $\vec{E}_u \cdot \vec{E}_v = 0$. At some time t_o the electric vector coincides with the u axis. Then from (8),

$$\vec{E}_u = \vec{E}_1 \cos \omega t_o + \vec{E}_2 \sin \omega t_o \tag{11}$$

At $\omega t = \omega t_o + {}^{\pi}/2$ the electric vector coincides with the v axis, and

$$\begin{aligned} \vec{E}_v &= \vec{E}_1 \cos (\omega t_o + {}^{\pi}/2) + E_2 \sin (\omega t_o + {}^{\pi}/2) \\ \vec{E}_v &= -\vec{E}_1 \sin \omega t_o + \vec{E}_2 \cos \omega t_o \end{aligned} \tag{12}$$

C. Dependence of Handedness Upon Δ

From equations (1a), (2a) it is seen that at $\omega t = 0$, $E_x = A \cos \Delta$, $E_y = B$ and as shown in Fig. 8 the ellipse is tangent to the circumscribing rectangle AB (also tangent to the circumscribing parallogram determined by E_1 and E_2). From (8) it is seen that

* A reference for this treatment is 11. The choice of $e^{-i\omega t}$ instead of $e^{+i\omega t}$ is arbitrary, but is in keeping with the current practice.

$$\left.\frac{d\vec{E}}{dt}\right|_{t=0} = -\omega\vec{E}_1 \sin\omega t + \omega\vec{E}_2 \cos\omega t\Big|_{t=0} = \omega\vec{E}_2 .$$

That is, at time zero the change in the electric vector is parallel to

$$\vec{E}_2 = -A\,\hat{1}\,\sin\Delta \tag{10}$$

Thus the oscillation will be left-hand as shown in Fig. 8 for $\sin\Delta > 0$ and right-hand for $\sin\Delta < 0$. In terms of Δ, the rotation will be left-hand when $-2_\pi < \Delta < -\pi$, $0 < \Delta < \pi$, $2_\pi < \Delta < 3_\pi$, etc., and right-hand when $-\pi < \Delta < 0$, $\pi < \Delta < 2_\pi$, $3_\pi < \Delta < 4_\pi$, etc. as summarized in Table 1.

The influence of the phase difference Δ on shape, rotation and orientation of the ellipse, together with its sense of rotation is further illustrated in Figs. 5 and 6.

D. Derivation of Equations

Expressions will now be derived relating the measured parameters θ and γ to the physical quantities ψ and Δ. It will be assumed that the light incident on the reflecting surface is linearly polarized at 45° to the plane of incidence. Then

$$\tan\psi_{\text{incident}} \equiv \frac{B_{\text{incident}}}{A_{\text{incident}}} = 1$$

$$\Delta_{\text{incident}} \equiv \delta_{x_{\text{incident}}} - \delta_{y_{\text{incident}}} = 0$$

And the measured phase difference Δ and amplitude ratio $\tan\psi$

$$\tan\psi_{\text{reflected}} \equiv \frac{B_{\text{reflected}}}{A_{\text{reflected}}}$$

are determined completely by the reflecting surface. For incident linearly polarized light with general polarization direction the

relative amplitude ratio of the reflected light is

$$\tan \psi \equiv \frac{\tan \psi_{\text{reflected}}}{\tan \psi_{\text{incident}}} \tag{13}$$

In order to arrive at a self-consistent treatment it is important to carefully define all quantities. The definitions of θ and γ given below are compatible with the representation of elliptic oscillations in a Poincare sphere [4,5] on which latitude and longitude are used to represent 2γ and 2θ respectively.

$\theta \equiv$ angle between positive x axis and major axis of ellipse, measured counterclockwise $0 \leq \theta < \pi$

γ = angle between major axis of ellipse and restored polarization measured in the same sense as the rotation of the ellipse $-\frac{\pi}{4} \leq \gamma \leq +\frac{\pi}{4}$

Thus, γ is negative when the oscillation is right-hand and positive when the oscillation is left-hand. From (12) and $E_v = b$, $E_u = a$

$$\vec{E}_v \cdot \vec{E}_v + \vec{E}_u \cdot \vec{E}_u = b^2 + a^2 = E_1^2 \sin^2 \omega t_o + E_2^2 \cos^2 \omega t_o$$
$$- 2\vec{E}_1 \cdot \vec{E}_2 \cos \omega t_o \sin \omega t_o + E_1^2 \cos^2 \omega t_o$$
$$+ E_2^2 \sin^2 \omega t_o + 2\vec{E}_1 \cdot \vec{E}_2 \sin \omega t_o \cos \omega t_o$$

with (9), (10)

$$= E_1^2 + E_2^2 = A^2 \cos^2 \Delta + B^2 + A^2 \sin^2 \Delta$$
$$= A^2 + B^2$$
$$\therefore a^2 + b^2 = A^2 + B^2 \tag{14}$$

A second relation between a,b,A,B with $\hat{k}$ being a unit vector in the z direction can be obtained as follows:

$$\vec{E}_u \times \vec{E}_v = a\ b\ \sin {}^{\pi}/2\ \hat{k} = -\ \vec{E}_1 \times \vec{E}_1 \cos \omega t_o \sin \omega t_o$$

$$+ \vec{E}_1 \times \vec{E}_2 (\cos^2 \omega t_o + \sin^2 \omega t_o) + \vec{E}_2 \times \vec{E}_2 \sin \omega t_o \cos \omega t_o$$

$$= \vec{E}_1 \times \vec{E}_2 = AB \sin \Delta\ \hat{k}$$

$$\therefore\ ab = AB \sin \Delta \tag{15}$$

with the relations illustrated in Fig. 7,

$$\sin\gamma = \frac{b}{\sqrt{a^2 + b^2}} \qquad \cos\gamma = \frac{a}{\sqrt{a^2 + b^2}} \tag{16}$$

one obtains from the trigonometric identity

$$\sin 2\gamma = 2 \sin \gamma \cos \gamma \tag{17}$$

$$= \frac{2\ ab}{A^2 + b^2}$$

which is transformed with (14) and (15) into

$$\sin 2\gamma = \frac{2AB \sin\Delta}{A^2 \quad B^2}$$

$$= 2 \sin\Delta \frac{A}{\sqrt{A^2 + B^2}} \frac{B}{\sqrt{A^2 + B^2}}$$

$$= 2 \sin \Delta \sin \psi \cos \psi$$

$$= \sin \Delta \sin 2\ \psi$$

$$\therefore\ \sin 2\gamma = \sin 2\ \psi \sin \Delta \tag{18}$$

The following calculations are based on the relations shown in Fig. 8. From (9 - 11) and $t = t_o$

$$\vec{E}_u = (A\hat{\imath} \cos\Delta + B\hat{\jmath}) \cos \omega t_o - A\hat{\imath} \sin \Delta \sin \omega t_o$$

$$\hat{\imath} \cdot \vec{E}_u = A(\cos\Delta \cos\omega t_o - \sin\Delta \sin\omega t_o) = |\vec{E}_u| \cos \theta = a \cos \theta$$

$$\therefore\ a \cos\theta = A \cos \Delta \cos \omega t_o - A \sin \Delta \sin \omega t_o \tag{19}$$

$$\hat{j}\cdot\vec{E}_u = a\cos\left(\frac{\pi}{2} - \theta\right) = a\sin\theta = B\cos\omega t_o \tag{20}$$

From (9), (10), and (12)

$$\vec{E}_v = -(A\hat{i}\cos\Delta + B\hat{j})\sin\omega t_o - A\hat{i}\sin\Delta\cos\omega t_o$$

$$\hat{i}\cdot\vec{E}_v = -A(\cos\Delta\sin\omega t_o + \sin\Delta\cos\omega t_o) = |\vec{E}_v|\cos\left(\theta + \frac{\pi}{2}\right) = -b\sin\theta$$

$$\therefore\ b\sin\theta = A\cos\Delta\sin\omega t_o + A\sin\Delta\cos\omega t_o \tag{21}$$

$$\hat{j}\cdot\vec{E}_v = -B\sin\omega t_o = b\cos\theta \tag{22}$$

Elimination of ωt_o from (14) and (21) is achieved as follows:

$$a\cos\theta = A\cos\Delta\cos\omega t_o - A\sin\Delta\sin\omega t_o \tag{19}$$

$$b\sin\theta = A\sin\Delta\cos\omega t_o + A\cos\Delta\sin\omega t_o \tag{21}$$

The determinant of the coefficients of $\sin\omega t_o$ and $\cos\omega t_o$ is

$$\begin{vmatrix} A\cos\Delta & -A\sin \\ A\sin\Delta & A\cos \end{vmatrix} = A^2\cos^2\Delta + A^2\sin^2\Delta = A^2$$

Thus

$$\cos\omega t_o = \frac{1}{A^2}\begin{vmatrix} a\cos\theta & -A\sin\Delta \\ b\sin\theta & A\cos\Delta \end{vmatrix} = \frac{Aa\cos\theta\cos\Delta + AB\sin\theta\sin\Delta}{A^2}$$

$$\therefore\ A\cos\omega t_o = a\cos\theta\cos\Delta + b\sin\theta\sin\Delta \tag{23}$$

also

$$\sin\omega t_o = \frac{1}{A^2}\begin{vmatrix} A\cos\Delta & a\cos\theta \\ A\sin\Delta & b\sin\theta \end{vmatrix} = \frac{Ab\cos\Delta\sin\theta - aA\cos\theta\sin\Delta}{A^2}$$

$$\therefore\ A\sin\omega t_o = b\cos\Delta\sin\theta - a\cos\theta\sin\Delta \tag{24}$$

Multiply (20) by (24) to get

$$AB\cos\omega t_o\sin\omega t_o = ab\sin^2\theta\cos\Delta - a^2\sin\theta\cos\theta\sin\Delta \tag{25}$$

Multiply (22) and (23) to get

$$-AB \sin \omega t_o \cos \omega t_o = ab \cos^2\theta \cos \Delta + b^2 \sin\theta \cos\theta \sin\Delta \qquad (26)$$

Add (25) and (26)

$$0 = ab \cos\Delta + \frac{(b^2-a^2)}{2} \sin 2\theta \sin\Delta$$

$$\frac{a^2-b^2}{2} \sin 2\theta \sin\Delta = ab \cos\Delta$$

with

$$\frac{b}{a} = \tan \gamma \quad \text{(Fig. 7)}$$

$$\sin 2\theta \tan\Delta = \frac{2ab}{a^2-b^2} = \frac{\frac{2b}{a}}{1-\frac{b^2}{a^2}} = \tan 2\gamma$$

$$\tan 2\gamma = \sin 2\theta \tan\Delta$$

$$\tan \Delta = \frac{\tan 2\gamma}{\sin 2\theta} \qquad (27)$$

Squaring equation (27) yields

$$\tan^2\Delta = \frac{\tan^2 2\gamma}{\sin^2 2\theta}$$

With the use of the trigonometric identity

$$1+ \frac{1}{\tan^2 2\theta} = \frac{1}{\sin^2 2\theta} \qquad (28)$$

$$\tan^2\Delta = \tan^2 2\gamma \left(1+ \frac{1}{\tan^2 2\theta}\right)$$

$$= \frac{\sin^2 2\gamma}{\cos^2 2\gamma} \left(1 + \frac{1}{\tan^2 2\theta}\right)$$

$$\tan^2\Delta \cos^2 2\gamma = \sin^2 2\gamma \left(1 + \frac{1}{\tan^2 2\theta} \right)$$

$$\tan^2\Delta \, (1 - \sin^2 2\gamma) = \sin^2 2\gamma \quad \frac{\sin^2 2\gamma}{\tan^2 2\theta}$$

$$\tan^2\Delta - \tan^2\Delta \quad \sin^2 2\gamma = \frac{\sin^2 2\gamma}{\tan^2 2\theta} \quad \sin^2 2\gamma$$

$$\sin^2 2\gamma + \sin^2 2\gamma \quad \tan^2\Delta + \frac{\sin^2 2\gamma}{\tan^2 2\theta} = \tan^2\Delta$$

$$\left(1 + \tan^2\Delta + \frac{1}{\tan^2 2\theta} \right) \sin^2 2\gamma = \tan^2\Delta$$

$$\frac{1}{\cos^2\Delta} + \frac{1}{\tan^2 2\theta} = \frac{\tan^2\Delta}{\sin^2 2\gamma} = \frac{\sin^2\Delta}{\cos^2\Delta \sin^2 2\gamma}$$

$$1 + \frac{\cos^2\Delta}{\tan^2 2\theta} = \frac{\sin^2\Delta}{\sin^2 2\gamma} = \frac{1}{\sin^2 2\psi}$$

where the last step follows from equation (18). Again applying the identity (28),

$$1 + \frac{\cos^2 \Delta}{\tan^2 2\theta} = 1 + \frac{1}{\tan^2 2\psi}$$

$$\frac{\cos^2\Delta}{\tan^2 2\theta} = \frac{1}{\tan^2 2\psi}$$

$$\tan 2\theta = \pm \quad \tan 2\psi \quad \cos \Delta \tag{29}$$

From (18) and (29)

$$\sin\Delta = \frac{\sin 2\gamma}{\sin 2\psi}$$

$$\cos\Delta = \frac{\tan 2\theta}{\pm \tan 2\psi}$$

Δ is eliminated by squaring and adding

$$1 = \frac{\sin^2 2\gamma}{\sin^2 2\psi} + \frac{\tan^2 2\theta}{\tan^2 2\psi}$$

$$\sin^2 2\psi = \sin^2 2\gamma + \tan^2 2\theta \cos^2 2\psi$$

$$1-\cos^2 2\psi$$

$$1 = \sin^2 2\gamma + \cos^2 2\psi \, (\tan^2 2\theta+1)$$

with the trigonometric identity

$$\tan^2 2\theta + 1 = \frac{1}{\cos^2 2\theta}$$

$$1 = \sin^2 2\gamma + \frac{\cos^2 2\psi}{\cos^2 2\theta}$$

$$\cos^2 2\theta = \cos^2 2\theta \sin^2 2\gamma + \cos^2 2\psi$$

$$\cos^2 2\theta \, (1 - \sin^2 2\gamma) = \cos^2 2\psi$$

$$\cos^2 2\theta \cos^2 2\gamma = \cos^2 2\psi$$

$$\cos 2\psi = \pm\cos 2\gamma \cos 2\theta \tag{30}$$

E. Discussion of Equations (18), (27), (29), (30) and Determination of Ambiguous Signs

Case of $A \geqslant B$

With the angles defined as in Section ID

$$\theta \leq \theta < \pi$$

$$-\frac{\pi}{4} \leq \gamma \leq \frac{\pi}{4}, \quad \cos 2\gamma > 0$$

and the restriction that B be smaller than, or equal to A, it is readily seem from the ellipses of Fig. 5 that the only possible values of θ and ψ are

$$0 \leq \psi \leq \frac{\pi}{4} \qquad 0 \leq \theta < \frac{\pi}{4} \qquad B \leq A$$

$$\Longrightarrow \tan 2\psi > 0 \qquad \frac{3\pi}{4} < \theta < \pi$$

The correct signs in the Eqs. (18), (27), (29), and (30) can be determined by considering the resulting polarization as Δ is varied, using Fig. 5 as a check.

Case I. When $\Delta = n\pi$ n any integer

(18) $\sin 2\gamma = \sin 2\gamma \sin \Delta$ becomes

$\sin 2\gamma = 0 \Longrightarrow \gamma = 0$

which is true by Fig. 7 whenever $b = 0$ (linearly polarized light).

(27) becomes

$$\tan \Delta = 0 = \frac{\tan 2\gamma}{\sin 2\theta} \Longrightarrow \gamma = 0 \text{ as before}$$

(29) $\tan 2\theta = \pm \tan 2\psi \, (-1)^n$

but for linearly polarized light $\theta = \psi$ always. Thus $\tan 2\theta = \tan 2\psi$ and (29) should employ the positive sign to read

$\tan 2\theta = \tan 2\psi \cos \Delta$

(30) $\cos 2\psi = \pm \cos 2\gamma \cos 2\theta$

$1 = \pm \cos 2\gamma$ since $\theta = \psi$

$\cos 2\gamma > 0$ always since $-\frac{\pi}{4} \leq \gamma \leq \frac{\pi}{4}$

Therefore, the negative sign has no physical meaning.

Case II. When $\Delta = \frac{\pi}{2} + n\pi$ n any integer

(18) $\sin 2\gamma = \sin 2\psi \sin \Delta$

$= \pm \sin 2\psi$ when n is even

$-$ when n is odd

$\Longrightarrow \gamma = \pm \psi$ which is in agreement with Fig. 5.

(27) becomes $\tan \Delta = \infty$ or $\sin 2\theta = 0$, $\theta = 0$ as in Fig. 5.

(29) $\tan 2\theta = 0$ since $\cos \Delta = 0$ true since $\theta = 0$ by Fig. 5.

(30) $\cos 2\psi = \pm \cos 2\gamma \cos 2\theta$

$1 = \pm \cos 2\theta$ since $\cos 2\psi = \cos 2\gamma$

but $\cos 2\theta = 1$ since $\theta = 0$

Therefore, again, the positive sign only has physical meaning.

Case III. $0 < \Delta < \frac{\pi}{2}$

(18) $\sin 2\psi \sin \Delta = \sin 2\gamma$

$\sin \Delta > 0$

since $0 \leq \psi \leq \frac{\pi}{4}$ or $\sin 2\psi > 0$. Therefore, $\sin 2\gamma > 0$ or $2\gamma > 0$, which corresponds to left-hand polorization as seen in Fig. 5.

(27) $\tan \Delta = \frac{\tan 2\gamma}{\sin 2\theta}$

$\tan \Delta > 0$

$$\left.\begin{array}{l} 2\gamma > 0 \implies \sin 2\gamma > 0 \\ 0 \leq \theta < \psi \leq \frac{\pi}{4} \implies \sin 2\theta > 0 \end{array}\right\} \text{ See Fig. 5.}$$

(29) $\tan 2\theta = \pm \tan 2\psi \cos \Delta$

$\tan 2\theta > 0$, since $0 \leq \theta \leq \frac{\pi}{4}$

$\tan 2\psi > 0 \qquad 0 \leq \psi \leq \frac{\pi}{4}$

$\cos \Delta > 0$

thus $\tan 2\theta = + \tan 2\psi \cos \Delta \qquad 0 < \Delta < \frac{\pi}{2}$ the positive sign has physical meaning.

(30) $\cos 2\psi = \pm \cos 2\gamma \cos 2\theta$

$\cos 2\psi$, $\cos 2\theta$, $\cos 2\gamma > 0$, thus the negative sign has no meaning.

Case IV. $\frac{\pi}{2} < \Delta < \pi$

(18) $\sin 2\gamma = \sin 2\psi \sin \Delta$

$\sin \Delta > 0$

$\sin 2\psi > 0$

$\implies \sin\gamma > 0$

(27) $\tan \Delta = \dfrac{\tan 2\gamma}{\sin 2\theta}$

$\tan \Delta < 0$

$\tan 2\gamma > 0$ because $\gamma > 0$ for left hand polarization implied by $\frac{\pi}{2} < \Delta < \pi$

$\sin 2\theta < 0$ as shown in Fig. 5 $\frac{3}{4}\pi < \theta < \pi$

Therefore, positive sign as written is confirmed.

(29) $\tan 2\theta = \pm \tan 2\psi \cos \Delta$

$\tan 2\theta$, $\cos \Delta < 0$, $\tan 2\psi > 0$

Thus, $\tan 2\theta = + \tan 2\psi \cos \Delta \qquad \frac{\pi}{2} < \Delta < \pi$

the positive sign only has physical meaning.

(30) $\cos 2\psi = \pm \cos 2\gamma \cos 2\theta$

$\cos 2\gamma > 0$

$\cos 2\psi$, $\cos 2\theta$ both > 0 thus the minus sign has no meaning.

Case V. $\pi < \Delta < \frac{3\pi}{2}$

(18) $\sin 2\gamma = \sin 2\psi \sin \Delta$

$\sin \Delta < 0$

$\sin 2\psi > 0$, $\sin 2\gamma < 0$

(27) $\tan\Delta = \frac{\tan 2\gamma}{\sin 2\theta}$

$\tan \Delta > 0$

$\sin 2\theta < 0 \quad \frac{3}{4}\pi \; \theta < \pi$

$\tan 2\gamma < 0$ right hand polorization.

(29) $\tan 2\theta = \pm \tan 2\psi \cos \Delta$

$\tan 2\theta$, $\cos \Delta < 0$

$\tan 2\psi > 0$

$\therefore$ $\tan 2\theta = + \tan 2\psi \cos \Delta \qquad \pi < \Delta < \frac{3\pi}{2}$ the positive sign only has meaning.

(30) $\cos 2\psi = \pm \cos 2\gamma \cos 2\theta$

$\cos 2\psi$, $\cos 2\theta > 0$

$\cos 2\gamma > 0$

$\therefore$ negative sign has no meaning.

Case VI. $\frac{3\pi}{2} < \Delta < 2\pi$

(18) $\sin 2\gamma = \sin 2\psi \sin \Delta$

$\sin \Delta < 0$

$\sin 2\psi > 0$

$\sin 2\gamma < 0$

(27) $\tan \Delta = \dfrac{\tan 2\gamma}{\sin 2\theta}$

$\tan \Delta < 0$

$\sin 2\theta > 0$

$\tan 2\gamma < 0$

(29) $\tan 2\theta = \pm \tan 2\psi \cos\Delta$

$\cos \Delta > 0$

$\tan 2\theta > 0 \qquad 0 < \theta < \frac{\pi}{4}$

$\tan 2\psi > 0$

$\therefore \tan 2\theta = + \tan 2\psi \cos\Delta \qquad \frac{3\pi}{2} < \Delta < 2\pi$ the positive sign only has meaning.

(30) $\cos 2\psi = \pm \cos 2\gamma \cos 2\theta$

$\cos 2\psi, \cos 2\theta > 0$

$\cos 2\gamma > 0$ again, the negative sign has no meaning.

<u>Case A < B</u>

With the angles characteristic of the geometry of the ellipse defined as in Section ID

$$0 \leq \theta < \pi$$

$$-\frac{\pi}{4} \leq \gamma \leq \frac{\pi}{4}$$

and the restriction that A be smaller than B and $\tan\psi \equiv B/A \geq 0$ one obtains

$$\frac{\pi}{4} < \psi \leq \frac{\pi}{2} \implies \tan 2\psi < 0$$

and, as illustrated in Fig. 6

$$\frac{\pi}{4} < \theta < \frac{3\pi}{4}$$

Case I. Proceeding as for the previously discussed case $B \leq A$, when $\Delta = n$ we get the same results.

Case II. Proceeding as for the Case $B \leq A$

When $\Delta = \frac{\pi}{2} + n\pi$ we get the same results

Case III. When $0 < \Delta < \frac{\pi}{2} \implies \frac{\pi}{4} < \theta < \frac{\pi}{2}$ (See Fig. 6)

(18) $\sin 2\psi \sin \Delta = \sin 2\gamma$

$\sin \Delta > 0$

$\sin 2\psi > 0$

$2\gamma > 0$

(27) $\tan \Delta = \frac{\tan 2\gamma}{\sin 2\theta}$

$\tan\Delta > 0, \ \sin 2\theta > 0, \ \tan 2\gamma > 0$

(29) $\tan 2\theta = \pm \tan 2\psi \cos\Delta$

$\cos \Delta > 0$

$\frac{\pi}{2} < 2\theta \ , \ 2\psi < \frac{\pi}{2} \implies \tan 2\theta, \ \tan 2\psi < 0$

$\therefore$ $\tan 2\theta = + \tan 2\psi \cos \Delta$ as before, the positive sign only has physical meaning.

(30) $\cos 2\psi = \pm \cos 2\gamma \cos 2\theta$

> 0

$\cos 2\psi, \ \cos 2\theta < 0$

$\therefore$ only the positive sign has meaning.

Case IV. $\frac{\pi}{2} < \Delta < \pi \implies \frac{\pi}{2} < \theta < \frac{3\pi}{4}$

(18) $\sin 2\gamma = \sin 2\psi \sin \Delta$

$\sin \Delta > 0$

$\sin 2\psi > 0$

$\sin 2\gamma > 0$

(27) $\tan 2\Delta = \frac{\tan 2\gamma}{\sin 2\theta}$

$\tan \Delta < 0$

$\tan 2\gamma > 0$

$\sin 2\theta < 0$

(29) $\tan 2\theta = \pm \tan 2\psi \cos \Delta$

$\cos \Delta < 0$

$\tan 2\theta > 0$, $\tan 2\psi < 0$

$\therefore$ $\tan 2\theta = + \tan 2\psi \cos \Delta$ the positive sign only has physical meaning.

(30) $\cos 2\psi = \pm \cos 2\gamma \cos 2\theta$

> 0

$\cos 2\psi$, $\cos 2\theta < 0$

$\therefore$ negative sign has no meaning

Case V. $\pi < \Delta < \frac{3\pi}{2}$

(18) $\sin 2\gamma = \sin 2\psi \sin \Delta$

$\sin \Delta < 0$

$\sin 2\psi > 0$

$\sin 2\gamma < 0$

(27) $\tan \Delta = \frac{\tan 2\gamma}{\sin 2\theta}$

$\tan \Delta > 0$

$\tan 2\gamma < 0$

$\sin 2\theta < 0$

(29) $\tan 2\theta = \pm \tan 2\psi \cos \Delta$

$\tan 2\psi$, $\cos \Delta < 0$

$\tan 2\theta > 0$

$\therefore$ $\tan 2\theta = + \tan 2\psi \cos \Delta$ the positive sign only has meaning.

(30) $\cos 2\psi = + \cos 2\gamma \cos 2\theta$

$\cos 2\gamma > 0$

$\cos 2\psi, \cos 2\theta < 0$

$\therefore$ negative sign has no meaning.

Case VI. $\frac{3\pi}{2} < \Delta < 2\pi$

(18) $\sin 2\gamma = \sin 2\psi \sin \Delta$

$\sin \Delta < 0$

$\sin 2\psi > 0$

$\sin 2\gamma < 0$

(27) $\tan\Delta = \frac{\tan 2\gamma}{\sin 2\theta}$

$\tan 2\gamma < 0$

$\sin 2\theta > 0$

$\tan \Delta < 0$

(29) $\tan 2\theta = \pm \tan 2\psi \cos \Delta$

$\cos \Delta > 0$

$\tan 2\theta, \tan 2\psi < 0$

$\therefore$ $\tan 2\theta = + \tan 2\psi \cos \Delta$ the positive sign only has meaning.

(30) $\cos 2\psi = \pm \cos 2\gamma \cos 2\theta$

$\cos 2\gamma > 0$

$\cos 2\psi \cos 2\theta < 0$

$\therefore$ negative sign has no meaning.

Summary

The discussion has shown that with the restrictions of

$$-\frac{\pi}{4} \leq \gamma \leq +\frac{\pi}{4}$$

$$0 \leq \theta < \pi$$

All ambiguities in signs can be removed and the Equations (19), (27), (29), (30), are to be used as shown below for both cases $A \geq B$ and $A < B$.

$$\sin 2\gamma = \sin 2\psi \sin \Delta \tag{18}$$

$$\tan \Delta = \frac{\tan 2\gamma}{\sin 2\theta} \tag{27}$$

$$\tan 2\theta = \tan 2\psi \cos \Delta \tag{29}$$

$$\cos 2\psi = \cos 2\gamma \cos 2\theta \tag{30}$$

See Fig. 7 for geometrical meaning of parameters.

II. DETERMINATION OF RELATIONS BETWEEN Δ, ψ, θ, γ BY USE OF THE POINCARÉ SPHERE

In this section it will be shown that the quantities Δ, $2\psi, 2\theta$, 2γ can be interpreted as parts of a right spherical triangle as shown in Fig. 5. Equations (18), (27), (29), and (30) can be obtained directly from the triangle by applying Napier's Rules (See Appendix).

The triangle in Fig. 9a is part of the surface of a unit sphere called the Poincaré sphere. Any possible polarization state may be represented by a point on this sphere of longitude (or azimuth) 2θ measured from H and latitude 2γ measured from the equator. The convention to be adopted is that, when the equator is horizontal, points above the equator have a positive latitude, and points below the equator have a negative latitude.

The arc $\overset{\frown}{HM}$ is a segment of the equator and has length 2θ. Here θ and γ are the θ and γ defined in Section I D. All points on the equator represent various linear polarization states. The reference point H represents light that is linearly polarized parallel to the plane of incidence while the point M represents light that is linearly polarized parallel to the major axis of the ellipse.

A. Definitions of θ, γ, $\omega t = 0$

In order to assure the correct description of the elliptical oscillation throughout the following calculations, the conventions used before are re-stated, and a new one (III) is given below and illustrated in Fig. 10.

I. θ is the angle measured counter-clockwise from the positive x axis to the major axis of the ellipse such that $0 \leq \theta < \pi$ only.

II. γ is the angle, measured in the same sense as the rotation of the electric vector, from the major axis of the ellipse to the restored polarization. The values of γ are positive for left-hand polarization and negative for right-hand polarization. Thus $-\frac{\pi}{4} \leq \gamma \leq \frac{\pi}{4}$.

III. $\omega t = 0$ will be the phase of the oscillation as the tip of the rotating electric vector passes that end of the major axis which lies in the right half plane $(x > 0)$.

B. Derivation of Equations

Suppose unit intensity of linearly polarized light is incident on a perfectly reflecting surface. The x and y components of the incident light are in phase, and if the resultant electric vector makes an angle of 45° with the plane of incidence (with the x axis) the x and y components are of equal magnitude. Upon reflection, the two amplitudes will, in general, be changed and a phase difference will be introduced such that the polarization of the reflected light is elliptical. The x component leads the y component by the phase difference Δ. Let the major axis of the resulting ellipse be at an angle θ from the plane of incidence (i.e., from the x axis). The ellipticity is $\tan \gamma$ as shown in Fig. 11a.

The elliptic oscillation may be resolved into two perpendicular components along the major (u) and minor (v) axes. For unit intensity $(a^2 + b^2 = 1)$, the amplitude of the component along the u axis is $\cos\gamma$ and that along the v axis is $\sin \gamma$. Both components oscillate with frequency ω, but the positive e_u component leads the positive e_v component by $\frac{\pi}{2}$ for left-hand polarization and lags for

right-hand polarization. These components are the real parts of the complex scalars

$$\left.\begin{aligned} e_u &= \cos\gamma\, e^{-i\omega t} \\ e_v &= \sin\gamma\, e^{-i\omega t + i\frac{\pi}{2}} \end{aligned}\right\} \tag{31}$$

Note that the phase difference between the components appears as $\frac{\pi i}{2}$ in the exponent. The plus sign in the exponent along with the sign convention adopted for γ, adequately describes both right and left-hand polarizations. Then the oscillations along the major and minor axes are the real parts of

$$e_u = \cos\gamma\, e^{-i\omega t} \tag{31}$$

$$e_v = i \sin\gamma\, e^{-i\omega t} \tag{32}$$

As shown in Fig. 11b the light can also be resolved along the x and y axes so that

$$e_x = (\cos\gamma \cos\theta - i \sin\gamma \sin\theta)\, e^{-i\omega t} \tag{33}$$

$$e_y = (\cos\gamma \sin\theta + i \sin\gamma \cos\theta)\, e^{-i\omega t} \tag{34}$$

Again, the light is of unit intensity, $|e_x|^2 + |e_y|^2 = 1$ which can be verified by forming the products ee^* in (33) and (34). From Fig. 7 it is seen that the amplitudes of the two components must be

$$A = (A^2 + B^2)^{1/2} \cos\psi = |e_x|$$

$$B = (A^2 + B^2)^{1/2} \sin\psi = |e_y|$$

Taking the modulus,

$$(A^2 + B^2) \cos^2\psi = \cos^2\gamma \cos^2\theta + \sin^2\gamma \sin^2\theta \tag{35}$$

$$(A^2 + B^2) \sin^2\psi = \cos^2\gamma \sin^2\theta + \sin^2\gamma \cos^2\theta \tag{36}$$

Adding (35) and (36)

$$(A^2 + B^2) (\cos^2\psi + \sin^2\psi) = \cos^2\gamma (\sin^2\theta + \cos^2\theta) + \sin^2\gamma (\sin^2\theta + \cos^2\theta)$$

or

$$A^2 + B^2 = 1 \tag{37}$$

Subtraction of (36) from (35) leaves

$$(A^2 + B^2) (\cos^2\psi - \sin^2\psi) = \cos^2\gamma (\cos^2\theta - \sin^2\theta)$$
$$- \sin^2\gamma (\cos^2\theta - \sin^2\theta)$$

or

$$\cos 2\psi = \cos 2\gamma \cos 2\theta \tag{30}$$

as obtained before. It is illustrated in Fig. 12 that when $\omega t = \omega t_x$, e is oriented along the x axis, and $e_y = 0$. Thus, taking the real part of (34) at $\omega t = \omega t_x$,

$$0 = \cos\gamma \sin\theta \cos\omega t_x + \sin\gamma \cos\theta \sin \omega t_x$$

or

$$\tan \omega t_x = - \tan\theta \operatorname{ctn} \gamma \tag{38}$$

when $\omega t = \omega t_y$ e is oriented along the y axis and $e_x = 0$. From (33)

$$0 = \cos\gamma \cos\theta \cos \omega t_y - \sin\gamma \sin\theta \sin \omega t_y$$

or

$$\tan \omega t_y = \operatorname{ctn}\gamma \operatorname{ctn}\theta \tag{39}$$

Equations (38) and (39) give the phases of the oscillations (33) and (34). The phase difference between the two is given by

$$\Delta = \omega t_x - \omega t_y$$

So that with $\tan(\omega t_x - \omega t_y) = \dfrac{\tan \omega t_x - \tan \omega t_y}{1 + \tan \omega t_x \tan \omega t_y}$

$$\tan \Delta = - \frac{\operatorname{ctn}\gamma\,(\tan\theta + \operatorname{ctn}\theta)}{1 - \operatorname{ctn}^2\gamma}$$

Multiply the top and bottom of the right-hand side by $\tan^2\gamma$ and get

$$\tan \quad = \frac{-\tan\gamma}{\tan^2\gamma - 1}\,(\tan\theta + \operatorname{ctn}\theta)$$

$$= \frac{2\tan\gamma}{1 - \tan^2\gamma}\;\frac{1}{2}\,(\tan\theta + \operatorname{ctn}\theta)$$

$$= \tan 2\gamma\,\frac{1}{2}\underbrace{\left(\frac{\sin\theta}{\cos\theta} + \frac{\cos\theta}{\sin\theta}\right)}_{\left(\frac{\sin^2\theta + \cos^2\theta}{\cos\theta\,\sin\theta}\right)}$$

$$\tan \Delta = \frac{\tan 2\gamma}{\sin 2\theta} \tag{27}$$

as obtained before.

C. Poincaré Interpretation

The elliptic polarization state P is represented by convention by a point of azimuth 2θ and latitude 2γ on a unit sphere as described earlier in this section. Fig. 9b shows such a spherical triangle HMP_o.

The symbol $\measuredangle$ preceding a group of three letters will be used in the following to mean "the angle". For example, $\measuredangle P_o H M$ means "the angle between the sides HP_o and HM of the spherical triangle or the angle between the tangents to the axes HP_o and HM at their point of intersection H."

Application of Napier's Rules (see appendix, page 1, rule iv) to the right spherical triangle HP_oM in Fig. 9b gives the result

$$\sin 2\theta = \tan 2\gamma \cot \measuredangle P_oHM$$

or

$$\tan \measuredangle P_oHM = \frac{\tan 2\gamma}{\sin 2\theta} \tag{40}$$

Comparison of Equations (40) and (27) reveals that

$$\measuredangle P_oHM = \Delta \tag{41}$$

Application of Rule V to the triangle HP_oM gives

$$\cos \widehat{HP_o} = \cos 2\theta \cos 2\gamma \tag{42}$$

Comparison of Equations (41) and (30) reveals that

$$\widehat{HP_o} = 2\psi \tag{43}$$

Application of Rules I and IX to the triangle HP_oM furnishes the remaining two equations

$$\sin 2\gamma = \sin 2\psi \sin \Delta \tag{18}$$

$$\tan 2\psi \cos \Delta = \tan 2\theta \tag{29}$$

The validity of the interpretation given in Fig. 9a is therefore established.

D. Interpretation of Phase Differences

A consideration of Fig. 9a shows that a clockwise rotation of the sphere through an angle Δ about the diameter passing through H brings the polarization state P_o to P_o' which is a linear state. Thus it can be seen that the effect of introducing a phase difference Δ between the x and y components of light of linear state P_o' is represented by rotating the sphere anti-clockwise about the diameter passing through H through an angle Δ .

It follows that if the initial polarization state is P_1, now considered a general point, then the effect of introducing a phase difference Δ_1 between two orthogonal components at angles α and $\alpha+\frac{\pi}{2}$ from the x axis is to rotate the sphere anti-clockwise through an angle Δ_1 about the diameter passing through the aximuth 2α.

Summary

The four relations

$$\sin 2\gamma = \sin 2\psi \sin \Delta \tag{18}$$

$$\tan 2\theta = \tan 2\psi \cos \Delta \tag{29}$$

$$\cos 2\psi = \cos 2\gamma \cos 2\theta \tag{30}$$

$$\tan \Delta = \frac{\tan 2\gamma}{\sin 2\theta} \tag{27}$$

can be read directly from Fig. 5 by applying Napier's Rules as given in the Appendix to the right spherical triangle HP_oM. Note that the previously experienced ambiguities in sign do not appear here.

III. CORRECTION FOR INEXACT SÉNARMONT COMPENSATOR

The foregoing analysis has given four equations that relate the measured parameters θ and γ to the desired physical parameters Δ and ψ. For Equations (18), (27), (29), and (30) to be correct, the compensation in phase by the quarter wave plate must be exactly $\frac{\pi}{2}$. In practice the retardation of the compensator is never exactly $\frac{\pi}{2}$. However, it will be shown in this section that exact equations can be found that give Δ and ψ in terms of the actual compensation δ of the "quarter" wave plate and two measured parameters.

Suppose that the actual retardation of the compensator is $\delta \neq \frac{\pi}{2}$, where δ is taken to be a positive quantity. If the phase difference between the components of the ellipse parallel to the compensator's fast (f) and slow (s) axes is $(\omega t_f - \omega t_s)_1$ before passage through the compensator and $(\omega t_f - \omega t_s)_2$ after passage through the compensator, then the quantity δ is defined by

$$(\omega t_f - \omega t_s)_2 = (\omega t_f - \omega t_s)_1 + \delta$$

If there exist two orthogonal compenents of the elliptic oscillation whose phase difference is exactly equal to $-\delta$, and if the slow axis of the compensator is placed parallel to the leading member of this orthogonal pair, then $(\omega t_f - \omega t_s)_1 = -\delta$ and compensation will result, that is,

$$(\omega t_f - \omega t_s)_2 = -\delta + \delta = 0$$

As an example consider the case $\delta = \frac{\pi}{2}$. The orthogonal components of the elliptic oscillation whose phase difference is $-\frac{\pi}{2}$ are those

along the elipse's major and minor axes.

For left-hand polarization the leading member of the orthogonal pair is the compenent along the (positive) major axis. Thus for compensation to occur the slow axis should be placed parallel to the ellipse's major axis. Then the quantity $(\omega t_f - \omega t_s)_1 = -\frac{\pi}{2} = -\delta$. For right-hand polarization, the slow axis should be parallel to the ellipse's (positive) minor axis.

In order for compensation to be produced by a compensator for which $\delta \neq \frac{\pi}{2}$ some orthogonal pair must exist whose phase difference is exactly $-\delta$. This pair is not the orthogonal pair composed of the ellipse's major and minor radii. In the following discussion it will be assumed that orthogonal pairs can always be found whose initial phase difference is equal to $-\delta$.

At compensation, the slow axis is at an angle θ' with the reference x axis, and the resulting linearly polarized light vibrates at an angle $\theta' + \gamma'$ with the x axis. Figure 13 shows the relation between the angles θ, γ, θ' and γ'.

A. Interpretation of Actual Retardation δ

Suppose unit intensity of elliptically polarized light is incident on the compensator. Using the conventions previously adopted, the oscillations along the major and minor axes of the ellipse are given by equations (31) and (32), again using the complex form .

$$e_u = \cos\gamma\, e^{-i\omega t} \tag{31}$$

$$e_v = i \sin\gamma\, e^{-i\omega t} \tag{32}$$

Referring to Fig. 14 e_u and e_v are resolved into components along

the S and F axes of the compensator.

Thus,

$$e_s = e_u \cos(\theta - \theta') - e_v \sin(\theta - \theta') \tag{44}$$

$$e_f = e_u \sin(\theta - \theta') + e_v \cos(\theta - \theta') \tag{45}$$

or, e_s and e_f are the real parts of

$$e_s = \left| \cos\gamma \cos(\theta - \theta') - i \sin\gamma \sin(\theta - \theta') \right. \quad e^{-i\omega t} \tag{44a}$$

$$e_f = \left| \cos\gamma \sin(\theta - \theta') + i \sin\gamma \cos(\theta - \theta') \right. \quad e^{-i\omega t} \tag{45a}$$

The phase difference between these oscillations can be found in the following way. When $\omega t = \omega t_s$, the tip of the electric vector sweeps past the slow axis and e_f goes through its zero value. Thus, evaluating (45a) at $\omega t = \omega t_s$, and taking the real part,

$$e_f = 0 = \mathrm{Re} \quad \cos\gamma \sin(\theta - \theta') + \sin\gamma \cos(\theta - \theta') \quad e^{-i\omega t_s}$$

$$0 = \cos\gamma \sin(\theta - \theta') \cos \omega t_s + \sin\gamma \cos(\theta - \theta') \sin \omega t_s$$

$$\sin \omega t_s \sin\gamma \cos(\theta - \theta') = - \cos\gamma \sin(\theta - \theta') \cos \omega t_s$$

$$\tan \omega t_s = - \operatorname{ctn}\gamma \tan(\theta - \theta') \tag{46}$$

The electric vector passes through the f axis at $\omega t = \omega t_f$, and the real part of (44a) is zero.

$$\mathrm{Re} \quad \cos\gamma \cos(\theta - \theta') - i \sin\gamma \sin(\theta - \theta') \quad e^{-i\omega t_f} = 0$$

$$0 = \cos\gamma \cos(\theta - \theta') \cos \omega t_f - \sin\gamma \sin(\theta - \theta') \sin \omega t_f$$

$$\sin\gamma \sin(\theta - \theta') \sin \omega t_f = \cos\gamma \cos(\theta - \theta') \cos \omega t_f$$

$$\tan \omega t_f = \operatorname{ctn}\gamma \operatorname{ctn}(\theta - \theta') \tag{47}$$

The difference in phase between e_f and e_s is $(\omega t_f - \omega t_s)_1$. Compensation will occur when the phase difference δ introduced by the compensator added to the already existing phase difference $(\omega t_f - \omega t_s)_1$ produces a total phase difference of 0 or π between e_f and e_s. That is, that

$$(\omega t_f - \omega t_s)_2 = 0 \text{ or } \pi$$

Thus, at compensation

$$0 \text{ or } \pi = (\omega t_f - \omega t_s)_1 + \delta$$

$$(\omega t_f - \omega t_s)_1 = -\delta \text{ or } \pi - \delta$$

$$(\omega t_s - \omega t_f)_1 = \delta \tag{48}$$

or

$$(\omega t_s - \omega t_f)_1 = \delta - \pi \tag{49}$$

From Equation 48,

$$\tan \delta = \tan (\omega t_s - \omega t_f)$$

$$\tan \delta = - \frac{(\tan \omega t_f - \tan \omega t_s)}{1 + \tan \omega t_f \tan \omega t_s}$$

Substitution from Equations (46) and (47) gives

$$\tan \delta = - \frac{\left(\operatorname{ctn}\gamma \operatorname{ctn}(\theta-\theta') + \operatorname{ctn}\gamma \tan(\theta-\theta')\right)}{1 - \operatorname{ctn}\gamma \operatorname{ctn}(\theta-\theta') \operatorname{ctn}\gamma \tan(\theta-\theta')}$$

$$\tan \delta = - \frac{\operatorname{ctn}\gamma \left(\operatorname{ctn}(\theta-\theta') + \tan(\theta-\theta')\right)}{1 - \operatorname{ctn}^2\gamma}$$

$$= - \frac{\tan \gamma}{\tan^2\gamma - 1} \left(\frac{\cos(\theta-\theta')}{\sin(\theta-\theta')} + \frac{\sin(\theta-\theta')}{\cos(\theta-\theta')} \right)$$

$$= + \frac{2 \tan\gamma}{1 - \tan^2\gamma} \frac{1}{2}\left(\frac{\cos^2(\theta-\theta') + \sin^2(\theta-\theta')}{\sin(\theta-\theta') \cos(\theta-\theta')} \right)$$

$$\therefore \tan\delta = + \frac{\tan 2\gamma}{\sin 2(\theta-\theta')} \tag{50}$$

Since the tangent of $\delta - \pi$ is equal to the tangent of δ, Equation (49) also leads to Equation (50).

The linearly polarized light emerging from the compensator is represented by a point A of aximuth $2\theta' + 2\gamma'$ on the equator of the Poincaré sphere as shown in Fig. 12.

Consider the right spherical triangle AP_oM in Fig. 15. The point S is located at an azimuth $2\theta'$. Using Napier's rules for a right spherical triangle, it is found that

$$\sin \widehat{SM} = \tan \widehat{P_oM} = \cot \measuredangle P_oSM$$

or

$$\tan \measuredangle P_oSM = \frac{\tan \widehat{P_oM}}{\sin \widehat{SM}}$$

But $\widehat{P_oM} = 2\gamma$ and $SM = 2(\theta-\theta')$

So,

$$\tan \measuredangle P_oSM = \frac{\tan 2\gamma}{\sin 2(\theta-\theta')}$$

$$= \tan\delta \text{ by Equation (50).}$$

Evidently, $\measuredangle P_oSM = \delta$. δ can therefore, also be visualized as an angle on the Poincaré Sphere.

B. Derivation of Alternate Equations

It is a feature of the Poincaré representation that the linear state A, obtained from the elliptical state P_o by introducing the

phase δ, can be found by rotating the sphere clockwise through an angle δ about a diameter through S, the azimuth of the compensator's slow axis. Such a rotation shows the arcs $\overset{\frown}{SP_o}$ and $\overset{\frown}{SA}$ to be equal (Fig. 15). Thus, since $\overset{\frown}{SA}$ is $2\gamma'$, $P_oS = 2\gamma'$.

Application of spherical trigonometry to the triangle P_oSM of Fig. 15 yields the result illustrated in Fig. 16.

$$\sin 2\gamma = \sin 2\gamma' \sin \delta \tag{51}$$

Another useful result may be obtained directly from the right spherical triangle P_oSM. That is that

$$\tan (\theta-\theta') = \cos \delta \tan 2\gamma' \tag{52}$$

Figure 16 shows the relation between $2\gamma'$, δ, θ' and the other parameters 2γ, 2θ, 2ψ, Δ.

C. Calibration of Quarter Wave Plate

Equations (50) and (51) can be solved for γ and θ once δ is known, and the desired parameters Δ and ψ can then be obtained from Equations (18), (27), (29), (30).

In order to determine the third quantity δ a third measurement must be made. There is another setting of the compensator which produces extinction, namely, when the fast axis of the inexact compensator forms the angle $\theta-\theta'$ with the u axis, i.e., the angle $2\theta-\theta'$ with the x axis, with θ' having the same value at extinction previously discussed.

Proof that the compensator setting illustrated in Fig. 17 produces compensation with the same analyzer setting as before, is given next. Suppose the fast axis of the compensator is set at an angle $2\theta-\theta'$ from the x axis, as shown in Fig. 17. Then,

$$e_s = e_u \sin(\theta-\theta') + e_v \cos(\theta-\theta') \tag{53}$$

$$e_f = e_u \cos(\theta-\theta') - e_v \sin(\theta-\theta') \tag{54}$$

Then with $e_u = \cos\gamma\, e^{-i\omega t}$

$$e_v = i \sin\gamma\, e^{-i\omega t}$$

e_s and e_f are the real parts of

$$e_s = \left| \cos\gamma \sin(\theta-\theta') + i \sin\gamma \cos(\theta-\theta') \right. \quad e^{-i\omega t} \tag{55}$$

$$e_f = \left| \cos\gamma \cos(\theta-\theta') - i \sin\gamma \sin(\theta-\theta') \right. \quad e^{-i\omega t} \tag{56}$$

The phase difference between these oscillations is found in the usual way. At $\omega t = \omega t_s$, $e_f = 0$. Thus, evaluating the real part of Equation (56) at $\omega t = \omega t_s$ results in

$$0 = \cos\gamma \cos(\theta-\theta') \cos \omega t_s - \sin\gamma \sin(\theta-\theta') \sin \omega t_s$$

or

$$\tan \omega t_s = \operatorname{ctn}\gamma \ \operatorname{ctn}(\theta-\theta') \tag{57}$$

at $\omega t = \omega t_f$, $e_s = 0$. So evaluation of the real part of Equation (55) at $\omega t = \omega t_f$ gives

$$\cos\gamma \sin(\theta-\theta') \cos \omega t_f + \sin\gamma \cos(\theta-\theta') \sin \omega t_f = 0$$

or

$$\tan \omega t_f = - \operatorname{ctn}\gamma \tan(\theta-\theta') \tag{58}$$

On passage through the compensator, an additional phase difference of δ is introduced between the two components parallel to the compen-

sator axes. The difference in phase between e_f and e_s is $(\omega t_f - \omega t_s)_1$ thus compensation occurs when the <u>addition</u> of δ yields a phase difference of 0 or π. The same steps leading to (48) and (49) are applied again.

$$(\omega t_f - \omega t_s)_1 + \delta = (\omega t_f - \omega t_s)_2 = 0 \text{ or } \pi$$

$$\delta, \text{ or } \delta - \pi = -(\omega t_f - \omega t_s)_1$$

$$\delta, \text{ or } \delta - \pi = (\omega t_s - \omega t_f)_1 \qquad (48)\ (49)$$

$$\tan\delta = -\tan(\omega t_f - \omega t_s)$$

$$= -\frac{\tan\omega t_f - \tan\omega t_s}{1 \quad \tan\omega t_s \tan\omega t_f}$$

Substituting from (57) and (58),

$$\tan\delta = +\frac{\operatorname{ctn}\gamma \tan(\theta-\theta') + \operatorname{ctn}\gamma \operatorname{ctn}(\theta-\theta')}{1 - \operatorname{ctn}\gamma \tan(\theta-\theta') \operatorname{ctn}\gamma \operatorname{ctn}(\theta-\theta')}$$

$$= +\frac{\operatorname{ctn}\gamma\,(\tan(\theta-\theta') + \operatorname{ctn}(\theta-\theta'))}{1 - \operatorname{ctn}^2\gamma}$$

$$= \frac{2\tan\gamma}{\tan^2\gamma - 1}\ \frac{1}{2}\left(\frac{\sin(\theta-\theta')}{\cos(\theta-\theta')} + \frac{\cos(\theta-\theta')}{\sin(\theta-\theta')}\right)$$

$$= -\frac{2\tan\gamma}{1-\tan^2\gamma}\ \frac{\sin^2(\theta-\theta') \quad \cos^2(\theta-\theta')}{2\cos(\theta-\theta')\sin(\theta-\theta')}$$

$$\tan\delta = -\frac{\tan 2\gamma}{\sin 2(\theta-\theta')} \qquad (59)$$

Thus, it is seen that in this second setting δ has the same magnitude but the opposite sign as in the original setting. The negative sign should appear since the fast and slow axes of the

compensator have effectively been interchanged. Such an interchange is equivalent to a negative value of δ.

The foregoing has shown that if extinction occurs when the slow axis of the compensator is of $2\theta'$ (in Poincaré representation), then extinction also occurs when the azimuth of the slow axis in Poincaré representation is $\pi + 2(2\theta-\theta')$ (corresponding to an azimuth of $2(2\theta-\theta')$ of fast axis and angle $2\theta-\theta'$ of fast axis with respect to x axis of Fig. 17). That is, extinction also occurs when slow axis is set at

$$\theta'' = \frac{\pi}{2} + 2\theta-\theta' \tag{60}$$

By Equations (50) and (59) it is seen that $\widehat{S_1M} = \widehat{MF_2}$ (Fig. 18). The angle θ can now be determined directly from the two measurements θ' and $\theta'' = 2\theta-\theta' + \frac{\pi}{2}$ of the orientation of the compensator's slow axis at extinction. From Equation (60),

$$\theta = \frac{\theta'' + \theta' - \frac{\pi}{2}}{2} \tag{61}$$

SUMMARY

I. A: To calibrate the compensator measure θ' and θ'' and compute θ from

$$\theta = \frac{\theta''+ \theta' - \frac{\pi}{2}}{2} \tag{61}$$

B: Knowing θ, the measurements of θ' and γ' give δ from

$$\tan(\theta-\theta') = \cos\delta \tan 2\gamma' \tag{52}$$

II. A: When δ is known, only θ' need be measured. It will always be the smaller of the two angular settings that give extinction.

B: Application of the Law of Cosines for Sides (see appendix) to triangle HP_0S_1 (Fig. 18) gives

$$\cos 2\psi = \cos 2\theta' \cos 2\gamma' - \sin 2\theta' \sin 2\gamma' \cos \delta \tag{62}$$

from which ψ can be calculated. Since, by definition, ψ is always positive, no ambiguity of the sign of ψ arises from the solution of Equation (62).

C: The parameter γ can be obtained from

$$\sin 2\gamma = \sin 2\gamma' \sin \delta \tag{51}$$

D: Finally, Δ can be computed from

$$\frac{\sin 2\gamma}{\sin 2\psi} = \sin \Delta \tag{18}$$

CHAPTER TWO. ELLIPTIC POLARIZATION INCIDENT

I. DESCRIPTION OF OPTICAL SYSTEM

When elliptically polarized light is reflected from a metal surface, its components parallel (x component) and normal (y component) to the plane of incidence undergo a phase change Δ which is then added to their already existing phase difference. If the new phase change Δ is equal to but in the opposite sense from the already existing phase difference, the reflected light will be linearly polarized.

With the arrangement shown in Fig. 19, linearly polarized light vibrating at an angle α with the plane of incidence is produced by a polarizer. This light then passes through a Sénarmont compensator, the fast axis of which is at an angle $\frac{\pi}{4}$ with the plane of incidence (Fig.20). If the retardation of the compensator is δ, the component of the linearly polarized light that is parallel to the fast axis will be advanced in phase an amount δ over the component parallel to the slow axis. Thus an elliptic vibration will be produced which can be further decomposed into oscillations parallel to and normal to the plane of incidence. By varying α, these components can be made to have a phase difference which is equal to the retardation Δ imposed by the reflection. Under these circumstances reduction to linearly polarized Light results.

In addition to a phase change on reflection the x and y components also undergo an amplitude change. The linear analyzer measures the ratio of the reflected y and x components as

$\tan \beta \equiv \tan \psi_r$ where β is the setting of the extinction axis of the analyzer at extinction. Thus, if the ratio of these quantities is given by $\tan \psi_i$ before reflection the ratio is reduced by a factor

$$\tan \psi \equiv \frac{\tan\psi_r}{\tan\psi_i} \tag{13a}$$

after reflection.

II. DERIVATION OF EQUATIONS

The state P of the original linearly polarized light is represented by the point P of azimuth 2α on the equator of the Poincaré sphere as shown in Fig. 21. The reference point H, as always, represents light that is linearly polarized parallel to the plane of incidence. As was pointed out in Section IID of Chapter One, it is a feature of the Poincaré representation that the elliptical Polarization State P_o, obtained by introducing a phase difference δ between the components of the linear light parallel to the compensator can be obtained by rotating the sphere about a diameter passing through F(the azimuth of the compensator's fast axis in Poincare space) counterclockwise through an angle δ.

Thus, the sides $\widehat{FP}$ and $\widehat{FP_o}$ are equal. As shown in Chapter One, Section II, when the latitude of the point P_o is 2γ, the angle $\measuredangle P_oHF$ is equal to Δ, the phase differences between the x and y components of the elliptic vibration. It was also shown that the arc HP_o is equal to $2\psi_i$. Figure 21 shows the relation between 2α, δ, $2\psi_i$, and Δ.

Application of Spherical trigonometry to the right spherical triangle P_oMF of Fig. 21 gives

$$\sin \widehat{P_oM} = \sin 2(\alpha - \frac{\pi}{4}) \sin \delta \tag{62}$$

Using the same identity in triangle HP_oM there results

$$\sin \widehat{P_oM} = \sin 2\psi_i \sin \Delta \tag{63}$$

Equating (62) and (63), one finds that

$$\sin 2\psi_i = \frac{\sin 2(\alpha - \frac{\pi}{4}) \sin \delta}{\sin \Delta} = -\frac{\cos 2\alpha \sin\delta}{\sin\Delta} \tag{64}$$

As in Chapter One, Section II, the linear vibration emerging from the polarizer is decomposed into components along F and S (see Fig. 20) yielding, for light of unit intensity,

$$e_f = \cos (\frac{\pi}{4} - \alpha) e^{-i\omega t} \tag{65}$$

$$e_s = \sin (\frac{\pi}{4} - \alpha) e^{-i\omega t} \tag{66}$$

The oscillations along the fast and slow axes are the real parts of the right sides of (65) and (66) respectively.

On passing through the compensator, a phase difference δ is introduced between e_f and e_s, so that (66) becomes

$$e_s = \sin (\frac{\pi}{4} - \alpha) e^{-i\omega t + i\delta}$$

or

$$e_s = \sin (\frac{\pi}{4} - \alpha) (\cos\delta + i \sin\delta) e^{-i\omega t} \tag{66a}$$

The resulting vibrations (65) and (66a) combine to form an elliptical oscillation. From Fig. 20 it can be seen that resolution along the x and y axes gives

$$e_x = e_f \cos\frac{\pi}{4} - e_s \sin\frac{\pi}{4} \tag{67}$$

$$e_y = e_f \sin\frac{\pi}{4} + e_s \cos\frac{\pi}{4} \tag{68}$$

or, substituting from (65) and (66a) and using the fact that $\cos\frac{\pi}{4} = \frac{\sqrt{2}}{2}$, one has

$$e_x = \frac{\sqrt{2}}{2}\left(\cos\left(\frac{\pi}{4} - \alpha\right) - \sin\left(\frac{\pi}{4} - \alpha\right)(\cos\delta + i\sin\delta)\right) e^{-i\omega t} \tag{67a}$$

$$e_y = \frac{\sqrt{2}}{2}\left(\cos\left(\frac{\pi}{4} - \alpha\right) \quad \sin\left(\frac{\pi}{4} - \alpha\right)(\cos\delta + i\sin\delta)\right) e^{-i\omega t} \tag{68a}$$

The phase difference between the x and y components is found as follows:

at $\omega t = \omega t_x$, $e_y = 0$. Taking the real part of (68a) at $\omega t = \omega t_x$ there results

$$0 = \mathrm{Re}\frac{\sqrt{2}}{2}\left(\cos\left(\frac{\pi}{4} - \alpha\right) + \sin\left(\frac{\pi}{4} - \alpha\right)(\cos\delta + i\sin\delta)\right) e^{-i\omega t_x}$$

$$0 = \left[\cos\left(\frac{\pi}{4} - \alpha\right) + \sin\left(\frac{\pi}{4} - \alpha\right)\cos\delta\right]\cos\omega t_x + \sin\left(\frac{\pi}{4} - \alpha\right)\sin\delta\sin\omega t_x$$

or

$$\tan\omega t_x = -\frac{\cos\left(\frac{\pi}{4} - \alpha\right) + \sin\left(\frac{\pi}{4} - \alpha\right)\cos\delta}{\sin\left(\frac{\pi}{4} - \alpha\right)\sin\delta}$$

$$\tan\omega t_x = -\left(\frac{\mathrm{ctn}\left(\frac{\pi}{4} - \alpha\right)}{\sin\delta} + \mathrm{ctn}\,\delta\right) \tag{69}$$

At $\omega t = \omega t_y$, $e_x = 0$. Taking the real part of (67a) there results

$$0 = \mathrm{Re}\frac{\sqrt{2}}{2}\left[\cos\left(\frac{\pi}{4} - \alpha\right) - \sin\left(\frac{\pi}{4} - \alpha\right)(\cos\delta + \sin\delta)\right] e^{-i\omega t_y}$$

$$0 = \frac{\sqrt{2}}{2}\left\{\left[\cos\left(\frac{\pi}{4} - \alpha\right) - \sin\left(\frac{\pi}{4} - \alpha\right)\cos\delta\right]\cos\omega t_y - \sin\left(\frac{\pi}{4} - \alpha\right)\sin\delta\,\sin\omega t_y\right\}$$

$$\sin\left(\frac{\pi}{4} - \alpha\right)\sin\delta\,\sin\omega t_y = \left[\cos\left(\frac{\pi}{4} - \alpha\right) - \sin\left(\frac{\pi}{4} - \alpha\right)\cos\delta\right]\cos\omega t_y$$

$$\tan\omega t_y = \frac{\cos\left(\frac{\pi}{4} - \alpha\right) - \sin\left(\frac{\pi}{4} - \alpha\right)\cos\delta}{\sin\left(\frac{\pi}{4} - \alpha\right)\sin\delta}$$

$$\tan\omega t_y = \frac{\mathrm{ctn}\left(\frac{\pi}{4} - \alpha\right)}{\sin\delta} - \mathrm{ctn}\,\delta \tag{70}$$

The phase retardation on reflection must be equal to the phase difference between the x and y components upon incidence if linearly polarized light is to be produced. Thus

$$\Delta = \omega t_x - \omega t_y \tag{71}$$

$$\tan\Delta = \tan(\omega t_x - \omega t_y) = \frac{\tan\omega t_x - \tan\omega t_y}{1 + \tan\omega t_x \tan\omega t_y}$$

Substituting from (69) and (70),

$$\tan\Delta = \frac{-\dfrac{\mathrm{ctn}\left(\frac{\pi}{4} - \alpha\right)}{\sin\delta} - \mathrm{ctn}\,\delta - \dfrac{\mathrm{ctn}\left(\frac{\pi}{4} - \alpha\right)}{\sin\delta} + \mathrm{ctn}\,\delta}{1 - \left(\dfrac{\mathrm{ctn}\left(\frac{\pi}{4} - \alpha\right)}{\sin\delta} + \mathrm{ctn}\,\delta\right)\left(\dfrac{\mathrm{ctn}\left(\frac{\pi}{4} - \alpha\right)}{\sin\delta} - \mathrm{ctn}\,\delta\right)}$$

Multiplying the top and bottom of the right side by $\sin^2\delta$ leaves

$$\tan\Delta = -\frac{2\ \mathrm{ctn}\left(\frac{\pi}{4} - \alpha\right)\sin\delta}{\sin^2\delta - \left(\mathrm{ctn}\left(\frac{\pi}{4} - \alpha\right) + \cos\delta\right)\left(\mathrm{ctn}\left(\frac{\pi}{4} - \alpha\right) - \cos\delta\right)}$$

$$= -\frac{2\ \mathrm{ctn}\left(\frac{\pi}{4} - \alpha\right)\sin\delta}{\sin^2\delta - \mathrm{ctn}^2\left(\frac{\pi}{4} - \alpha\right) + \cos^2\delta + \mathrm{ctn}\left(\frac{\pi}{4} - \alpha\right)\cos\delta - \mathrm{ctn}\left(\frac{\pi}{4} - \alpha\right)\cos\delta}$$

$$\tan\Delta = -\frac{2\ \mathrm{ctn}\left(\frac{\pi}{4} - \alpha\right)\sin\delta}{1 - \mathrm{ctn}^2\left(\frac{\pi}{4} - \alpha\right)}$$

$$= -\frac{2\tan\left(\frac{\pi}{4} - \alpha\right)\sin\delta}{\tan^2\left(\frac{\pi}{4} - \alpha\right) - 1}$$

$$= \frac{2\tan\left(\frac{\pi}{4} - \alpha\right)\sin\delta}{1 - \tan^2\left(\frac{\pi}{4} - \alpha\right)}$$

$$\tan\Delta = \tan 2\left(\frac{\pi}{4} - \alpha\right)\sin\delta$$

$$\tan\Delta = \mathrm{ctn}\ 2\alpha\ \sin\delta \tag{72}$$

Notice that for the special case $\delta = \frac{\pi}{2}$ corresponding to exact quarter wave compensation, Equation (72) reduces to

$$\tan\Delta = \mathrm{ctn}\ 2\alpha \tag{72a}$$

which implies that

$$\Delta = \frac{\pi}{2} - 2\alpha \tag{73}$$

SUMMARY

Once the compensator is calibrated, Δ is found directly from (72) using the measured angle α .

$$\tan \Delta = \operatorname{ctn} 2\alpha \sin\delta \tag{72}$$

When Δ is known, ψ_i can be found from

$$\sin 2\psi_i = \frac{-\cos 2\alpha \quad \sin\delta}{\sin \Delta} \tag{64}$$

When ψ_i is known, the measured angle β gives ψ from

$$\tan \psi \equiv \frac{\tan\psi_r}{\tan\psi_i} \tag{13a}$$

Where $\psi_r \equiv \beta$ = setting of <u>extinction</u> axis of analyzer at extinction.

CHAPTER THREE. INTENSITY ANALYSIS

I. FRACTION OF STATE P THAT IS PASSED BY ELLIPTIC ANALYZER OF STATE A

As mentioned in the introduction, the phase change Δ occurring on reflection from a metal surface often changes so quickly that the methods of compensation given in the previous chapters are too slow to give accurate values of Δ and ψ. An analysis of the intensity transmitted by a rotating analyzer placed in the path of the reflected light is a possible way for faster determinations of Δ and ψ.

A "quarter wave" plate, when followed by a linear analyzer (nicol prism), can be used as an elliptic analyzer with the following property. Let the slow axis S of the quarter wave plate and the transmission axis N of the linear analyzer make angles θ_A, and $\theta_N = \theta_A + \gamma_A$ respectively with the x axis. Then, when light of elliptic polarization state $A(2\theta_A, 2\gamma_A)$ is incident on the system, the major axis of the elliptic vibration coincides with S and the restored polarization is along N. Thus, light of state A is completely transmitted by the system. The elliptic analyzer is then called an elliptic analyzer of state A. The dashed ellipse in Fig. 23 and the point A in Fig. 24 represent the state A. Figure 23 illustrates the angles γ_A, θ_A in real space while Fig. 24 gives their interpretation in Poincaré Space.

Consider the general elliptical oscillation P represented by the solid ellipse of Fig. 23 and by the point P of Fig. 24. It is described by Equations (81) and (82).

$$e_{u_p} = \cos \gamma_p \, e^{-i\omega t} \tag{81}$$

$$e_{v_p} = i \sin \; _p \, e^{-i\omega t} \tag{82}$$

which are the same as Equations (31) and (32) of Chapter One. When this light is incident on the quarter wave plate of the elliptic analyzer, the components along the fast and slow axes respectively are (see Fig. 22)

$$e_f = e_{u_p} \sin\xi + e_{v_p} \cos\xi \tag{83}$$

$$e_s = e_{u_p} \cos\xi - e_{v_p} \sin\xi \tag{84}$$

where ξ is the angle between the u_p and S axes (see Fig. 23). Equations (83) and (84) are equivalent to Equations (44) and (45) of Chapter One, where ξ has replaced $(\theta-\theta')$ of Fig. 14.

$$\xi \equiv \theta_p - \theta_A$$

On passage through the quarter wave plate a phase difference is introduced between e_{s_p} and e_{f_p} with e_{s_p} lagging by $\frac{\pi}{2}$. Thus

$$e_s = (e_{u_p} \cos\xi - e_{v_p} \sin\xi)\, e^{i\frac{\pi}{2}} \tag{84a}$$

which becomes after substitution from (81) and (82)

$$e_s = (\cos\gamma_p \cos\xi - i \sin\gamma_p \sin\xi)\, e^{-i\omega t}\, e^{i\frac{\pi}{2}}$$

Since the amplitudes are all that is required in what follows, we can write with, $e^{i\frac{\pi}{2}} = i$,

$$e_s = (\sin\gamma_p \sin\xi + i \cos\gamma_p \cos\xi) \tag{85}$$

$$e_f = (\cos\gamma_p \sin\xi + i \sin\gamma_p \cos\xi) \tag{86}$$

The linear analyzer resolves these vibrations along two perpendicular axes and passes one of them. Suppose the transmission axis of the analyzer is set at an angle γ_A with the S axis. Then, the intensity it transmits is proportional to

$$|e_t|^2 = e_t e_t^*$$

where

$$e_t = e_s \cos\gamma_A + e_f \sin\gamma_A \tag{87}$$

Substituting from (85) and (86),

$$\begin{aligned} e_t &= (\sin\gamma_p \sin\xi + i \cos\gamma_p \cos\xi) \cos\gamma_A \\ &\quad + (\cos\gamma_p \sin\xi + i \sin\gamma_p \cos\xi) \sin\gamma_A \\ &= (\cos\gamma_p \sin\xi \sin\gamma_A + \sin\gamma_p \sin\xi \cos\gamma_A) \\ &\quad + i(\cos\gamma_p \cos\xi \cos\gamma_A + \sin\gamma_p \cos\xi \sin\gamma_A) \\ &= \sin\xi\,(\cos\gamma_p \sin\gamma_A + \sin\gamma_p \cos\gamma_A) \\ &\quad + i \cos\xi\,(\cos\gamma_p \cos\gamma_A + \sin\gamma_p \sin\gamma_A) \qquad (88) \\ &= \sin\xi \sin(\gamma_p + \gamma_A) + i \cos\xi \cos(\gamma_p - \gamma_A) \end{aligned}$$

$$|e_t|^2 = \sin^2\xi \sin^2(\gamma_p + \gamma_A) + \cos^2\xi \cos^2(\gamma_p - \gamma_A) \tag{89}$$

Equation (88) can be transformed to arrive at an alternate final result (90) which can be interpreted on the Poincaré sphere. Rewrite (89)

$$|e_t|^2 = \sin^2\xi\left[\cos\gamma_p \sin\gamma_A + \sin\gamma_p \cos\gamma_A\right] + \cos^2\xi\left[\cos\gamma_p \cos\gamma_A + \sin\gamma_p \sin\gamma_A\right]^2$$

$$= \sin^2\xi\left[\cos^2\gamma_p \sin^2\gamma_A + \sin^2\gamma_p \cos^2\gamma_A + 2\sin\gamma_p \cos\gamma_p \sin\gamma_A \cos\gamma_A\right]$$

$$+ \cos^2\xi\left[\cos^2\gamma_p \cos^2\gamma_A + \sin^2\gamma_p \sin^2\gamma_A + 2\sin\gamma_p \cos\gamma_p \sin\gamma_A \cos\gamma_A\right]$$

$$|e_t|^2 = \frac{1}{2}\sin 2\gamma_p \sin 2\gamma_A(\sin^2\xi + \cos^2\xi) + (\sin^2\xi\cos^2\gamma_p\sin^2\gamma_A + \sin^2\xi\sin^2\gamma_p\cos^2\gamma_A$$

$$+ \cos^2\xi\cos^2\gamma_p\cos^2\gamma_A + \sin^2\gamma_p\cos^2\xi\sin^2\gamma_A)$$

Add and subtract the second term in brackets below

$$|e_t|^2 = \frac{1}{2}\sin 2\gamma_p \sin 2\gamma_A + \frac{1}{2}(\sin^2\xi\cos^2\gamma_p\sin^2\gamma_A$$

$$+\sin^2\xi\sin^2\gamma_p\cos^2\gamma_A + \cos^2\xi\cos^2\gamma_p\cos^2\gamma_A$$

$$+\cos^2\xi\sin^2\gamma_p\sin^2\gamma_A) - \frac{1}{2}(\cos^2\gamma_p\sin^2\gamma_A\cos^2\xi$$

$$+\sin^2\gamma_p\cos^2\gamma_A\cos^2\xi + \cos^2\gamma_p\cos^2\gamma_A\sin^2\xi$$

$$+\sin^2\gamma_p\sin^2\gamma_A\sin^2\xi) + \frac{1}{2}(\sin^2\xi\cos^2\gamma_p\sin^2\gamma_A$$

$$+\sin^2\xi\sin^2\gamma_p\cos^2\gamma_A + \cos^2\xi\cos^2\gamma_p\cos^2\gamma_A$$

$$+\cos^2\xi\sin^2\gamma_p\sin^2\gamma_A) + \frac{1}{2}(\cos^2\gamma_p\sin^2\gamma_A\cos^2\xi$$

$$+\sin^2\gamma_p\cos^2\gamma_A\cos^2\xi + \cos^2\gamma_p\cos^2\gamma_A\sin^2\xi$$

$$+\sin^2\gamma_p\sin^2\gamma_A\sin^2\xi)$$

Combining the first two and the last two terms in brackets

$$|e_t|^2 = \frac{1}{2}\sin 2\gamma_p \sin 2\gamma_A + \frac{1}{2}\Big[\cos^2\gamma_p(\sin^2\gamma_A\sin^2\xi$$

$$+\cos^2\xi\cos^2\gamma_A - \sin^2\gamma_A\cos^2\xi - \cos^2\gamma_A\sin^2\xi)$$

$$-\sin^2\gamma_p(\cos^2\gamma_A\cos^2\xi + \sin^2\gamma_A\sin^2\xi - \sin^2\xi\cos^2\gamma_A$$

$$-\cos^2\xi\sin^2\gamma_A)\Big] + \frac{1}{2}\Big[\sin^2\xi\,(\cos^2\gamma_p\sin^2\gamma_A +$$

$$+\sin^2\gamma_p\cos^2\gamma_A + \cos^2\gamma_p\cos^2\gamma_A + \sin^2\gamma_A\sin^2\gamma_p)$$

$$+\cos^2\xi\,(\cos^2\gamma_p\cos^2\gamma_A + \sin^2\gamma_p\sin^2\gamma_A + \cos^2\gamma_p\sin^2\gamma_A + \sin^2\gamma_p\cos^2\gamma_A)$$

$$|e_t|^2 = \frac{1}{2}\sin 2\gamma_p\sin 2\gamma_A + \frac{1}{2}\cos 2\gamma_p\left[\cos^2\xi\,(\cos^2\gamma_A - \sin^2\gamma_A) - \sin^2\xi\,(\cos^2\gamma_A - \sin^2\gamma_A)\right]$$

$$+\frac{1}{2}\left[\cos^2\gamma_p(\sin^2\gamma_A + \cos^2\gamma_A) + \sin^2\gamma_p(\cos^2\gamma_A + \sin^2\gamma_A)\right]$$

$$= \frac{1}{2}\sin 2\gamma_p\sin 2\gamma_A + \frac{1}{2}\cos 2\gamma_p\cos 2\xi\cos 2\gamma_A + \frac{1}{2}$$

$$|e_t|^2 = \frac{1}{2} + \frac{1}{2}(\sin 2\gamma_p\sin 2\gamma_A + \cos 2\gamma_p\cos 2\gamma_A\cos 2\xi) \tag{90}$$

The angles $2\gamma_A$, $2\gamma_p$ have the usual interpretation on the Poincaré sphere as shown in Fig. 24.

When the Law of Cosines for Sides (see appendix) is applied to the triangle LAP of Fig. 24, there results

$$\cos \widehat{AP} = \cos(\frac{\pi}{2} - 2\gamma_A)\cos(\frac{\pi}{2} - 2\gamma_p) + \sin(\frac{\pi}{2} - 2\gamma_A)\sin(\frac{\pi}{2} - 2\gamma_p)\cos 2\xi \tag{91}$$

or,

$$\cos \widehat{AP} = \sin 2\gamma_A\sin 2\gamma_p + \cos 2\gamma_A\cos 2\gamma_p\cos 2\xi \tag{92}$$

Comparison of (92) and (90) reveals that

$$|e_t|^2 = \frac{1}{2} + \frac{1}{2}\cos PA = \cos^2\frac{\widehat{PA}}{2}$$

When the original intensity is unity, the ratio of transmitted to original intensities is

$$I_t = \cos^2\frac{\widehat{PA}}{2} \tag{93}$$

Although in this treatment use was made of an elliptic analyzer employing an exact compensator, the results hold generally. As discussed In Chapter One, Section III, there are two settings θ_A of an inexact compensator which give compensation. They are the θ' and θ'' of Equation (61). Therefore, the state A of an elliptic analyzer which uses an inexact compensator cannot be found directly from the compensator and nicol prism settings, but must be calculated using the equations summarized at the end of Section III, Chapter One. Proceeding thus with P and A known, Equation (93) gives the fraction of intensity that is passed by the analyzer.

Of particular interest in the following sections will be the case when A is a linear state (i.e., A lies on the equator of the Poincaré sphere), and the analyzer consists solely of a nicol prism (linear analyzer).

II. INTENSITY METHOD FOR DETERMINING Δ AND ψ WITH LINEAR INCIDENCE

Suppose linearly polarized light is incident on a metal surface, with the electric vector making an angle of 45° with the plane of incidence. The reflected light which is in, general, elliptically polarized is characterized by the phase difference Δ between the electric field components parallel and normal to the plane of incidence and by the ratio

$$\tan \psi \equiv \frac{B}{A} \tag{94}$$

of the amplitudes of these components.

The reflected light can be analyzed by passing it through a rotating nicol prism* and plotting the intensity of the light transmitted as a function of the angle β between the prism's transmission direction and the plane of incidence.

The polarization state of the incident light is represented by the point P_o located at an azimuth of 90° on the equator of the Poincaré sphere (see Fig. 25). The reference or zero azimuth H corresponds to light that is linearly polarized parallel to the plane of incidence.

Upon reflection, the state is elliptical and is represented by the point P_1 on the sphere. The sides and angles of the right spherical triangle HMP_1 are interpreted physically as explained in the caption of Fig. 25.

* No compensator is used with this analysis.

The polarization state A is that state which is completely transmitted by the analyzer. If the transmission axis of the analyzer forms an angle β with the plane of incidence, then the azimuth of the Point A in Poincaré space is 2β . If $\widehat{P_1A}$ is the length of the arc of a great circle connecting P_1 and A, then the intensity transmitted by the analyzer relative to that incident, according to (93), is given by

$$I = \cos^2 \frac{\widehat{P_1A}}{2} \tag{95}$$

If two points P_1 and P_2 on a sphere have longitudes $2\theta_1$, $2\theta_2$ and latitudes $2\gamma_1$, $2\gamma_2$, then the distance between them in given by*

$$\cos \widehat{P_1P_2} = \cos 2\gamma_1 \cos 2\gamma_2 \cos 2(\theta_2 - \theta_1) + \sin 2\gamma_1 \sin 2\gamma_2 \tag{96}$$

The latitude of the Point A in Fig. 25 is zero ($\gamma_2 = 0$), so Equation (96) gives, for the arc P_1A

$$\cos \widehat{P_1A} = \cos \widehat{MP_1} \cos (2\beta - \widehat{HM}) \tag{97}$$

From the right spherical triangle HP_1M,

$$\cos \widehat{HM} = \frac{\cos 2\psi}{\cos \widehat{MP_1}} \tag{98}$$

$$\sin \widehat{HM} = \tan \widehat{MP_1} \operatorname{ctn} \Delta \tag{99}$$

Equation (97) can be written

$$\cos \widehat{P_1A} = \cos \widehat{MP_1} \left[\cos 2\beta \cos \widehat{HM} + \sin 2\beta \sin \widehat{HM} \right]$$

Substituting from (98) and (99)

$$\cos \widehat{P_1A} = \cos \widehat{MP_1} \left[\cos 2\beta \frac{\cos 2\psi}{\cos \widehat{MP_1}} + \sin 2\beta \tan \widehat{MP_1} \operatorname{ctn} \Delta \right]$$

* A derivation of this formula is given in the Appendix, pgs. 4 and 5.

$$\cos P_1A = \cos 2\beta \cos 2\psi + \sin 2\beta \operatorname{ctn} \Delta \sin MP_1 \tag{100}$$

Next, Equation (96) is used to find the distance $\widehat{P_1P_0}$

$$\cos \widehat{P_1P_0} = \cos \widehat{MP_1} \cos (90^\circ - \widehat{HM})$$

$$\cos \widehat{P_1P_0} = \cos \widehat{MP_1} \sin \widehat{HM} \tag{101}$$

Substituting from (99), (101) becomes

$$\cos \widehat{P_1P_0} = \cos \widehat{MP_1} \tan \widehat{MP_1} \operatorname{ctn} \Delta$$

$$\cos \widehat{P_1P_0} = \sin \widehat{MP_1} \operatorname{ctn} \Delta \tag{102}$$

Substitution of (102) into (100) leaves

$$\cos \widehat{P_1A} = \cos 2\beta \cos 2\psi + \sin 2\beta \cos \widehat{P_1P_0} \tag{103}$$

Apply the Law of Cosines for Sides to the oblique spherical triangle $\widehat{HP_1P_0}$ and find

$$\cos \widehat{P_1P_0} = \cos 2\psi \underbrace{\cos HP_0}_{0} + \sin 2\psi \underbrace{\sin 90}_{1} \cos \Delta$$

$$\cos \widehat{P_1P_0} = \sin 2\psi \cos \Delta \tag{104}$$

Now substitute (104) into (103) and have

$$\cos \widehat{P_1A} = \cos 2\beta \cos 2\psi + \sin 2\beta \sin 2\psi \cos \Delta \tag{105}$$

Applying the trigonometric identity

$$\cos^2 t = \frac{1}{2} (1 + \cos 2t) \tag{106}$$

to Equation (95), there results

$$I = \cos^2 \frac{\widehat{P_1A}}{2} = \frac{1}{2} (1 + \cos \widehat{P_1A}) \tag{107}$$

or, upon substitution from (105)

$$I = \frac{1}{2}\left(1 + \cos 2\beta \cos 2\psi + \sin 2\beta \sin 2\psi \cos \Delta\right) \tag{108}$$

With the trigonometric identity (106),

$$\cos \Delta = 2\cos^2 \frac{\Delta}{2} - 1$$

$$I = \frac{1}{2}\left[1 + \cos 2\beta \cos 2\psi + \sin 2\beta \sin 2\psi \left(2\cos^2 \frac{\Delta}{2} - 1\right)\right]$$

$$I = \frac{1}{2}\left[1 + \cos 2\beta \cos 2\psi - \sin 2\beta \sin 2\psi + 2\sin 2\beta \sin 2\psi \cos^2 \frac{\Delta}{2}\right]$$

$$I = \frac{1}{2}\left[1 + \cos 2(\beta + \psi)\right] + \sin 2\beta \sin 2\psi \cos^2 \frac{\Delta}{2}$$

Again, applying (106),

$$I = \cos^2(\beta + \psi) + \sin 2\beta \sin 2\psi \cos^2 \frac{\Delta}{2} \tag{109}$$

Where β is the position of the analyzer's transmission axis, $\tan \psi$ the amplitude ratio of normal to parallel components and Δ their phase difference.

III. INTERPRETATION OF INTENSITY MEASUREMENTS

As the analyzer is rotated, the transmitted intensity varies, since the distance $\widehat{P_1A}$ (Fig. 25) changes. When the analyzer is at the same azimuth as the point P_1, the arc $\widehat{P_1A}$ will be at its shortest possible length. Thus, since the cosine function decreases as the argument increases from zero to $\frac{\pi}{2}$, the intensity will be a maximum when P_1 and A have the same azimuth. But a maximum transmitted intensely occurs when the transmission direction of the analyzer is parallel to the major axis of the ellipse. Thus,

$$\beta_{I_{max}} = \theta \tag{110}$$

Where βI_{max} is the setting of the analyzer when the transmitted intensity is a maximum, and θ is the orientation of the major axis of the ellipse with respect to the plane of incidence. The azimuths of both points A and P_1 are then 2θ on the Poincaré sphere. As the analyzer continues to rotate it will, at an angle $\theta + \frac{\pi}{2}$, come to a minimum as the transmission direction is aligned with the minor axis of the ellipse. Thus, in one rotation of 360° the transmitted intensity will go through two maxima and two minima corresponding to settings along the two major and minor radii respectively. A plot of intensity versus analyzer angle might look like that shown in Fig. 26.

Since the intensity is proportional to the square of the amplitude, the ratio of minor to major diameters of the ellipse can be found from

$$\tan\gamma \equiv \frac{b}{a} = \pm\sqrt{\frac{I_{max}}{I_{max}}} \tag{111}$$

The + sign is chosen when the polarization is left-hand and the - sign designates right-hand polarization.

When θ and the magnitude of γ are known, ψ can be found from the previously derived Equation (30)

$$\cos 2\psi = \cos 2\gamma \cos 2\theta \tag{112}$$

Equation (112) is found from the right spherical triangel HMP_1 since the latitude of P_1 is 2γ by definition(Fig. 9).

Once ψ is known, Δ can be found from (109) with the measured value of I.

If one makes the assumption that ψ does not change with time,* and if the time dependence of β is known, a Δ -time plot can be made directly from (109) once the value of ψ is chosen and the time variation of I is determined.

If the time variation of ψ is not neglected, a new value of ψ can be determined with the curve from each rotation of the analyzer -- first finding γ and θ and then ψ from (112). For such a measurement to be precise, the exact dependence of β on time must be known.

An alternate procedure would be to measure the intensities when the transmission direction of the analyzer is parallel and normal to the plane of incidence. From the measured intensities $I_{parallel}$ and I_{normal} ψ can be determined, as in (94) from

$$\tan \psi = \sqrt{\frac{I_{normal}}{I_{parallel}}} \tag{113}$$

Then, Δ can be determined from (109). The handedness of the elliptical

* This assumption is approximately true when studying the early stages of film growth on metal surfaces.

oscillation will be

right-handed	when Δ is on the range
	$-\pi < \Delta < 0$
	$\pi < \Delta < 2\pi$
	$3\pi < \Delta < 4\pi$, etc.
left-handed	$-2\pi < \Delta < -\pi$
	$0 < \Delta < \pi$
	$2\pi < \Delta < 3\pi$, etc.

as shown in Chapter One, Section I.

Whichever procedure is adopted, the accuracy will depend upon how fast the analyzer is rotated. The analyzer should make one complete rotation in such a short time that the ellipse does not change by a measurable amount. This time of rotation will be limited by the corresponding short time interval available during which to make measurements in the desired positions.

IV. INTENSITY METHOD FOR DETERMINING Δ AND ψ WITH ELLIPTIC INCIDENCE

When polarized light is reflected from a metal surface, the state of polarization of the reflected light depends upon two factors.

(1) the phase difference Δs introduced on reflection between electric field compenents parallel and normal to the plane of incidence.

(2) the amplitude attenuation undergone on reflection. If the ratios of perpendicular to parallel amplitudes are $\tan\psi_i$ $\tan\psi_r$ in the incident and reflected beams respectively, the change can be represented by the parameter ψ where as in (13)

$$\tan\psi \equiv \frac{\tan\psi_r}{\tan\psi_i} \tag{114}$$

Consider the ellipsometer geometry illustrated schematically in Fig. 27. The incident light is first linearly polarized by a polarizer, the transmission direction of which is at an angle α with the plane of incidence. Then the light is passed through a compensator which adds a phase difference δ to the linear components normal and parallel to its axes. The light is then reflected from a metal surface and passes through an analyzer whose transmission axis is at an angle β to the plane of incidence.

As shown in Section I of this chapter, it is a feature of the Poincaré representation that, given an analyzer which <u>transmits</u> completely light of polarization state A, the fraction I of the intensity of light of polarization state P emerging from the analyzer is given by

$$I = \cos^2 \frac{\widehat{PA}}{2}^{*} \tag{93}$$

where PA is the arc of the great circle on the Poincaré sphere joining the points P and A.

With the Poincaré representation, the state of the linearly polarized light that emerges from the polarizer can be represented by a point P_0 on the equator of the unit sphere (Fig. 28). If the point H is chosen to represent light that is linearly polarized parallel to the plane of incidence, then P_0 lies at a distance (azimuth) 2α along the equator from H. Again, α is the angle that the polarizer's transmission direction makes with the plane of incidence. On emerging from the compensator, the light is in the elliptical state P_1. This state is found from P_0 by rotating the sphere counter-clockwise about the diameter passing through F through an angle δ . Here δ is the phase difference introduced between the components of the light parallel to the compensator axes. For an exact Sénarmont compensator, δ is $\frac{\pi}{2}$. In going from state P_0 to P_1 a phase difference Δ_i is introduced between the components parallel and normal to the plane of incidence.

Upon reflection, an additional phase difference Δ_s is added to the components parallel and normal to the plane of incidence. The light is then in the elliptic polarization state P_2. The intensity of the elliptic light of state P_2 that is transmitted by the analyzer when its transmission axis is at an angle β to the plane of incidence (so that the light it passes completely is represented by the point A on the equator having azimuth 2β) is given by Equation (93) with P replaced by P_2.

* When the ellipse varies with time, (93) gives only an instantaneous intensity.

In going from state P_0 to State P_1 (Fig. 28), a phase difference was introduced between the components parallel to the axes of the compensator, but there was no attenuation of the amplitudes of these components. Since the only change in the polarization is a phase change, the arcs $\widehat{FP}_0$ and $\widehat{FP}_1$ are equal. However, on reflection, in general, there is an attenuation, so the arcs $\widehat{HP}_1$ and $\widehat{HP}_2$ are in general not equal.

Finally, it can be seen from Fig. 28 that if

$$\left.\begin{aligned} \Delta_s &= -\Delta_i \\ \Delta_s &= \pi - \Delta_i \end{aligned}\right\} \tag{115}$$

the reflected state will be linear and the transmitted intensity will be a maximum when A and P_2 coincide on the equator.

When Δ_s has any other value than those given by (115), a varying amount of light will be transmitted by a rotating analyzer. The analysis and interpretation of the varying intensity that is transmitted by the analyzer is given in Section III of this chapter. Left-hand polarization for the reflected light will occur when the total phase difference

$$\Delta_r \equiv \Delta_i + \Delta_s \tag{116}$$

between the components parallel and normal to the plane of incidence is on the range

$$-2\pi < \Delta_r < -\pi, \qquad 0 < \Delta_r < \pi, \qquad 2\pi < \Delta_r < 3\pi, \text{ etc.}$$

The oscillation will be right-hand when

$$-\pi < \Delta_r < 0, \qquad \pi < \Delta_r < 2\pi, \qquad 3\pi < \Delta_r < 4\pi, \text{ etc.}$$

For the other cases ($\Delta_r = 0, \pi$, etc.) the oscillation is linear.

It remains to find the polarization state P_2 (i.e., the point of latitude $2\gamma_r$ and longitude $2\theta_r$) of the reflected light in terms of the polarizer and analyzer azimuths α and β, the relative amplitude diminution ψ and the phase retardation Δ_s introduced by the reflection. From the oblique spherical triangle HP_1F of Fig. 28,

$$\frac{\sin \Delta_i}{\sin \widehat{FP_1}} = \frac{\sin (\pi - \delta)}{\sin \widehat{HP_1}} \tag{117}$$

But

$$\widehat{FP_1} = \widehat{FP_0} = 2\alpha - \frac{\pi}{2}$$

$$\widehat{HP_1} = 2\psi_i$$

$$\sin (\pi - \delta) = \sin\delta$$

So

$$\sin \Delta_i = \frac{\sin (2\alpha - \frac{\pi}{2}) \sin\delta}{\sin 2\psi_i} \tag{118}$$

When the compensator is exact, $\delta = \frac{\pi}{2}$ and $2\psi = 90°$. The latter fact can be verified by applying Napier's rules to the triangle HP_1F

$$\cos 2\psi_i = \underbrace{\cos \frac{\pi}{2}}_{0} \cos \widehat{FP_1}$$

$$2\psi_i = 90°$$

Thus, for the case of an exact compensator

$$\sin \Delta_i = \sin (2\alpha - \frac{\pi}{2}) \tag{119}$$

$$\Delta_i = 2\alpha - \frac{\pi}{2}$$

A. Exact Compensator

Assume that the compensator is exact, i.e., that $\delta = \frac{\pi}{2}$ and Equation (119) holds.

From the right spherical triangle HP_2M_r of Fig. 28, one has

$$\sin\,(2\pi - \widehat{HM_r}) = \tan\,\widehat{M_rP_2}\,\cot\,(\pi - \Delta_r)$$

$$-\sin\,\widehat{HM_r} = \tan\,\widehat{M_rP_2}\,(-\mathrm{ctn}\,\Delta_r)$$

$$\sin\,\widehat{HM_r} = \tan\,\widehat{M_rP_2}\,\mathrm{ctn}\,\Delta_r \tag{120}$$

Also, from the same triangle,

$$\cos\,(2\pi - \widehat{HM_r}) = \frac{\cos\,2\psi_r}{\cos\,\widehat{M_rP_2}} \tag{121}$$

since $2\psi_i = 90°$, $\tan\,\psi_i = \tan\,45° = 1$ and from (114)

$$\tan\,\psi = \tan\,\psi_r \tag{122}$$

so

$$\cos\,\widehat{HM_r} = \frac{\cos\,2\psi}{\cos\,\widehat{M_rP_2}} \tag{121a}$$

Applying Equation (16) to find the length of $\widehat{P_2A}$, and remembering that the latitude $2\gamma_2$ of A is zero,

$$\cos\,\widehat{P_2A} = \cos\,\widehat{M_rP_2}\,\cos\,(2\beta - \widehat{HM_r}) \tag{123}$$

$$\cos\,\widehat{P_2A} = \cos\,\widehat{M_rP_2}\left[\cos\,2\beta\,\cos\,\widehat{HM_r} + \sin\,2\beta\,\sin\,\widehat{HM_r}\right]$$

Substituting from (120) and (121a),

$$\cos P_2A = \cos \widehat{M_rP_2} \quad \frac{\cos 2\beta \cos 2\psi}{\cos \widehat{M_rP_2}} + \sin 2\beta \tan \widehat{M_rP_2} \operatorname{ctn} \Delta_r$$

$$\cos \widehat{P_2A} = \cos 2\beta \cos 2\psi + \sin 2\beta \operatorname{ctn} \Delta_r \sin \widehat{M_rP_2} \tag{124}$$

Applying Equation (96) to find the distance P_2P_0,

$$\cos \widehat{P_2P_0} = \cos \widehat{M_rP_2} \cos (2\alpha - \widehat{HM_r})$$

which results in

$$\cos \widehat{P_2P_0} = \cos 2\alpha \cos 2\psi + \sin 2\alpha \operatorname{ctn} \Delta_r \sin \widehat{M_rP_2} \tag{125}$$

which is analogous to (124).

Equation (125) can be solved for $\sin \widehat{M_rP_2}$ to yield

$$\sin \widehat{M_rP_2} = \frac{\cos \widehat{P_2P_0} - \cos 2\alpha \cos 2\psi}{\sin 2\alpha \operatorname{ctn} \Delta_r} \tag{125a}$$

Substitute (125a) into (124) to get

$$\cos \widehat{P_2A} = \cos 2\beta \cos 2\psi + \frac{\sin 2\beta \operatorname{ctn} \Delta_r (\cos \widehat{P_2P_0} - \cos 2\alpha \cos 2\psi)}{\sin 2\alpha \operatorname{ctn} \Delta_r}$$

$$\cos \widehat{P_2A} = \cos 2\beta \cos 2\psi + \frac{\sin 2\beta}{\sin 2\alpha} (\cos \widehat{P_2P_0} - \cos 2\alpha \cos 2\psi) \tag{126}$$

Next, apply the Law of Cosines for Sides to the oblique triangle HP_2P_0 to get

$$\cos \widehat{P_2P_0} = \cos 2\psi_r \cos 2\alpha + \sin 2\psi_r \sin 2\alpha \cos \Delta_r \tag{127}$$

Insert (127) into (126) to get,

$$\cos \widehat{P_2A} = \cos 2\psi \cos 2\beta + \frac{\sin 2\beta}{\sin 2\alpha} (\cos 2\psi \cos 2\alpha + \sin 2\psi \sin 2\alpha \cos \Delta_r)$$

$$- \frac{\sin 2\beta}{\sin 2\alpha} \cos 2\alpha \cos 2\psi$$

$$\cos \widehat{P_2A} = \cos 2\psi \cos 2\beta + \sin 2\beta \sin 2\psi \cos \Delta_r \tag{128}$$

Applying the trigonometric identity

$$\cos^2 t = \frac{1}{2} (1 + \cos 2t) \tag{106}$$

to Equation (93) and replacing the general point P with the particular point P_2

$$I = \cos^2 \frac{\widehat{P_2A}}{2} = \frac{1}{2} (1 + \cos \widehat{P_2A}) \tag{129}$$

Substituting (128) into (129),

$$I = \frac{1}{2} (1 + \cos 2\psi \cos 2\beta + \sin 2\beta \sin 2\psi \cos \Delta_r) \tag{130}$$

Apply the identity

$$\sin^2 t = \frac{1}{2} (1 - \cos 2t) \tag{131}$$

$$I = \frac{1}{2} (1 + \cos 2\psi \cos 2\beta + \sin 2\beta \sin 2\psi (1 - \sin^2 \frac{\Delta_r}{2}) \quad)$$

$$= \frac{1}{2} (1 + \cos 2\psi \cos 2\beta + \sin 2\beta \sin 2\psi - 2\sin 2\beta \sin 2\psi \sin^2 \frac{\Delta_r}{2})$$

$$I = \frac{1}{2} (1 + \cos 2(\psi - \beta) - 2\sin 2\beta \sin 2\psi \sin^2 \frac{\Delta_r}{2}$$

Applying (106),

$$I = \cos^2 (\psi - \beta) - \sin 2\beta \sin 2\psi \sin^2 \frac{\Delta_r}{2} \tag{132}$$

Equation (116) becomes, by (119),

$$\Delta_r = \Delta_s + 2\alpha - \frac{\pi}{2} \tag{133}$$

so that

$$I = \cos^2(\psi - \beta) - \sin 2\beta \sin 2\psi \sin^2\left(\frac{\Delta_s + 2\alpha - \frac{\pi}{2}}{2}\right) \tag{134}$$

If identity (126) is used instead of (131) to simplify (130) one has

$$I = \cos^2(\beta + \psi) + \sin 2\beta \sin 2\psi \cos^2\left(\frac{\Delta_s + 2\alpha - \frac{\pi}{2}}{2}\right) \tag{135}$$

Equation (135) reduces to (109) when $\alpha = \frac{\pi}{4}$. That is, when the linearly polarized light is incident parallel to the fast axis of the compensator, it is transmitted unchanged to the reflecting surface and the incidence is linear.

B. Inexact Compensator

When the compensator is not exact, Equations (119) and (122) are no longer valid since the angle P_1FH (Fig.28) is then no longer a right angle. The steps leading to Equation (130) can be repeated for the case of an inexact compensator if ψ is replaced everywhere by ψ_r. Thus, by analogy to (130), there results

$$I = \frac{1}{2}(1 + \cos 2\psi_r \cos 2\beta + \sin 2\beta \sin 2\psi_r \cos \Delta_r) \tag{136}$$

By using the analysis discussed in Section III of this chapter, one can find $|\gamma_r|$ and θ_r. Then ψ_r can be obtained from

$$\cos 2\psi_r = \cos 2\gamma_r \cos 2\theta_r \tag{137}$$

which is Equation (30) of Chapter One. In addition, Δ_r can be found from Equation (29) of Chapter One,

$$\cos \Delta_r = \frac{\tan 2\theta_r}{\tan 2\psi_r} \tag{138}$$

In order to find the amplitude diminution $\tan \psi$ and the phase change Δ_s on reflection one must know Δ_i and ψ_i. These can be obtained by applying the Law of Cosines (see appendix) to the oblique triangle HFP_1 of Fig. 28. Thus, remembering that $\widehat{HF} = 90°$, and $\widehat{FP_1} = \widehat{FP_0} = 2\alpha - 90°$,

$$\cos 2\psi_i = \underbrace{\cos \widehat{HF}}_{0} \cos(2\alpha - 90) + \underbrace{\sin \widehat{HF}}_{1} \sin(2\alpha - 90°) \cos(\pi - \delta)$$

or

$$\cos 2\psi_i = \cos 2\alpha \cos\delta \tag{139}$$

Also,

$$\cos(2\alpha - 90) = \underbrace{\cos \widehat{HF}}_{0} \cos 2\psi_i + \underbrace{\sin \widehat{HF}}_{1} \sin 2\psi_i \cos \Delta_i$$

$$\sin 2\alpha = \sin 2\psi_i \cos \Delta_i \tag{140}$$

When the time variation of β is known, and the time variation of ψ_r is computed by making successive applications of (137) with each 360° sweep of the analyzer, the time variation of Δ_r can be found from (136). The phase difference Δ_i, for a stationary polarizer can be found once and for all from (139) and (140) so that the time variation of Δ_s can then be found from

$$\Delta_s = \Delta_r - \Delta_i \tag{116}$$

The amplitude ratio ψ_i can be found once and for all from (139) for a stationary analyzer so that the time variation of ψ can be found from

$$\tan \psi \equiv \frac{\tan \psi_r}{\tan \psi_i} \tag{114}$$

The intensity method utilizing elliptic incidence appears to have no advantage over that using linearly polarized incident light when the choice of α is arbitrary. However, if the occasion should arise that a rotating polarizer is desired in addition to a rotating analyzer, the consideration of elliptically polarized incident light would be necessary. In such a case the precise variation of α with time must be known in order to determine ψ_i and Δ_i from (139) and (140).

APPENDIX - SPHERICAL TRIGONOMETRY[7]

Napier's rules. -- In a right spherical triangle, with $\gamma = 90°$, there are five other parts, α, β, a, b, c. These five parts can be grouped together in ten different sets of three each. Corresponding to each of these sets there is a formula connecting the three parts, so that by means of one of the ten formulas, when two parts are given, any other part may be found. The ten formulas are[7], with reference to Fig. A1,

1. $\sin a = \sin c \sin \alpha$,
2. $\sin b = \sin c \sin \beta$,
3. $\sin a = \tan b \cot \beta$,
4. $\sin b = \tan a \cot \alpha$,
5. $\cos c = \cos a \cos b$,
6. $\cos c = \cot \alpha \cot \beta$,
7. $\cos \alpha = \cos a \sin \beta$,
8. $\cos \beta = \cos b \sin \alpha$,
9. $\cos \alpha = \tan b \cot c$,
10. $\cos \beta = \tan a \cot c$.

The same source[7] gives the following laws for the oblique triangle in Fig. 2.

I. Law of Sines

$$\frac{\sin \alpha}{\sin a} = \frac{\sin \beta}{\sin b} = \frac{\sin \gamma}{\sin c}$$

II. Law of Cosines for Sides

$$\cos a = \cos b \cos c + \sin b \sin c \cos \alpha$$

and cyclic.

III. Law of Cosines for Angles

$$\cos \alpha = - \cos \beta \cos \gamma + \sin \beta \sin \gamma \cos a$$

and cyclic.

Theorem: The distance between two points on the unit sphere is given by

$$\cos \widehat{P_1P_2} = \cos 2\gamma_1 \cos 2\gamma_2 \cos 2(\theta_2 - \theta_1) + \sin 2\gamma_1 \sin 2\gamma_2 \quad (14)$$

where $2\theta_1$, $2\theta_2$ and $2\gamma_1$, $2\gamma_2$ are the azimuths and latitudes respectively of the points P_1 and P_2.

Proof: (See Figure A3)

Application of Napier's rules to the right spherical triangle AP_2B gives

$$\cos \widehat{AP_2} = \cos 2\gamma_2 \cos 2(\theta_2 - \theta_1) \quad (A)$$

$$\sin \measuredangle P_2AB = \frac{\sin 2\gamma_2}{\sin \widehat{AP_2}} \quad (B)$$

Apply the Law of Cosines for sides to the oblique triangle P_1AP_2 to get

$$\cos \widehat{P_1P_2} = \cos 2\gamma_1 \cos \widehat{AP_2} + \sin 2\gamma_1 \sin \widehat{AP_2} \cos(\tfrac{\pi}{2} - \measuredangle P_2AB) \quad (C)$$

$$\cos \widehat{P_1P_2} = \cos 2\gamma_1 \cos \widehat{AP_2} + \sin 2\gamma_1 \sin \widehat{AP_2} \sin \measuredangle P_2AB$$

From (A) and (B)

$$\cos \widehat{P_1P_2} = \cos 2\gamma_1 \cos 2\gamma_2 \cos 2(\theta_2 - \theta_1) + \sin 2\gamma_1 \sin \widehat{AP_2} \frac{\sin 2\gamma_2}{\sin \widehat{AP_2}}$$

$$\therefore \cos \widehat{P_1P_2} = \cos 2\gamma_1 \cos 2\gamma_2 \cos 2(\theta_2 - \theta_1) + \sin 2\gamma_1 \sin 2\gamma_2 \quad (14)$$

APPENDIX FIGURE CAPTIONS

Fig. A1. Right spherical triangle.

Fig. A2. Oblique spherical triangle.

Fig. A3. Construction used in proof of theorem.

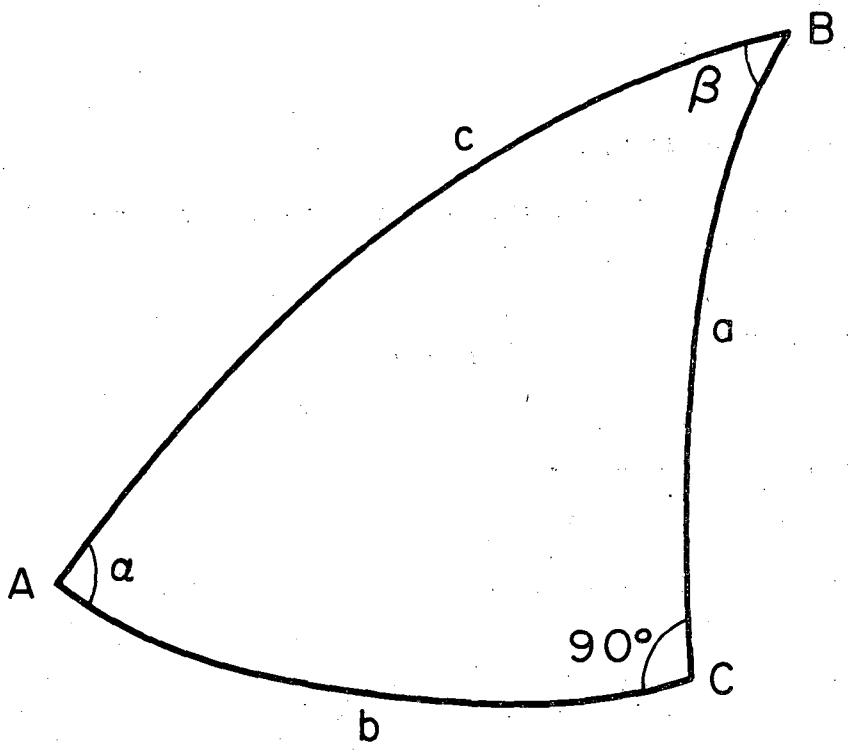

MUB-8184

Fig. A-1

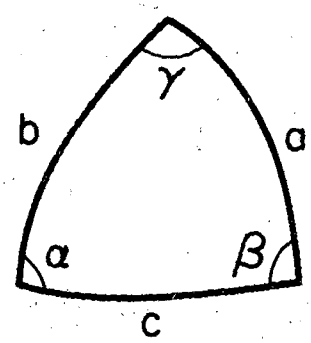

MUB-8185

Fig. A-2

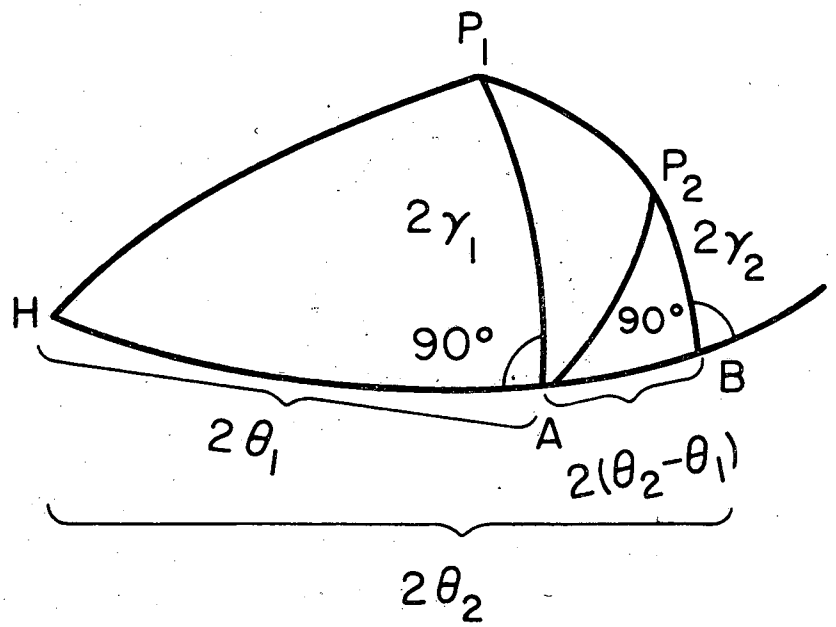

MUB-8186

Fig. A-3

FIGURE CAPTIONS

Fig.1. (a) Electric and magnetic vectors E and H in a linearly polarized monochromatic wave propagating in the z direction.

(b) Representation of linear polarization by considering the electric vector only.

Fig.2. Linear polarization as resultant of two orthogonal linear components in phase.

Fig.3. Elliptical polarization as resultant of two orthogonal linearly polarized sinusoidal components with a mutual phase difference Δ.

Fig.4. Helix in space as the instantaneous representation of an elliptically polarized wave. Propagation of the helix in the z direction through the fixed x y-plane results in the ellipse being traced out.

Fig.5. Dependence of elliptic polarization on phase difference Δ between orthogonal linearly polarized components of amplitude A and B for the case $A > B$.

Fig.6. Dependence of elliptic polarization on phase difference Δ between orthogonal linearly polarized components of amplitude A and B for the case $A < B$. Compensation by quarter wave plate with fast axis parallel minor ellipse axis.

Fig.7. Geometric and physical parameters of elliptic polarization. u v coordinate system parallel to major and minor ellipse half-axes a and b. x direction parallel to plane of incidence. A, B = amplitudes of x,y components. θ = orientation of major ellipse axis, $\tan \psi$ and $\tan \gamma$ = amplitude ratios in x y and u v coordinate systems. r = direction of restored linear polarization.

Fig. 8. Conjugate radii of ellipse.

Fig. 9. (a) The elliptic polarization state P_0 as represented on Poincaré Sphere with $\widehat{HM}$ an arc of the equator.

(b) The right spherical triangle HMP_0 relating the angles 2ψ, 2θ, 2γ and the phase difference Δ.

Fig. 10. Illustration of sign conventions and meaning of the quantities θ, γ. Oscillation seen as observer looks toward the source.

Fig. 11. (a) Resolution of elliptic vibration along major and minor axis.

(b) Resolution of e_u, e_v along x and y.

Fig. 12. Phases of elliptic oscillation when electric vector coincides with coordinate axes.

Fig. 13. Inexact quarter wave plate. Slow axis of inexact compensator is at an angle θ' and extinction axis of analyzer at $\theta' + \gamma'$ at extinction. S and F designate slow and fast axes of compensator respectively. The u axis is chosen to be along the major axis of the ellipse, v is along minor axis.

Fig. 14. Inexact quarter wave plate. Resolution of e_u and e_v along compensator axes S and F.

Fig. 15. Portion of Poincaré sphere showing azimuths S of slow axis of inexact compensator and A of analyzer.

Fig. 16. The actual retardation δ of the inexact compensator leading to the measured parameters θ' and γ' can be correlated with the derived parameters θ, γ, ψ, Δ by considering the right spherical triangle P_0SM in the Poincaré representation.

Fig. 17. Alternate orientation of inexact compensator at extinction.

Fig. 18. Compensation occurs at two settings of the compensator; one with the azimuth of the S_1 axis at $2\theta'$ and the other with the azimuth of the S_2 axis at $\pi + 2(2\theta-\theta')$.

Fig. 19. Illustration of elements in ellipsometer using incident elliptic polarization.

Fig. 20. Orientation of polarizer and compensator with respect to the plane of incidence (x axis) for incident elliptic polarization.

Fig. 21. Incident elliptical polarization P_0. Poincaré representation with P original linearly polarized light of azimuth α falling on compensator of retardation δ and M azimuth of linear vibration along major axis of ellipse.

Fig. 22. Resolution of e_{u_p}, e_{v_p} along axes of $\frac{\lambda}{4}$ wave plate.

Fig. 23. An elliptic analyzer consisting of Sénarmont compensator having slow axis S at angle θ_A from x axis and of nicol prism having transmission axis N at angle θ_N from x axis passes completely light of polarization state A (dashed ellipse). When light of unit intensity but arbitrary polarization P is incident on the above elliptic analyzer, the fraction transmitted is given by Equation (93).

Fig. 24. The quantities $2\gamma_A$, 2ξ, $2\gamma_p$ are related on Poincaré sphere as shown. The point L is a pole of the sphere and represents left-hand circularly polarized light. The point S is the azimuth of the analyzer's slow axis, the point M is the aximuth of the ellipse's major axis, and the point N is the aximuth of the linear analyzer.

Fig.25. The polarization states as represented on Poincaré sphere. H corresponds to light linearly polarized parallel to plane of incidence. M corresponds to light linearly polarized along major axis of ellipse represented by P_1. The angle P_1HM is to be interpreted as the phase difference Δ introduced between parallel and normal components on reflection, while the side $\widehat{HP_1}$ is interpreted as 2ψ.

Fig.26. As analyzer is rotated 360° intensity goes through two maxima and two minima.

Fig.27. Ellipsometer arrangement for intensity method with elliptic incidence.

1) Light source.

2) Polarizer with transmission axis set at angle α with the plane of incidence.

3) Compensator with fast axis at $\frac{\pi}{4}$ to plane of incidence.

4) Reflecting surface.

5) Analyzer set with transmission direction at an angle β to the plane of incidence.

Fig.28. Successive polarization states, Poincaré representation, elliptical incidence, amplitude analysis.

P_o: polarization state as light leaves polarizer.

P_1: polarization state as light leaves compensator.

P_2: polarization state of light after reflection.

A : polarization state of light <u>passed</u> completely by analyzer.

H : linear polarization parallel to plane of incidence.

α : angle between transmission direction of polarizer and plane of incidence.

F: fast axis of compensator.

S: phase shift in compensator.

Δ_i: phase difference between x and y components of incident light.

Δ_s: phase difference between x and y components due to reflection.

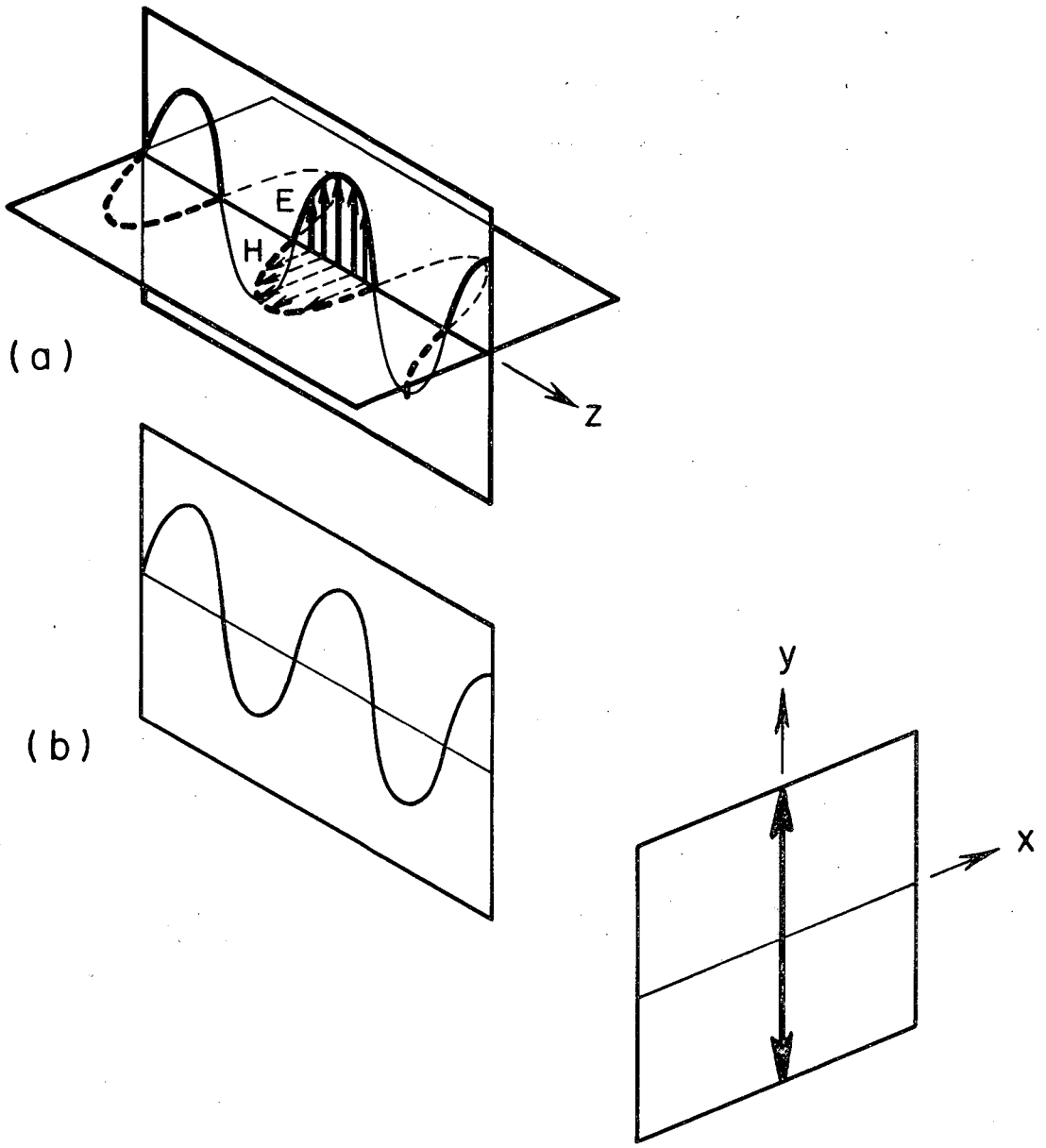

MUB-8163

Fig. 1

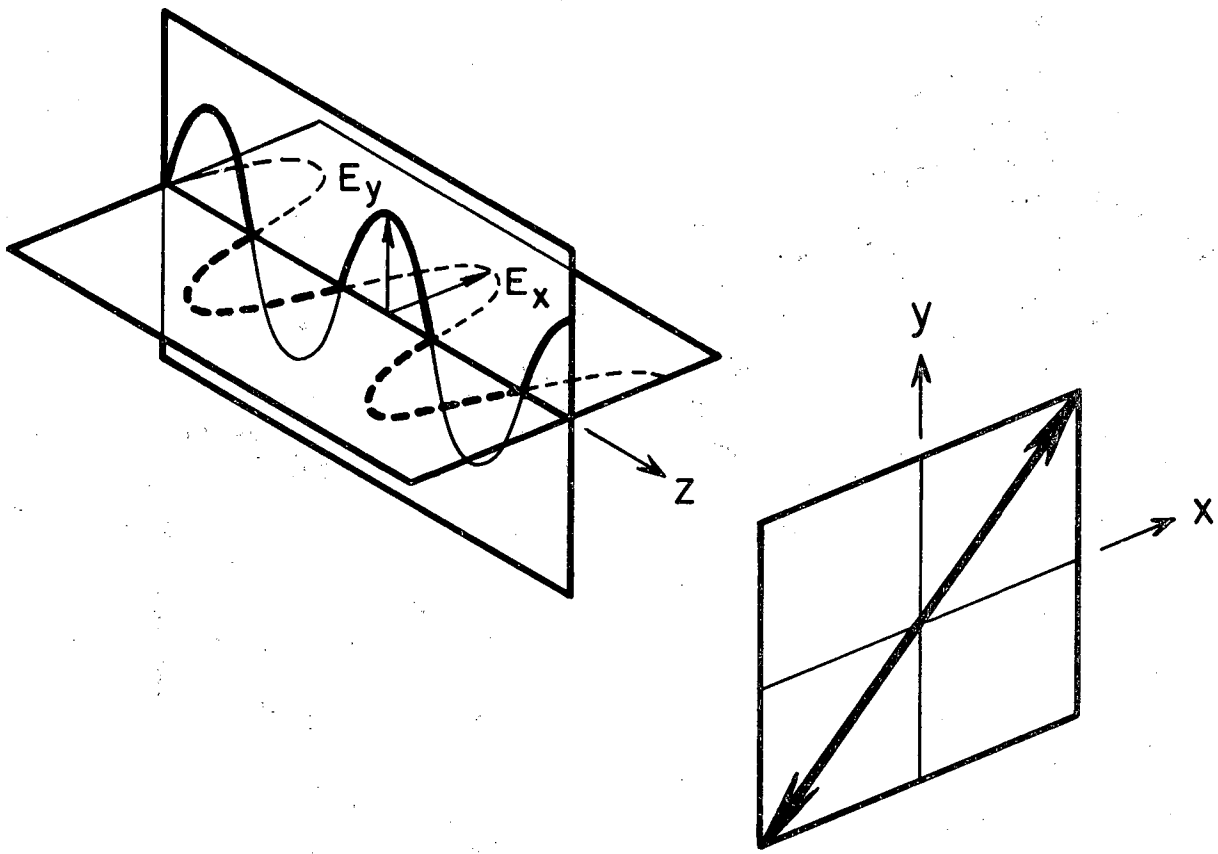

MUB-8164

Fig. 2

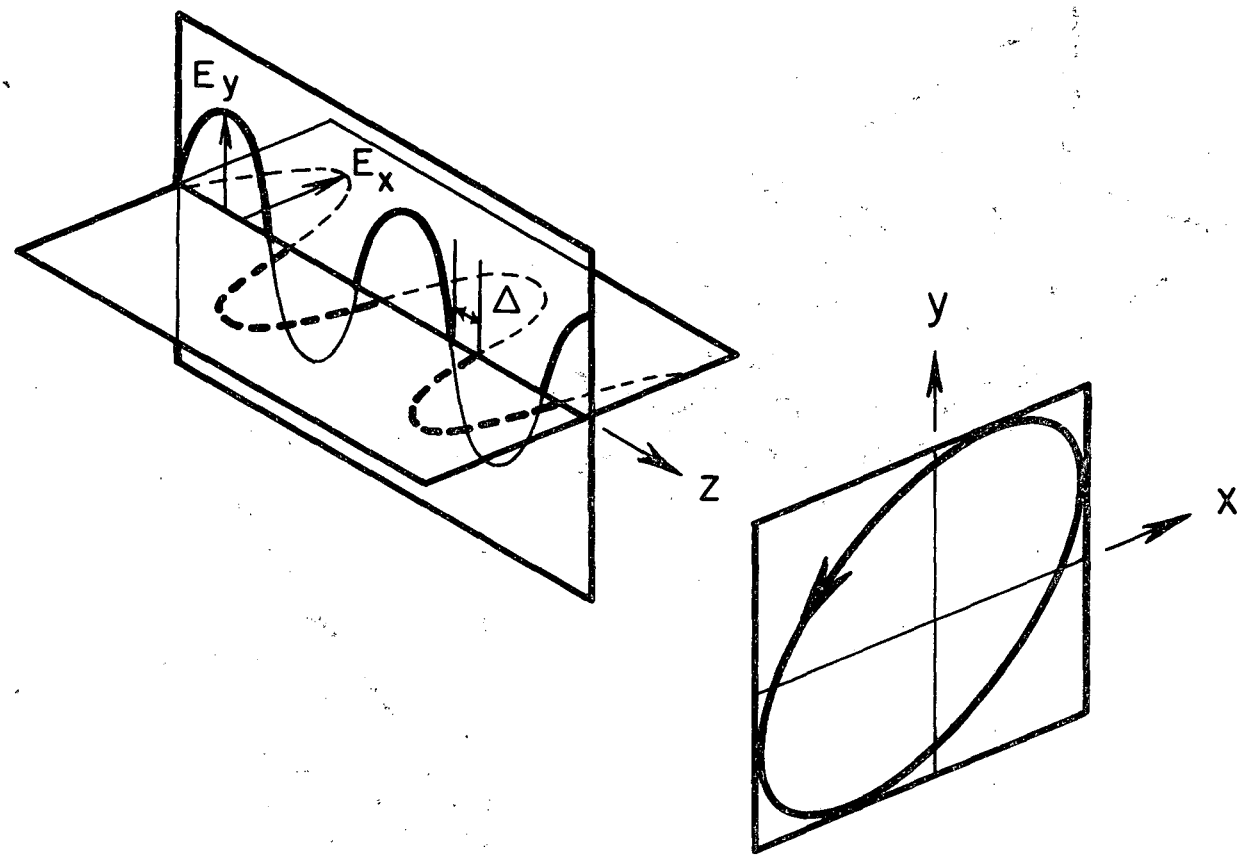

MUB-8165

Fig. 3

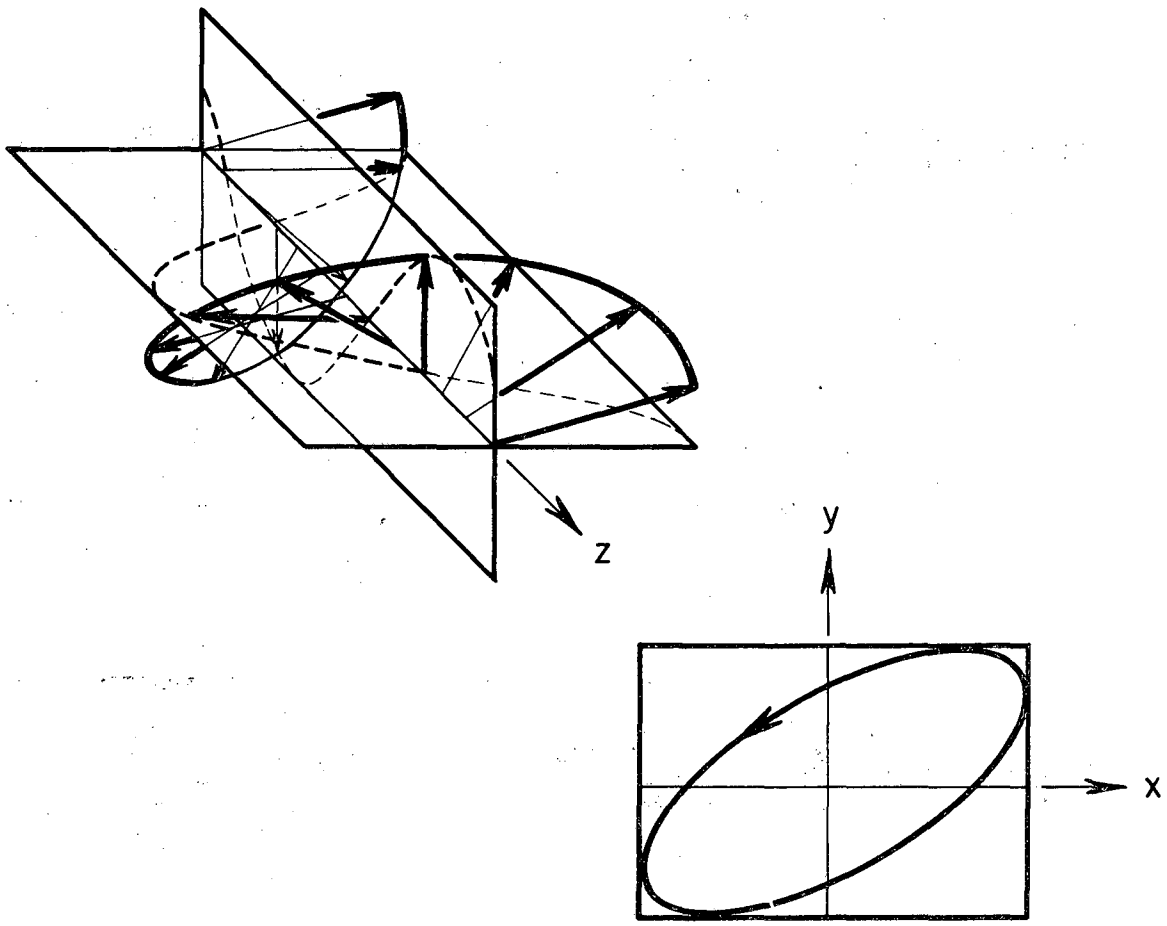

MUB-8166

Fig. 4

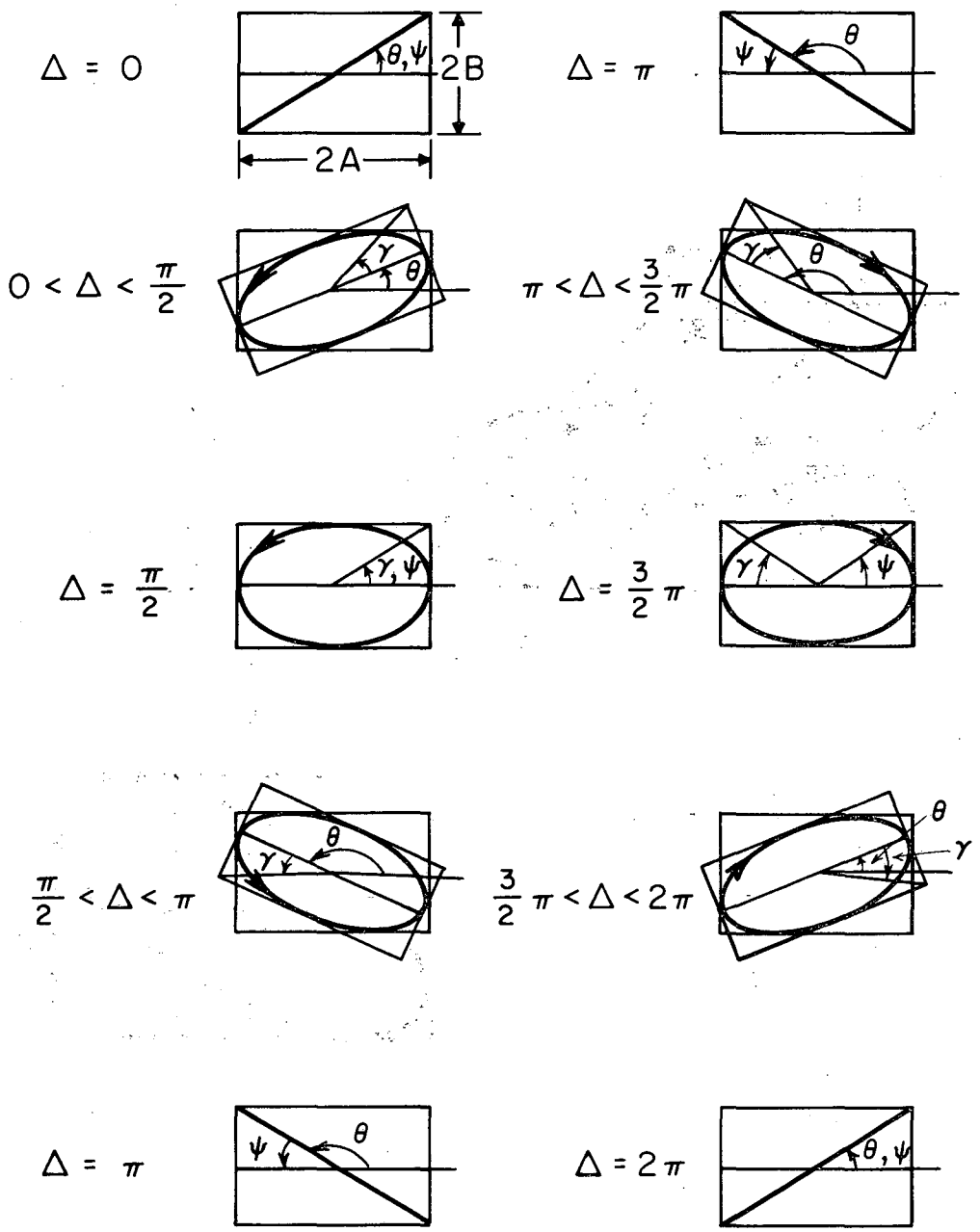

MUB- 8167

Fig. 5

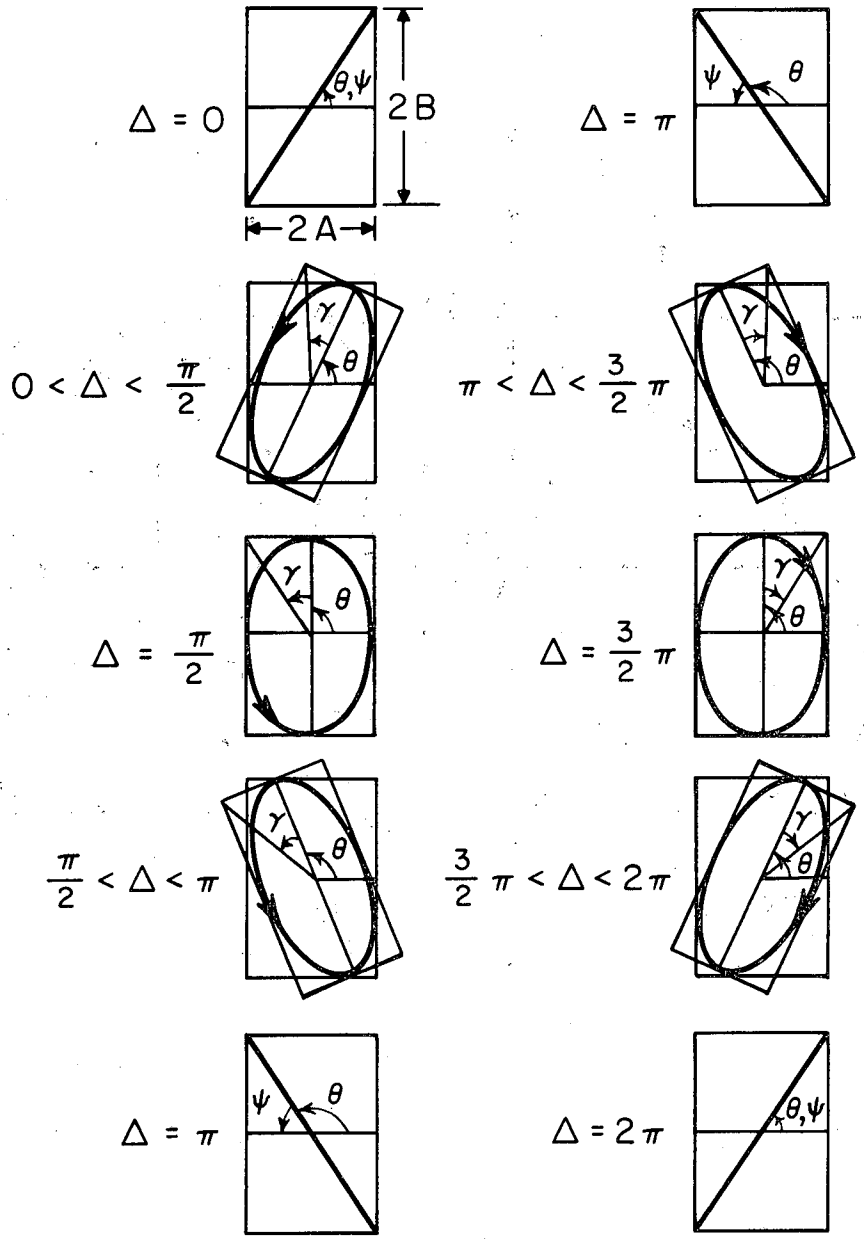

MUB-8168

Fig. 6

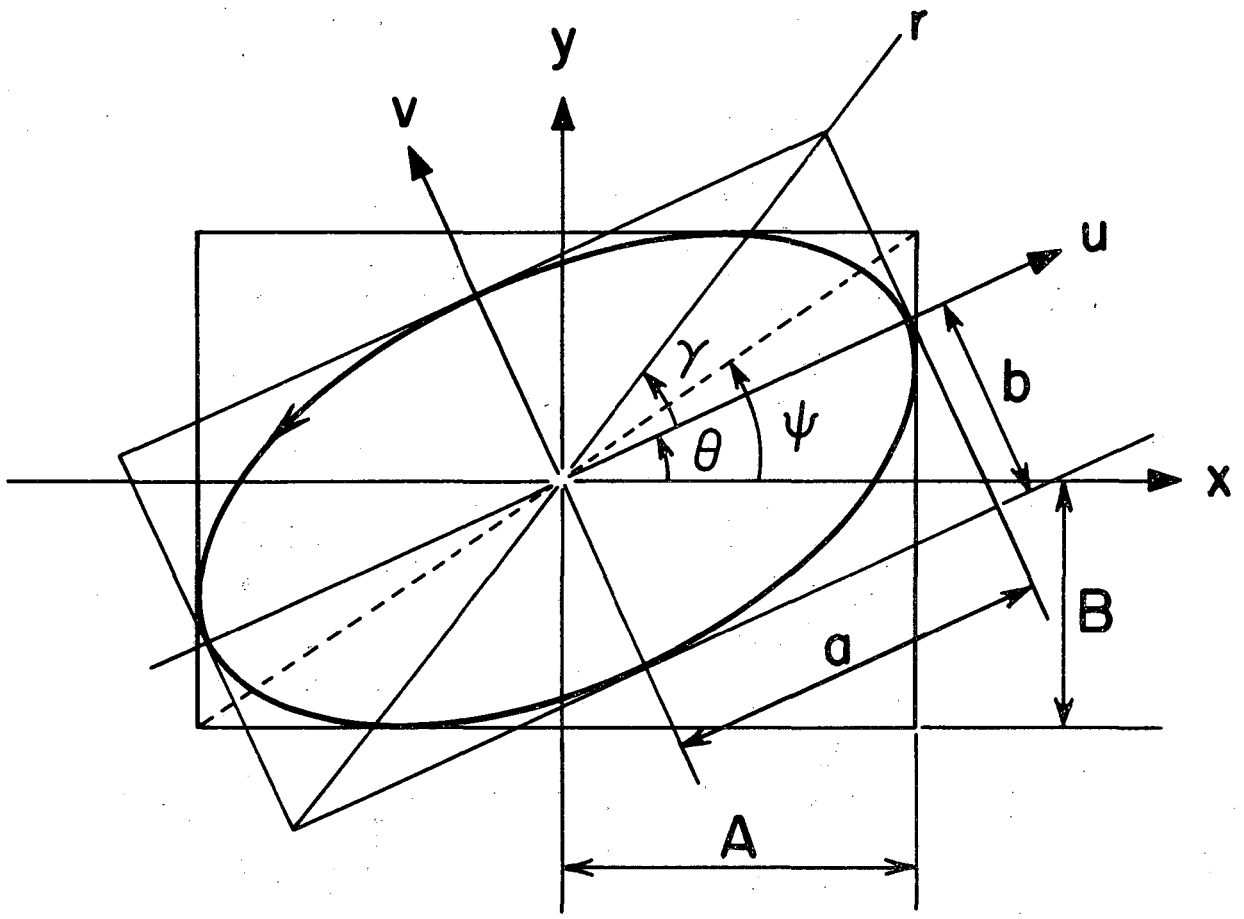

MUB-8157

Fig. 7

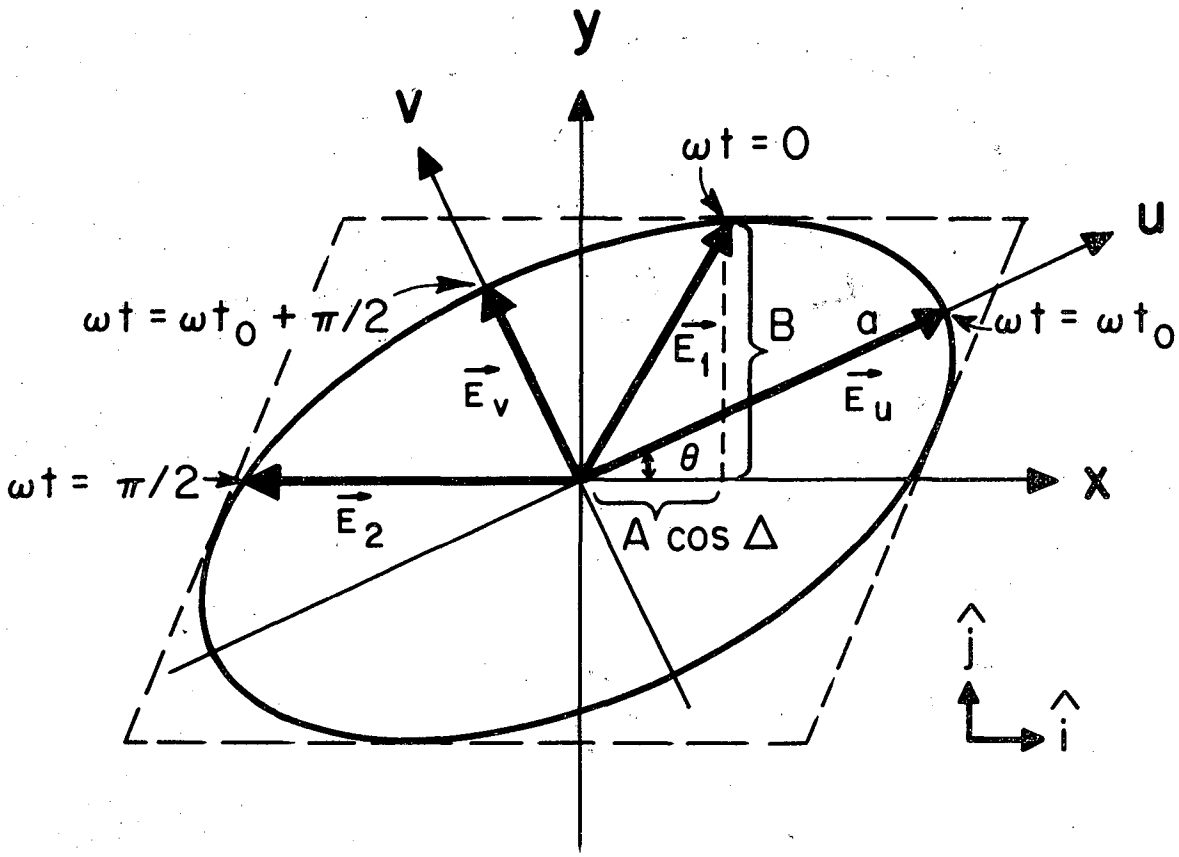

MUB-8158

Fig. 8

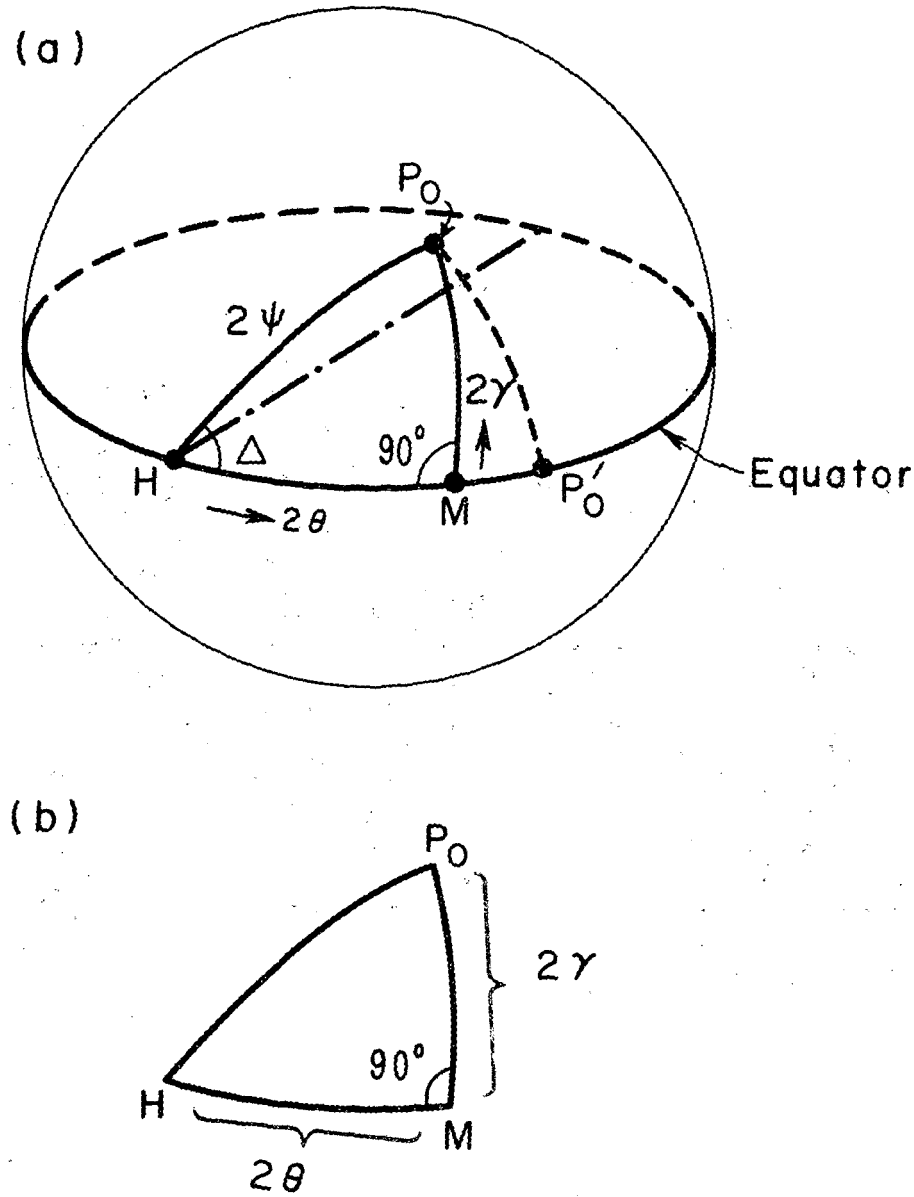

MUB-8169

Fig. 9

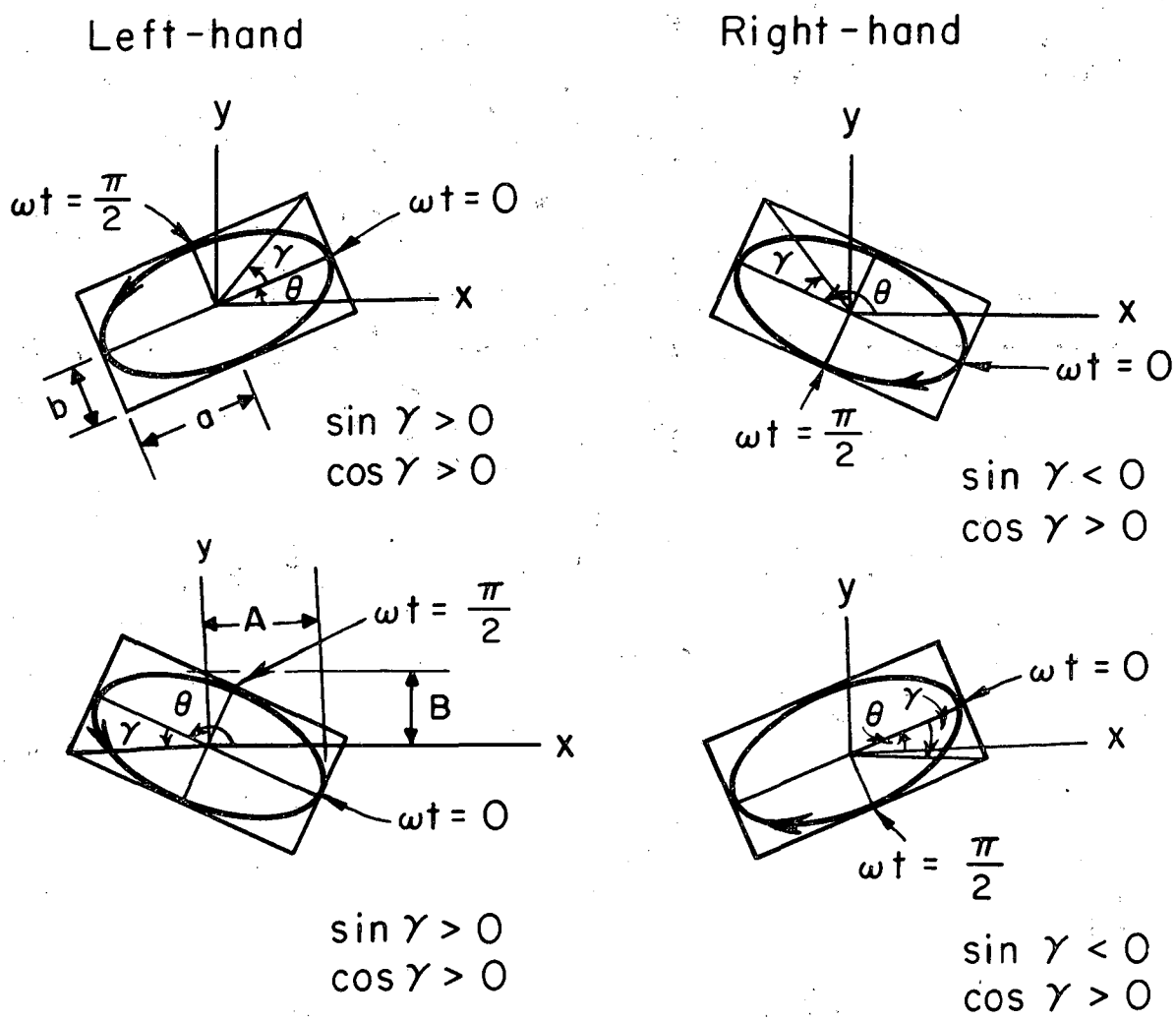

MUB-8170

Fig. 10

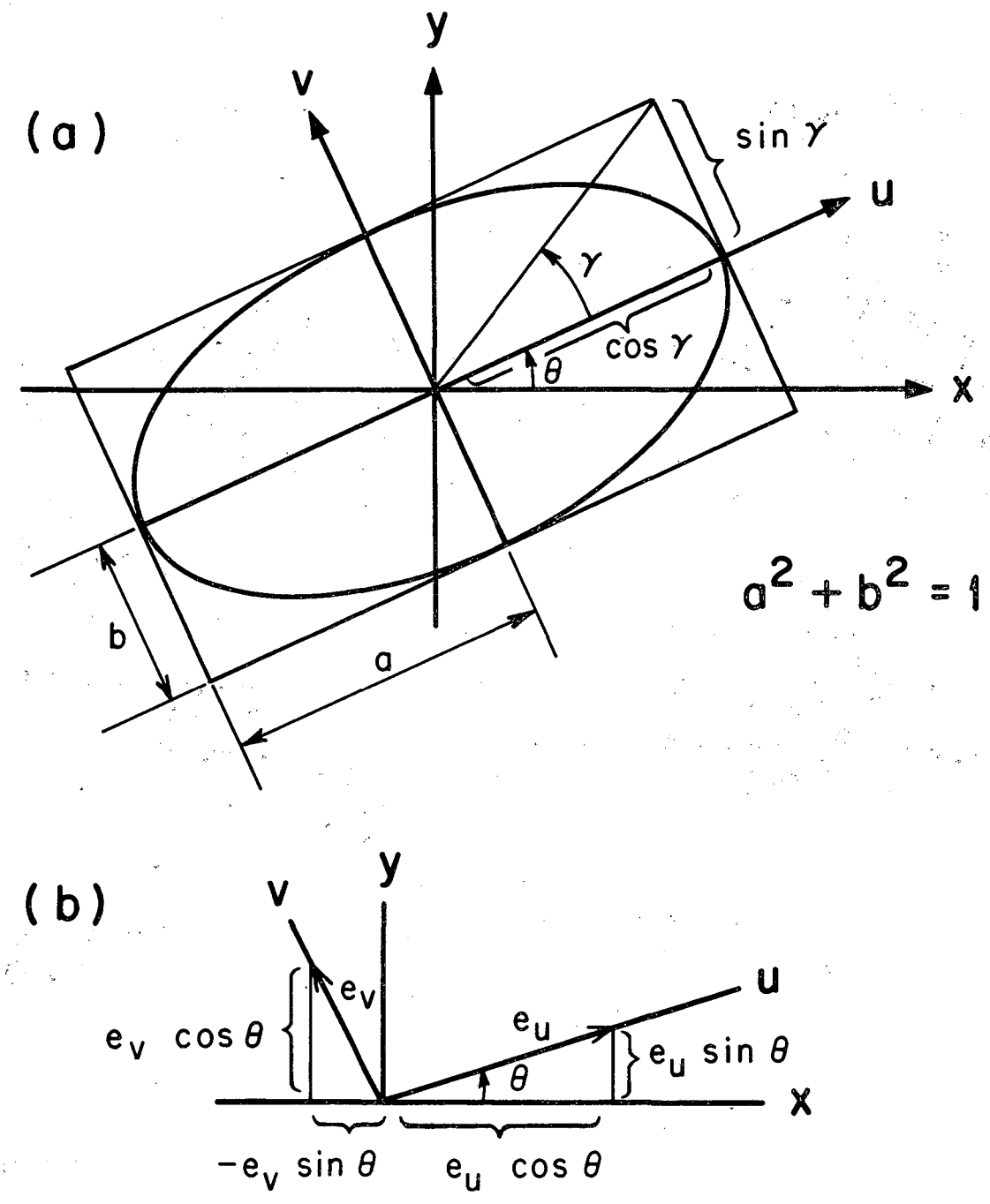

MUB-8159

Fig. 11

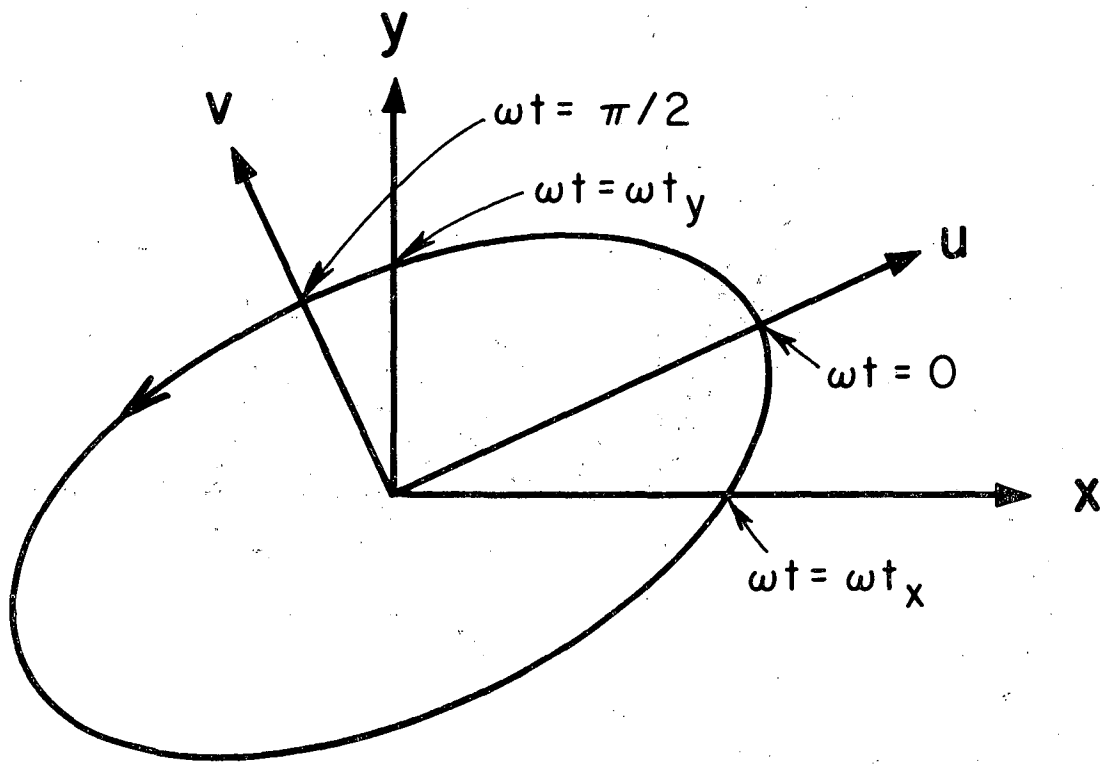

MUB-8160

Fig. 12

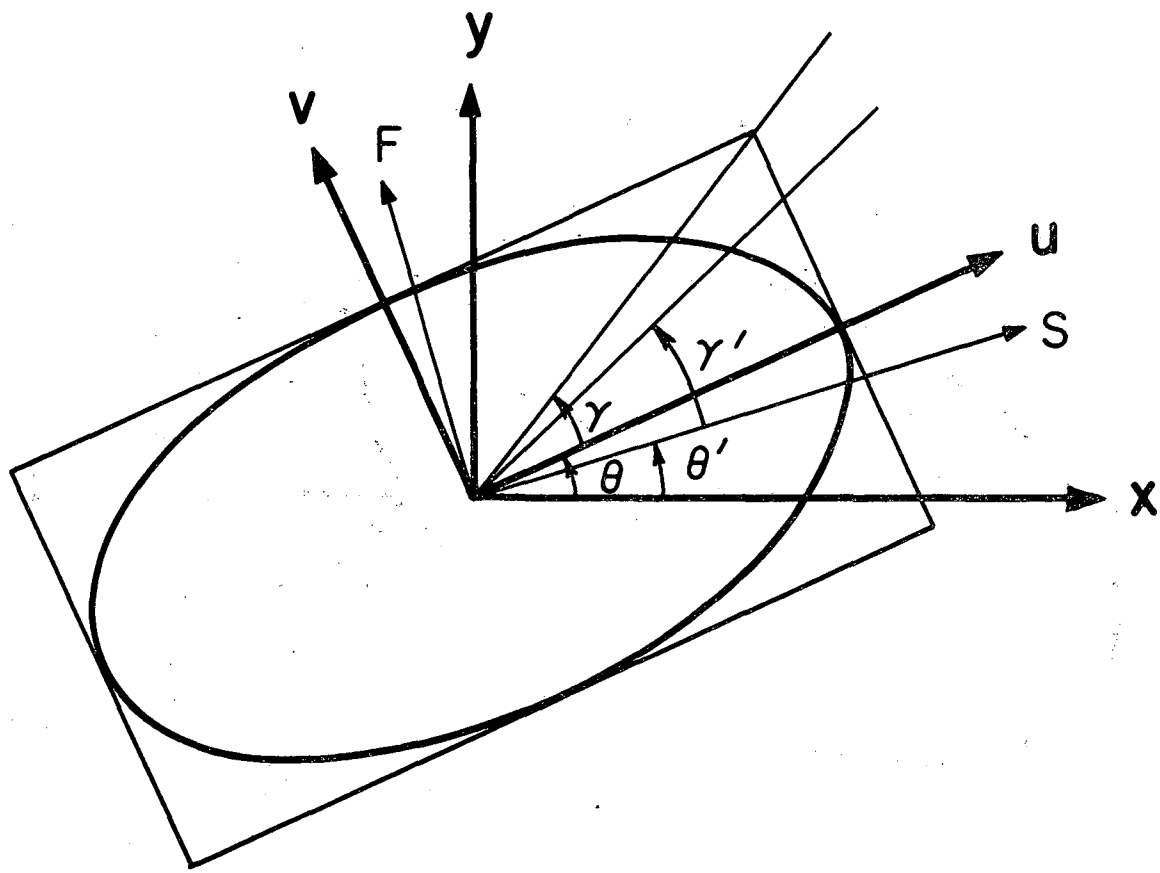

MUB-8161

Fig. 13

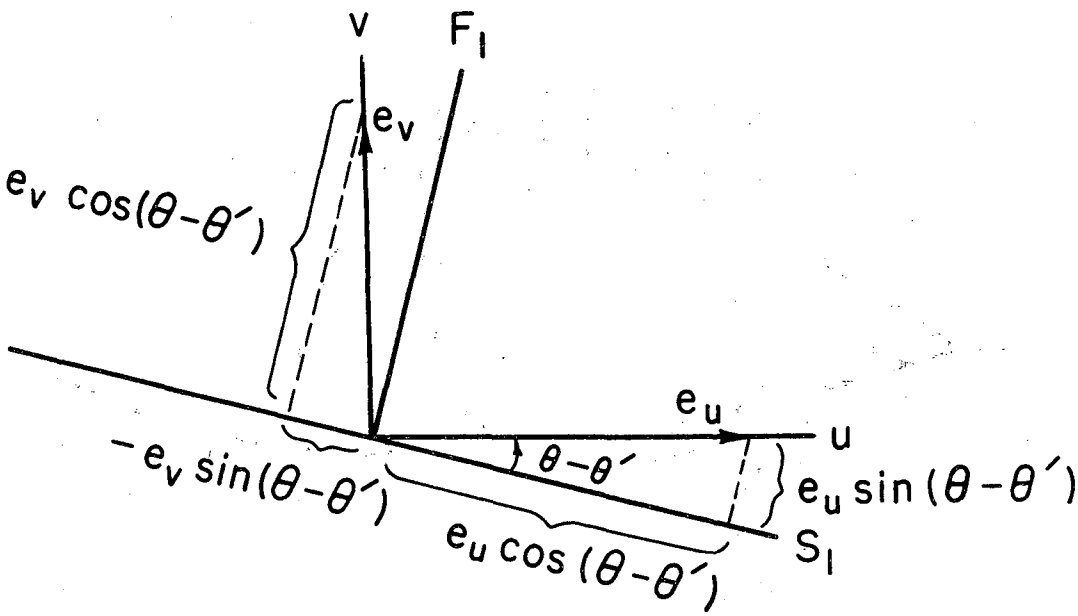

MUB-8187

Fig. 14

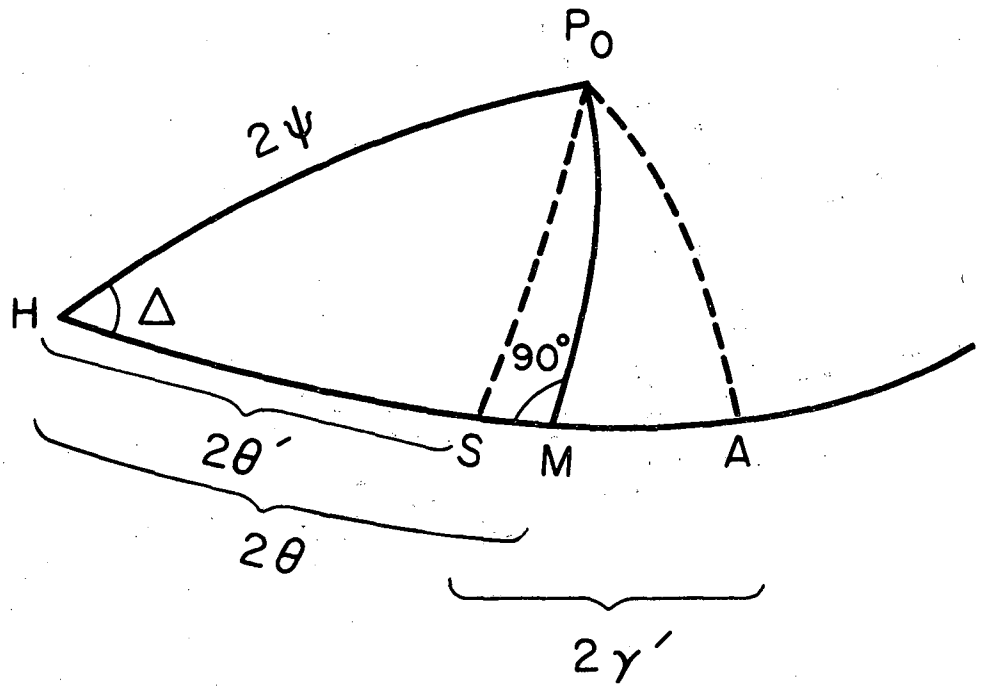

MUB-8174

Fig. 15

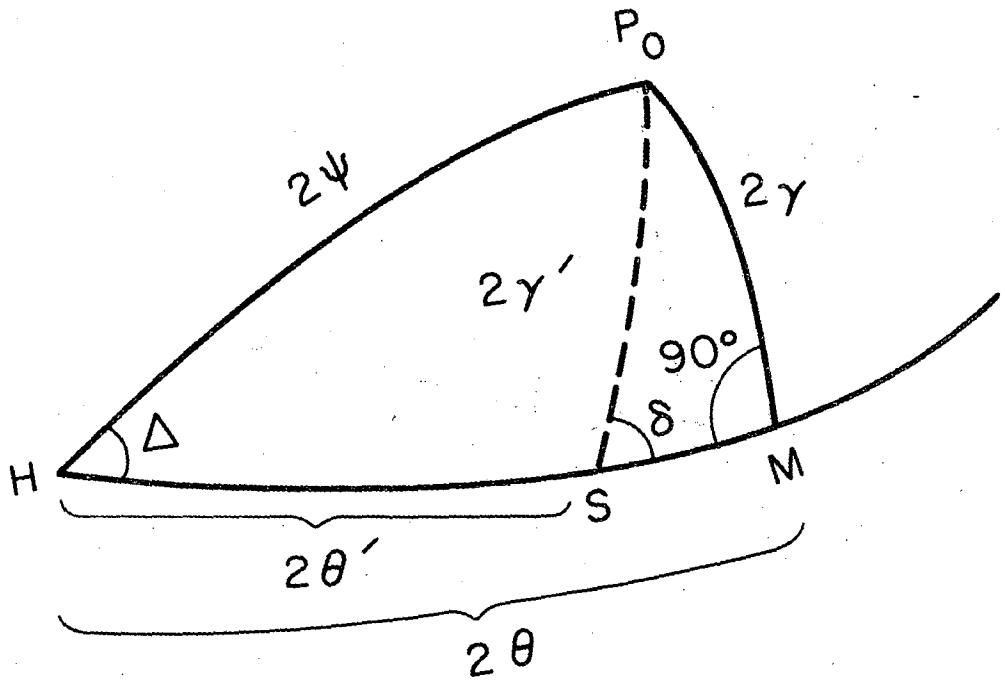

MUB-8175

Fig. 16

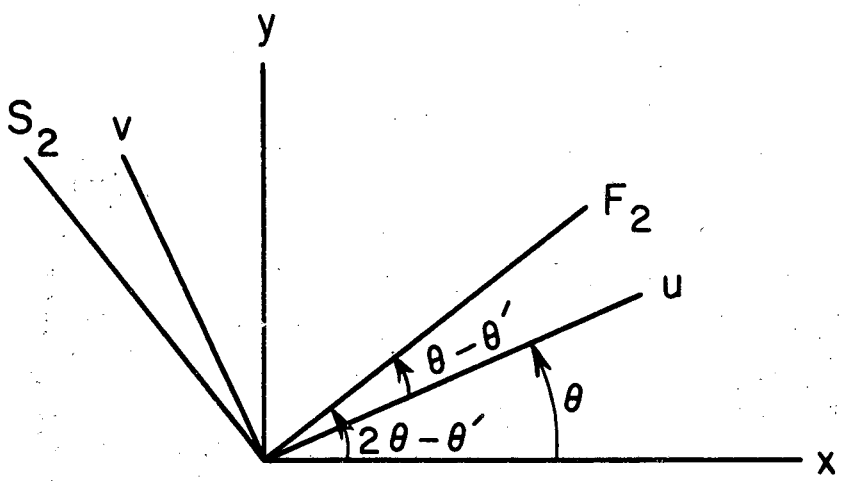

MUB-8176

Fig. 17

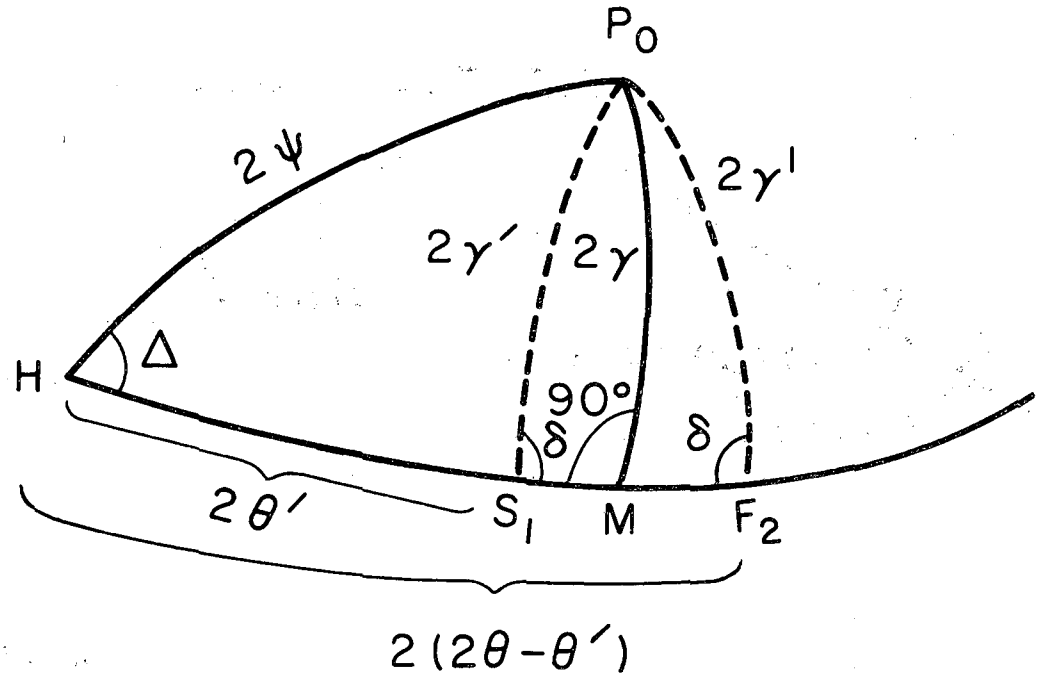

MUB-8177

Fig. 18

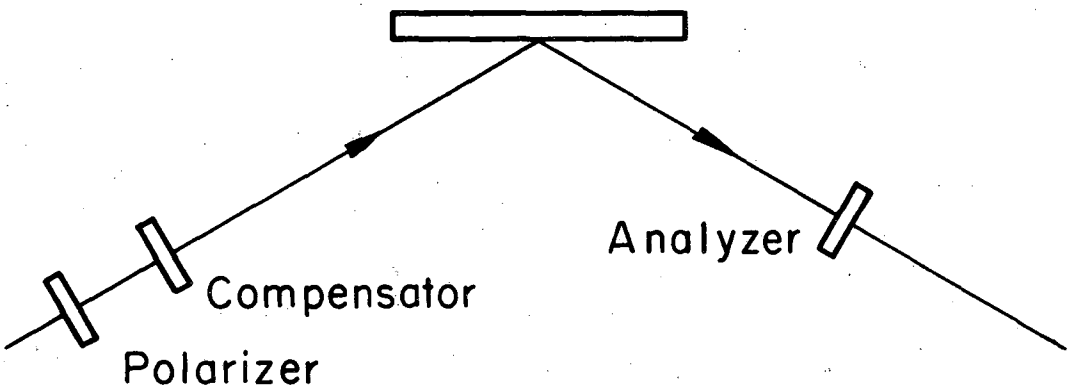

MUB-8178

Fig. 19

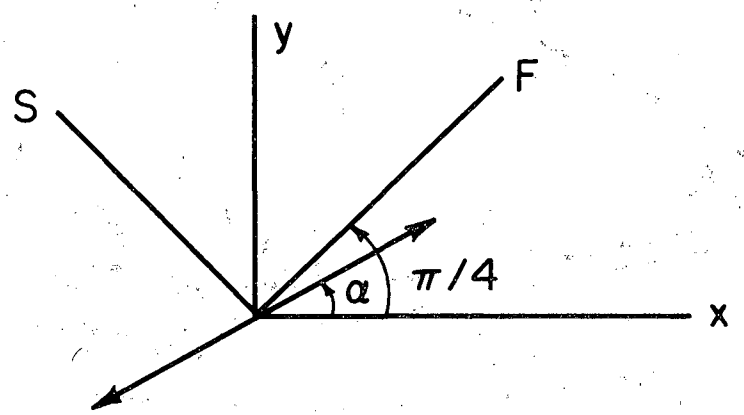

MUB-8179

Fig. 20

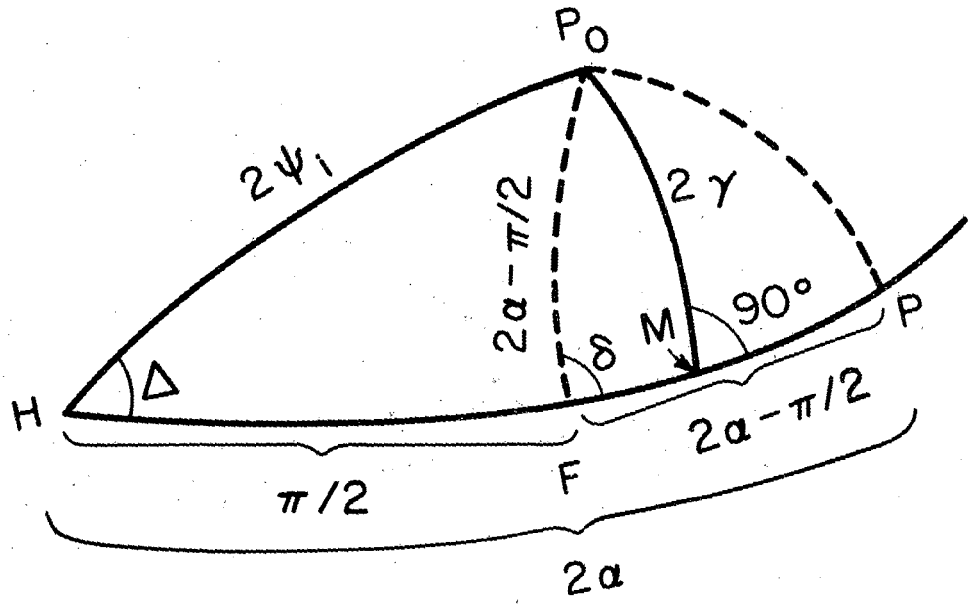

MUB-8180

Fig. 21

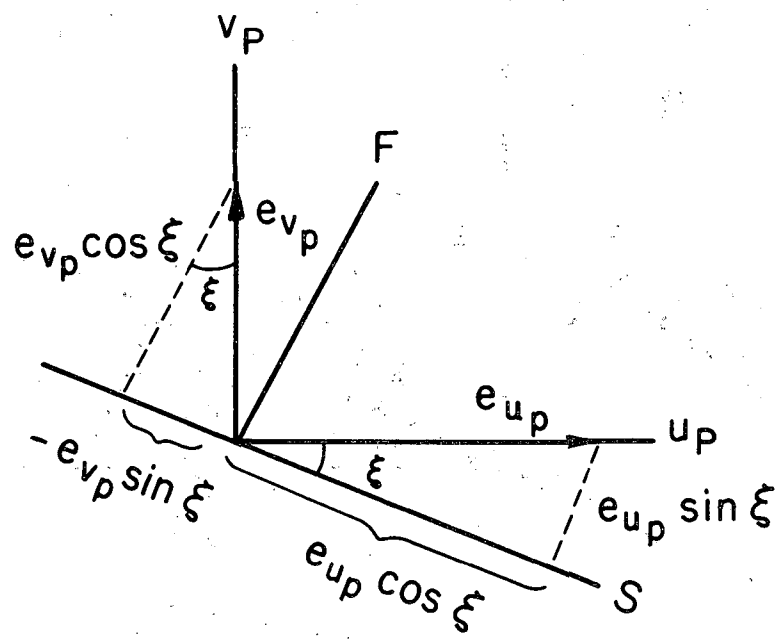

MUB-8181

Fig. 22

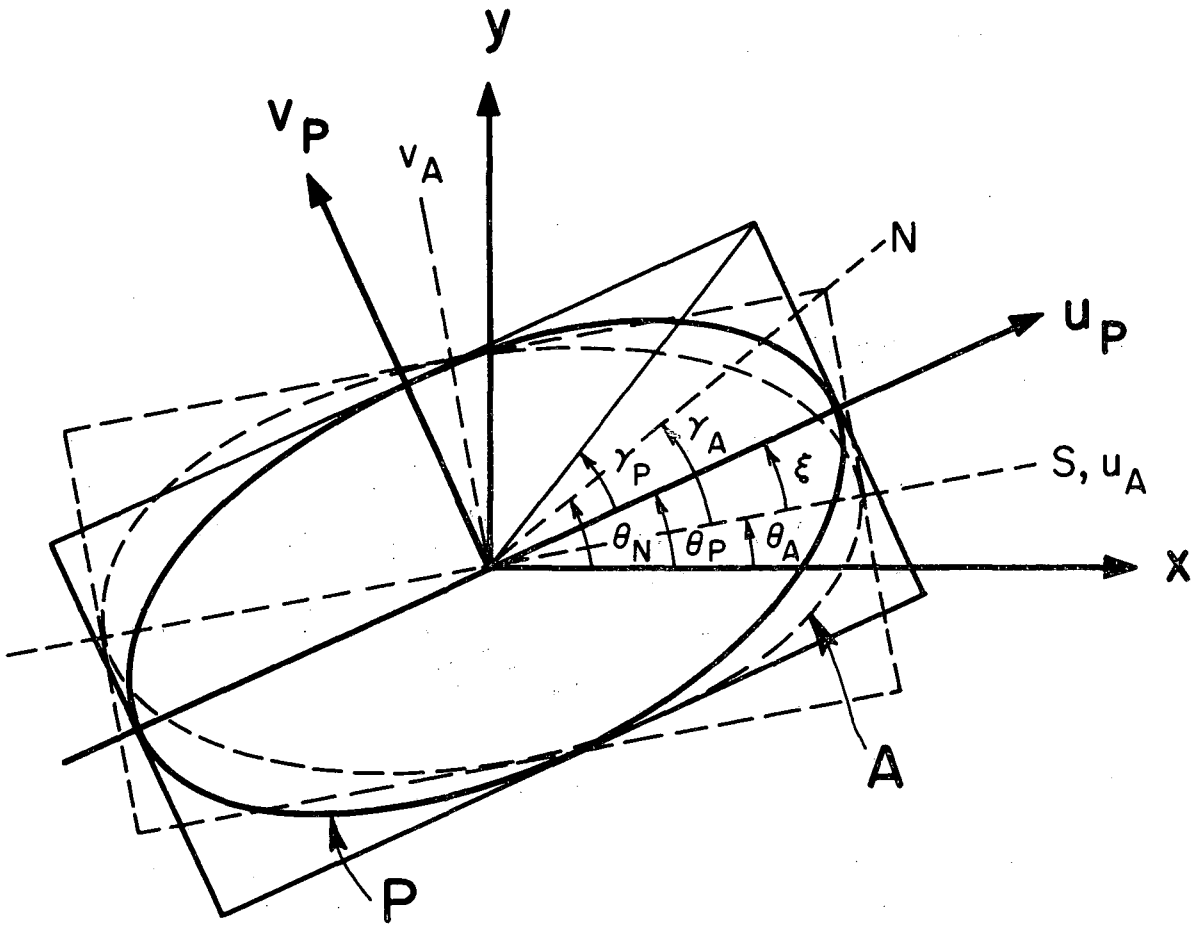

MUB-8162

Fig. 23

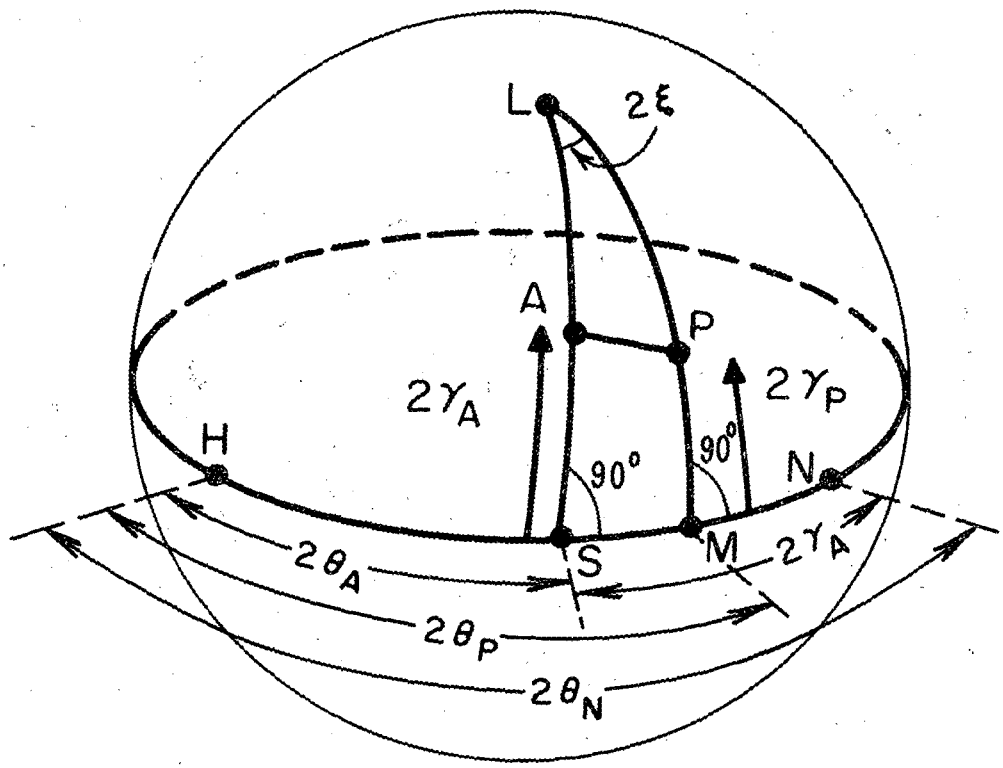

MUB-8171

Fig. 24

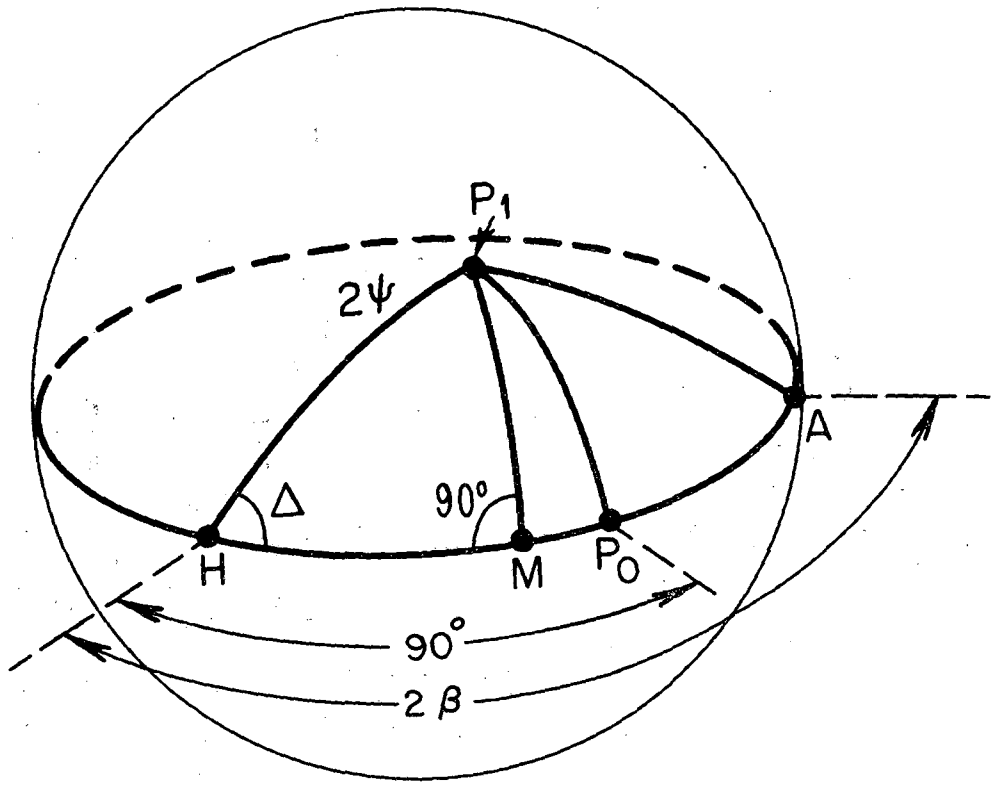

MUB-8172

Fig. 25

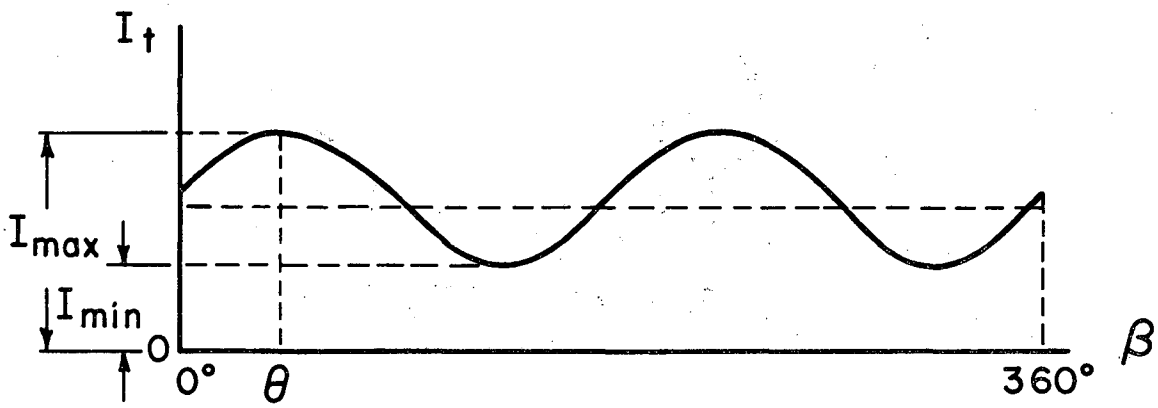

MUB-8182

Fig. 26

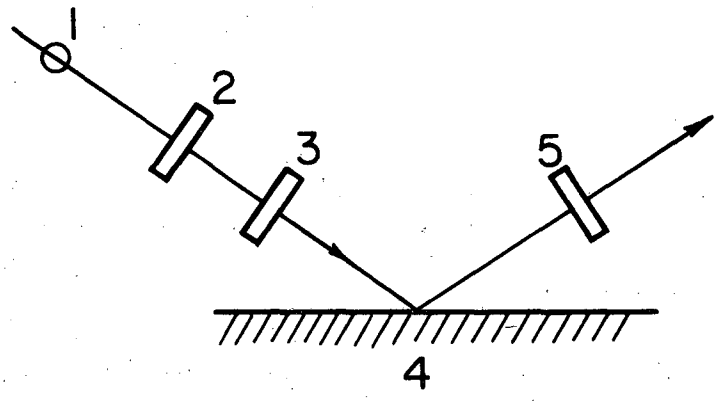

MUB-8183

Fig. 27

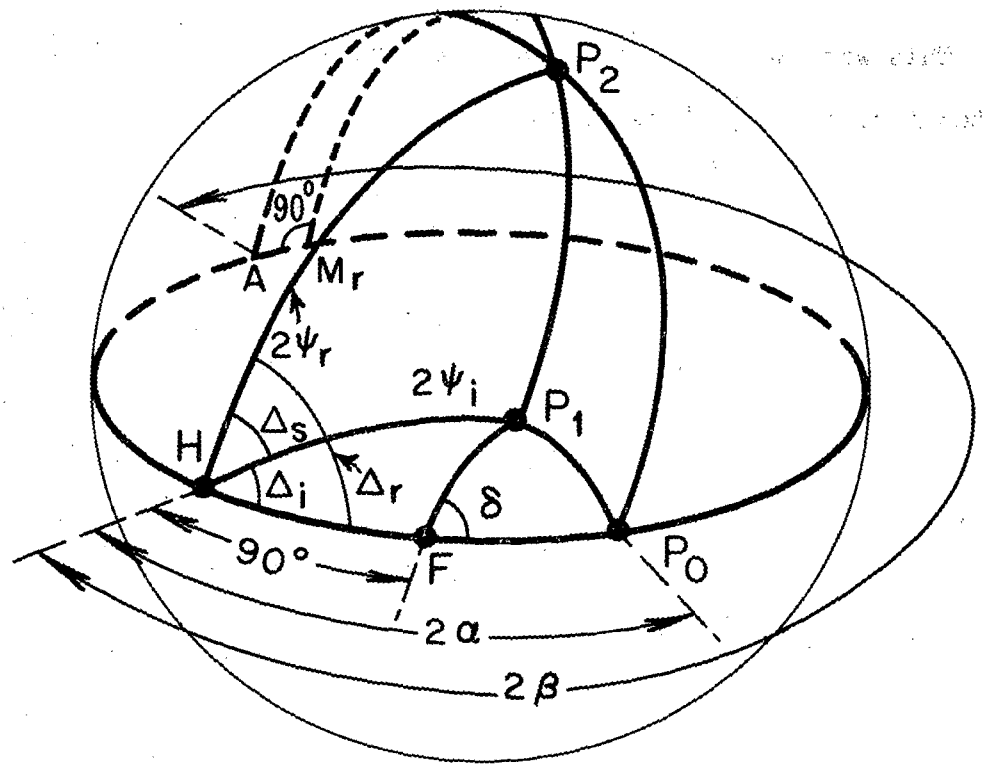

MUB-8173

Fig. 28

ACKNOWLEDGEMENTS

This work was performed under the auspices of the United States Atomic Energy Commission.

REFERENCES

1. A. Vasicek, Optics of Thin Films , North Holland Publishing Co., p. 20 ff, (1960).
2. M. Françon, "Intérferences, Diffraction et Polarisation" in Encyclopedia of Physics, 24, p. 175 ff, Springer-Verlag, (1956).
3. B. Rossi, Optics, p. 269 ff, Addison Wesley (1959).
4. J. Becquerel, "Über das Vorhandensein...", Z.Physik 52, pp 342-355 (1928).
5. G.N. Ramachandran, and S. Ramaschan, "Crystal Optics", Encyclopedia of Physics, 25-1, p. 1 ff, Springer, (1961).
6. R. W. Pohl, Einfuehrung in die Optik, p. 139, Springer, (1948).
7. C. Brink, Plane and Spherical Trigonometry, Vols. I and II, Appleton Century, (1942).
8. A.K.N. Reddy and J. O'M. Bockris, Ellipsometry in the Measurement of Surfaces and Thin Films, U.S. Dept. of Commerce, National Bureau of Standards, Miscellaneous Publication, 256, (1964).
9. A.C. Hall, "Inexact Sénarmont Compensators", J. Opt. Soc. Amer., 53, 7, 801-3, (1963).
10. R.J. Archer, "Optical Constants of Germanium", Physical Review, 110, 354-8 (1958).
11. J.M.Stone, "Radiation and Optics", pp. 36-40, McGraw-Hill, (1963).

This report was prepared as an account of Government sponsored work. Neither the United States, nor the Commission, nor any person acting on behalf of the Commission:

A. Makes any warranty or representation, expressed or implied, with respect to the accuracy, completeness, or usefulness of the information contained in this report, or that the use of any information, apparatus, method, or process disclosed in this report may not infringe privately owned rights; or

B. Assumes any liabilities with respect to the use of, or for damages resulting from the use of any information, apparatus, method, or process disclosed in this report.

As used in the above, "person acting on behalf of the Commission" includes any employee or contractor of the Commission, or employee of such contractor, to the extent that such employee or contractor of the Commission, or employee of such contractor prepares, disseminates, or provides access to, any information pursuant to his employment or contract with the Commission, or his employment with such contractor.