UCRL-11819

University of California

Ernest O. Lawrence Radiation Laboratory

TWO-WEEK LOAN COPY

This is a Library Circulating Copy
which may be borrowed for two weeks.
For a personal retention copy, call
Tech. Info. Division, Ext. 5545

A 1-nsec-RISETIME AMPLIFIER WITH DIRECT COUPLING

Berkeley, California

DISCLAIMER

This document was prepared as an account of work sponsored by the United States Government. While this document is believed to contain correct information, neither the United States Government nor any agency thereof, nor the Regents of the University of California, nor any of their employees, makes any warranty, express or implied, or assumes any legal responsibility for the accuracy, completeness, or usefulness of any information, apparatus, product, or process disclosed, or represents that its use would not infringe privately owned rights. Reference herein to any specific commercial product, process, or service by its trade name, trademark, manufacturer, or otherwise, does not necessarily constitute or imply its endorsement, recommendation, or favoring by the United States Government or any agency thereof, or the Regents of the University of California. The views and opinions of authors expressed herein do not necessarily state or reflect those of the United States Government or any agency thereof or the Regents of the University of California.

Nuclear Instr. Methods

UCRL-11819

UNIVERSITY OF CALIFORNIA

Lawrence Radiation Laboratory
Berkeley, California

AEC Contract No. W-7405-eng-48

A 1-nsec-RISETIME AMPLIFIER WITH DIRECT COUPLING

Horace G. Jackson

November 25, 1964

A 1-nsec-RISETIME AMPLIFIER WITH DIRECT COUPLING*

Horace G. Jackson

Lawrence Radiation Laboratory
University of California
Berkeley, California

November 25, 1964

ABSTRACT

A dc coupled amplifier is described which has a gain of 10 and a risetime of 1 nsec.

INTRODUCTION

In many counter experiments, especially with Čerenkov radiators, one needs an amplifier with a fast risetime (time between the 10 and 90% points of the pulse's leading edge) to bring the amplitude of the photomultiplier output pulses to a level sufficient to trigger a discriminator or coincidence circuit. With very high counting rates, the baseline shift must be minimized. Also in many present-day experiments, in which only one event of many is of interest, the amplifier must not introduce dead time due to pulse stretching, or generate multiple pulses at the output when overloaded. These considerations led to the design of a direct-coupled amplifier with the following specifications:

Gain	10
Risetime	1 nsec
Input impedance	50 ohms
Input polarity	Negative
Output polarity	Negative
Maximum output amplitude	1 V in 50 ohms
Delay, input to output	3 nsec
Equivalent noise level at input	50 μV rms
Thermal drift of output level	1 mV/°C

CIRCUIT DESCRIPTION

The recent development of transistors with gain-bandwidths greater than 1 GHz has led to the design of simple amplifiers with fast risetimes.[1] The 2N2857 used in this design has a minimum f_T of 1 GHz at $I_e = 5$ mA and $V_c = 6$ V. The circuit schematic diagram is shown in Fig. 1.

In the quiescent condition, Q1 is conducting about 5 mA and has a collector-to-emitter voltage of 3 V. Transistor Q2 is conducting approximately 2 mA and has 6 V across it. With negative input signals the current in Q1 decreases, and that in Q2 increases. The zener diodes were especially chosen so that CR3 has a breakdown voltage of 6.2 V, a value at which zener diodes exhibit a low impedance. The 1N959B (CR2) is a compromise between maintaining low zener impedance and having sufficient collector voltage on Q1. The 1N753A (CR3) is quiescently conducting 20 mA, which decreases as the current in Q2 increases. With zero current in CR3, its impedance is very large, thereby substantially reducing the gain of Q2. In this way the amplifier output current is limited to about 20 mA or 1 V into a 50-ohm load. In practice, the saturated output is about 1.5 V.

Without the diode CR1, the amplifier output baseline would have a large positive temperature coefficient due primarily to the temperature dependance of the base-emitter junction of Q1. Inclusion of CR1 is an attempt to perform some temperature compensation. Its effect is to hold the output dc level change with temperature to less than 1 mV/°C. Typically, over the temperature range 25 to 75°C, the output level changes less than 25 mV. The choice of a diode for CR1 is a little limited. A low forward impedance is required along with a low-diffusion capacity. The potentiometer (R6) is used to set the output level to 0 V.

The trimmer capacitor (C3) provides high-frequency compensation. With the trimmer adjusted for about 10% overshoot on the output pulse, the observed risetime of the amplifier is about 1.3 nsec. However, the pulse generator and oscilloscope have a combined risetime of about 0.8 nsec. The risetime of the amplifier alone then is about 1 nsec.

The closed-loop gain of the amplifier as determined by the feedback resistor (R8) and the series combination of R3, R4, and the dynamic resistance of CR1, is typically about 11. The open-loop gain is about 66.

PERFORMANCE

A Hewlett-Packard 215A pulse generator and a Tektronix 661 sampling oscilloscope were used to obtain the performance characteristics of the amplifier. The rise and fall time of the amplifier output are shown in Fig. 2. Figure 3 shows the amplifier output as the input voltage is changed from 10 mV to 100 mV, then to 1.0 V. The overshoot on the saturated output pulse is due to discharge of the capacity of the zener diode CR3. A plot of the rise and fall times with output amplitude is shown in Fig. 4. The rise and fall times are both about 1 nsec up to an output amplitude of 1.0 V. A gain linearity curve is shown in Fig. 5. At the 1.0-V output amplitude, departure from linearity is less than 10%.

The noise level was measured with a Boonton Model-91B rf voltmeter, which has a bandwidth of 50 kc to 500 Mc. The equivalent noise level at the input was typically about 40 μV.

ACKNOWLEDGMENT

An important part of high-frequency circuits is the layout. It is therefore a pleasure to acknowledge the work of Tom Shimizu who made the printed-circuit layout. A photograph of the layout is shown in Fig. 6.

FOOTNOTES AND REFERENCES

*This work was done under the auspices of the U. S. Atomic Energy Commission.

1. M. A. Schaffer, Nucl. Instr. Methods 27, 172 (1964).

FIGURE LEGENDS

Fig. 1. Schematic of the amplifier.

Fig. 4. Rise and fall time vs output voltage.

Fig. 5. Gain linearity curve.

Fig. 6. Amplifier layout.

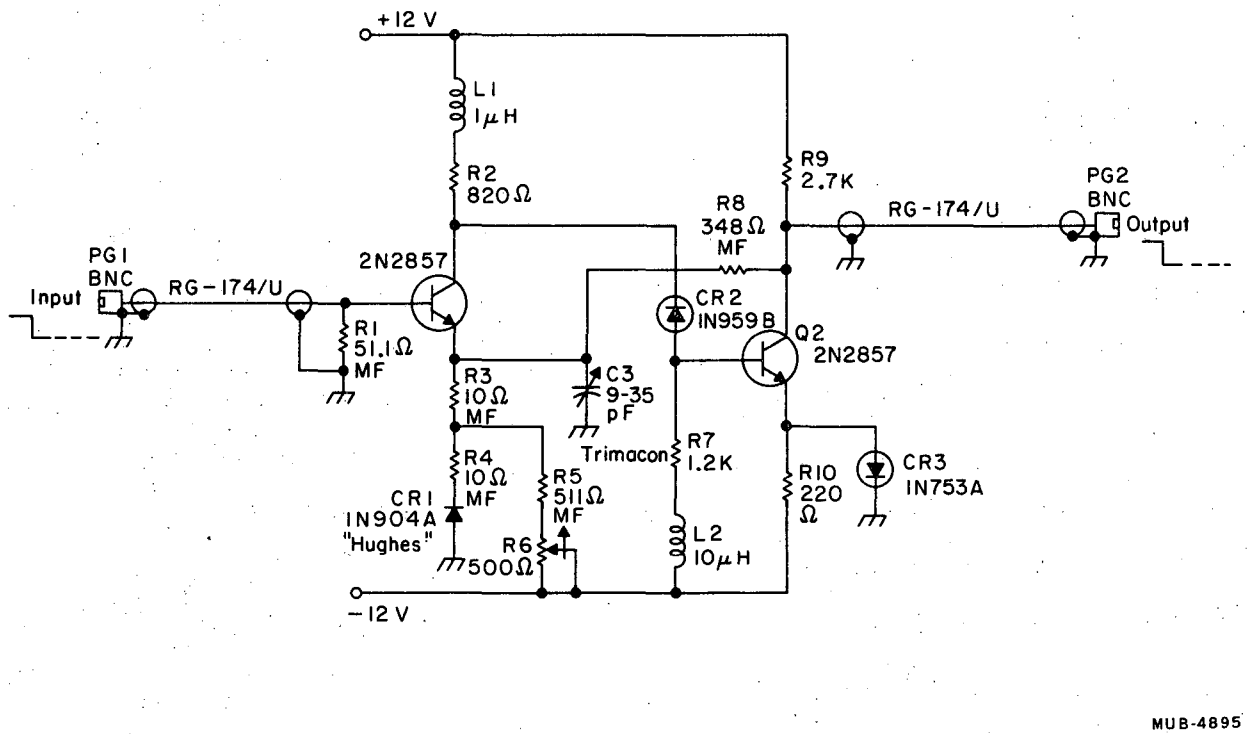

Fig. 1. Schematic of the amplifier.

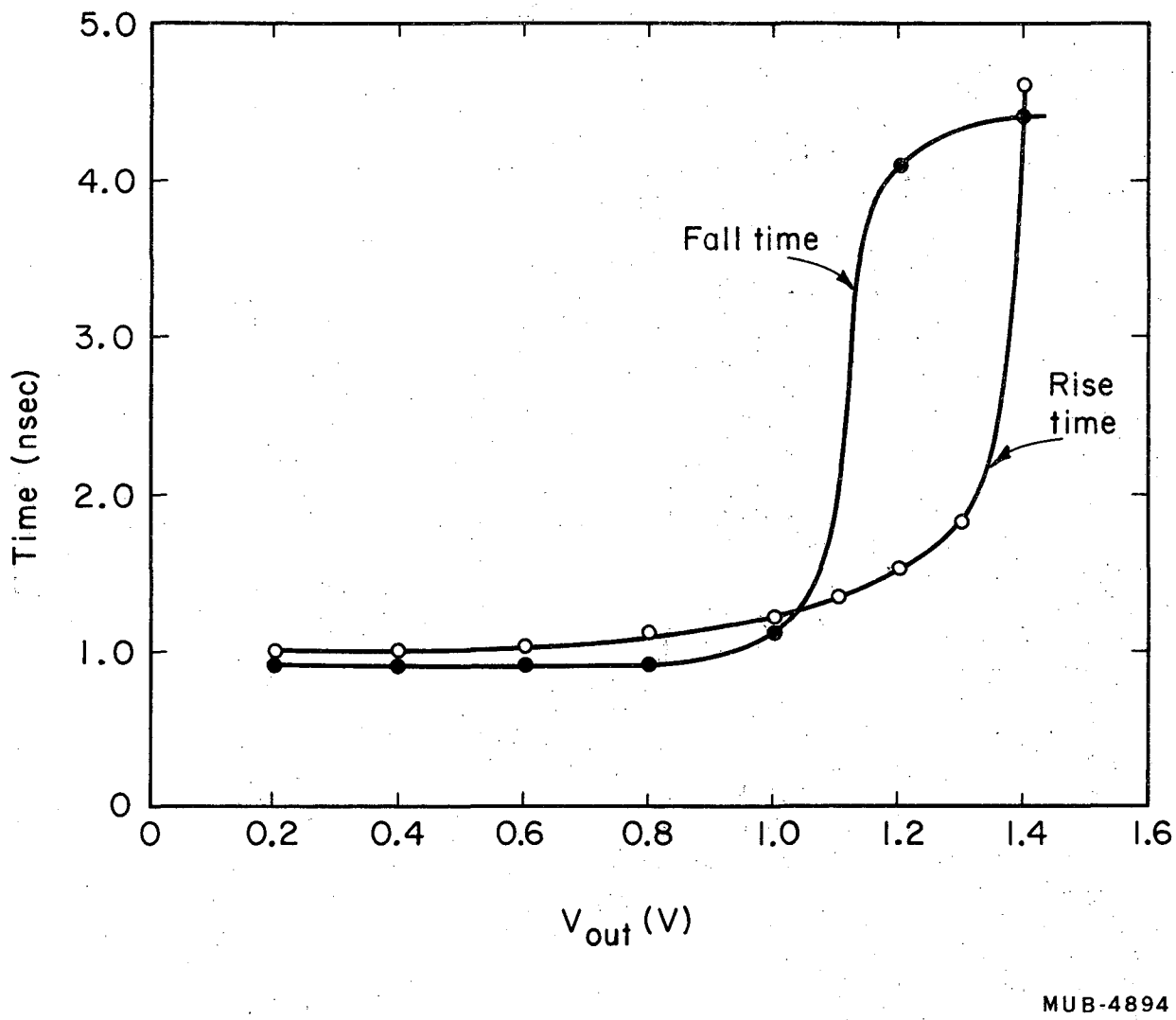

Fig. 4. Rise and fall time vs output voltage.

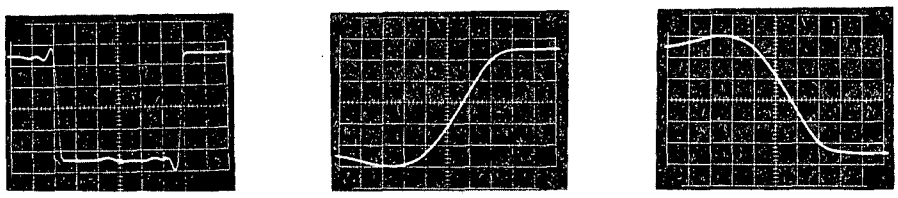

(a) (b) (c)

Fig. 2. Rise and fall time of the amplifier output.
(a) Output pulse - horizontal sweep = 5 nsec/cm; vertical = 50 mV/cm.
(b) Rise time - horizontal sweep = 0.5 nsec/cm; vertical = 50 mV/cm.
(c) Fall time - horizontal sweep = 0.5 nsec/cm; vertical = 50 mV/cm.

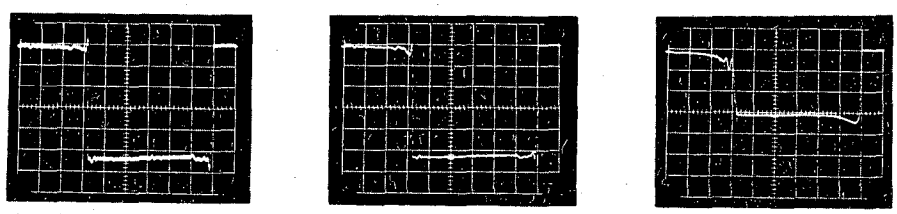

(a) (b) (c)

Fig. 3. Amplifier outputs
(a) Input voltage = 10 mV; horizontal sweep = 20 nsec/cm; vertical = 20 mV/cm.
(b) Input voltage = 100 mV; horizontal sweep = 20 nsec/cm; vertical = 200 mV/cm.
(c) Input voltage = 1.0 V; horizontal sweep = 20 nsec/cm; vertical = 500 mV/cm.

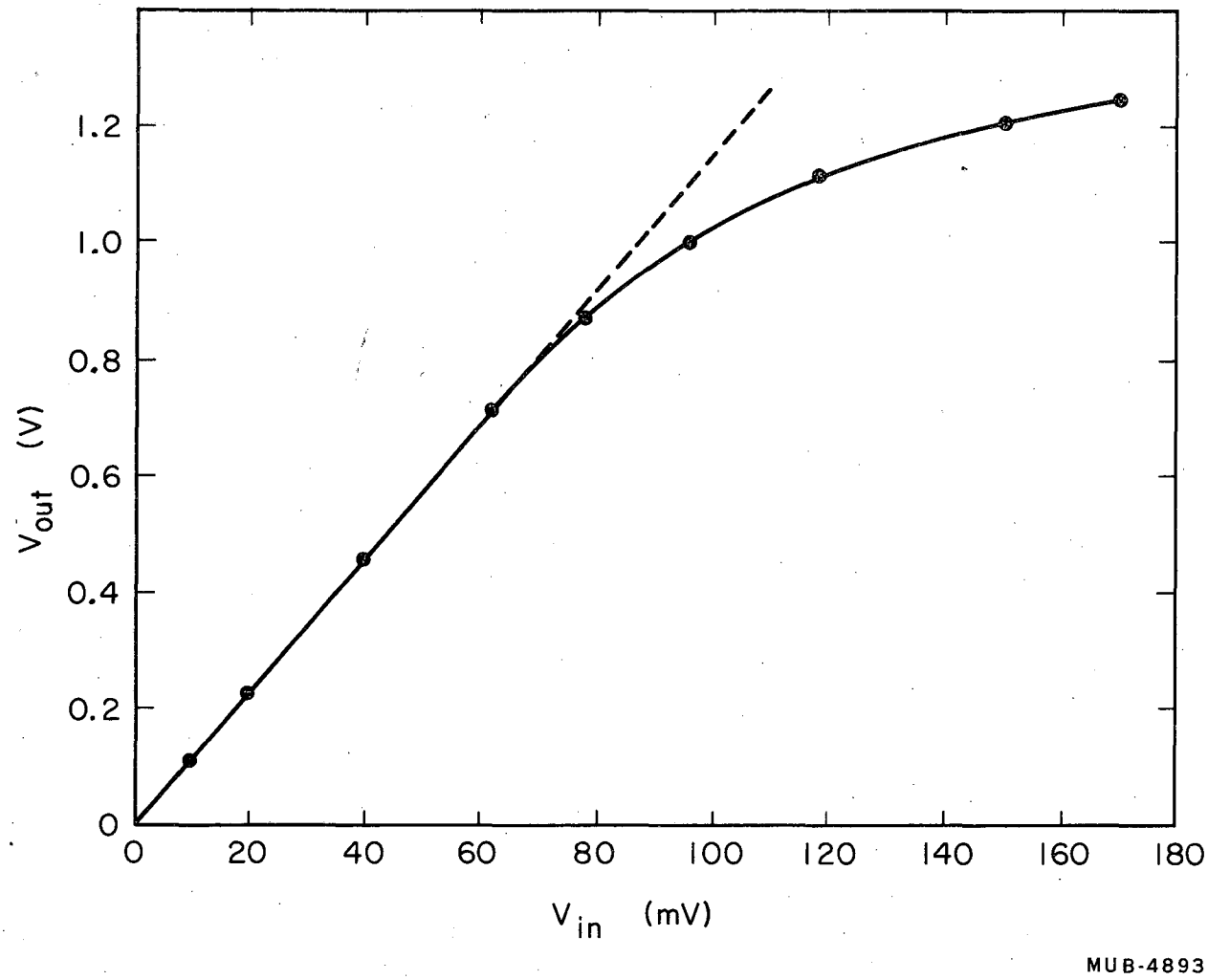

Fig. 5. Gain linearity curve.

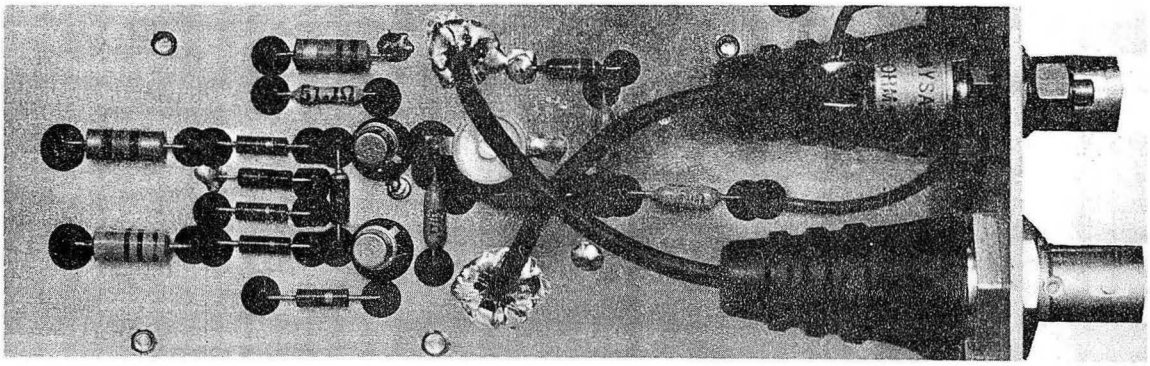

ZN-4591

Fig. 6. Amplifier layout.