UCRL-11927

University of California

Ernest O. Lawrence Radiation Laboratory

TWO-WEEK LOAN COPY

This is a Library Circulating Copy which may be borrowed for two weeks. For a personal retention copy, call Tech. Info. Division, Ext. 5545

MOLECULAR-BEAM STUDIES OF LANTHANUM MONOXIDE

Berkeley, California

DISCLAIMER

This document was prepared as an account of work sponsored by the United States Government. While this document is believed to contain correct information, neither the United States Government nor any agency thereof, nor the Regents of the University of California, nor any of their employees, makes any warranty, express or implied, or assumes any legal responsibility for the accuracy, completeness, or usefulness of any information, apparatus, product, or process disclosed, or represents that its use would not infringe privately owned rights. Reference herein to any specific commercial product, process, or service by its trade name, trademark, manufacturer, or otherwise, does not necessarily constitute or imply its endorsement, recommendation, or favoring by the United States Government or any agency thereof, or the Regents of the University of California. The views and opinions of authors expressed herein do not necessarily state or reflect those of the United States Government or any agency thereof or the Regents of the University of California.

UCRL-11927

UNIVERSITY OF CALIFORNIA

Lawrence Radiation Laboratory
Berkeley, California

Contract No. W-7405-eng-48

MOLECULAR-BEAM STUDIES OF LANTHANUM MONOXIDE

Robert Michael Walsh

(Ph.D. Thesis)

April 1965

MOLECULAR-BEAM STUDIES OF LANTHANUM MONOXIDE

Contents

Abstract v

I. Introduction 1

II. Molecular-Beam Apparatus 4

A. Pumping System 4

B. Furnace Assembly 4

C. Heating System Power Supply 7

D. Geometry and Optics of the System 7

III. Ground State of Lanthanum Monoxide 11

A. Experimental 12

B. Conclusion 16

IV. Application of Molecular-Beam to Lifetime Measurement 17

A. Light Source for Excitation of Lanthanum Monoxide 17

B. Light-Scattering in the Molecular-Beam Apparatus 23

C. Estimated Lifetime of the Lanthanum Monoxide Yellow-Green System 25

D. Conclusion 27

V. Summary of the Spectra of Lanthanum Monoxide and Its Homologues 29

A. Known Transitions and Energy Levels 29

B. Ground-State Multiplicity Problem 32

C. E and G Transitions of Lanthanum Monoxide 34

VI. Summary and Conclusions 35

Acknowledgements 36

References 37

Figure Captions 39

MOLECULAR-BEAM STUDIES OF LANTHANUM MONOXIDE

Robert Michael Walsh

Inorganic Materials Research Division, Lawrence Radiation Laboratory,
and Department of Chemistry,
University of California, Berkeley, California

April 1965

ABSTRACT

The ground electronic states of many high-temperature molecules are in question. A new method has been devised to establish the ground state of a high-temperature molecule by examination of the fluorescent spectrum of a molecular-beam. An apparatus to form a molecular beam has been constructed and a beam of lanthanum monoxide generated. The new method has been successfully applied to establish the ground state as that designated as $X^4\Sigma$ in earlier spectral studies.

The suitability of the LaO beam for use in the determination of the radiative lifetime by means of the phase-delay technique is discussed, together with a consideration of the light sources that might be used for such a measurement. The lifetime of the $B^2\Sigma$ state of LaO was estimated to be on the order of 10^{-7} sec.

The known electronic spectra of LaO, ScO, and YO are discussed and an extension of the molecular-beam fluorescence technique is proposed to settle a problem of the location of an excited state.

I. INTRODUCTION

In the investigations of the chemistry of high-temperature gaseous systems such as flames, plasmas, stars, etc., there is a need for reliable thermodynamic data for the chemical species of importance. Historically, the need for thermodynamic data has been satisfied by applying the the classical techniques of thermochemistry. At higher temperatures, however, many of the problems of thermodynamics can be better approached indirectly, by calculating thermodynamic functions from a knowledge of the energies and degeneracies of the allowed states of the molecule, which have been determined spectroscopically.

In the calculation of the partition function to determine thermodynamic functions, the allowed levels are weighted according to their degeneracies and the energy separation of the individual states from the ground state of the system. Thus the determination of the order of energy levels and their multiplicities, especially the identification and characterizing of the lowest energy level, is a significant problem of high-temperature thermodynamics.

For most high-temperature molecules, electronic transitions have been observed in some type of electric discharge. Such a discharge is capable of producing high excitation so it is impossible to say whether the lower level of the transition is the electronic ground state. At high temperatures there is the possibility that there is substantial population of low-lying electronic states, so the presence of the same band systems in absorption would not be an unambiguous confirmation of the ground state. In a molecular beam, however, there is little opportunity for the

re-excitation of higher states by collision; thus, if the lifetimes of the excited states are shorter than about 10^{-4} sec, there should be no substantial population of these higher energy states after the molecules have traveled a few centimeters. This upper limit on the lifetimes of the higher states would be reasonable for heavier molecules for which selection-rule prohibitions to intercombinations of states of differing multiplicities become much less rigid. This principle has been applied in the work reported here to the determination of the ground state of the molecule LaO. In the actual performance of the experiment, however, the fluorescence excited by the absorption is observed rather than observing the absorption directly. It is not only experimentally more convenient to work in this way, but it allows an opportunity to extend the method to the establishing of the location of states other than the ground state, as will be shown.

The molecular-beam apparatus constructed for a ground state determination experiment has other important applications, among them use in a radiative lifetime measurement. Lifetimes are easily related to the oscillator strengths of the transition studied. These oscillator strengths, in effect, allow a determination of the absolute concentration of a material from its measured spectral intensity. In high-temperature systems there is often no other way to determine concentrations of individual species than through the observation of spectral intensities; certainly this is true for stars for example. This is important thermodynamically, since some measure of the pressure is needed for the determination of free energies by the third-law technique.[1]

The molecular beam is a particularly suitable system in which to measure lifetimes. The problem of a cell that would contain high-

temperature molecules and still allow the passage of light into and out of the system is eliminated. Since collisions in the system are reduced, quenching of fluorescence and related processes that would tend to give an experimental lifetime other than that of significance in calculating an oscillator strength would be considerably reduced.[2] This suitability was another important consideration in the decision to construct a molecular-beam apparatus and the choice of the molecule that would be produced in the first experiments. In this work, light sources for use in an LaO lifetime experiment will be discussed, along with some anticipated experimental difficulties. The oscillator strength of LaO has been estimated from a consideration of the intensities of fluorescence observed in the molecular beam.

II. MOLECULAR-BEAM APPARATUS

All of the work reported herein was carried out by observing fluorescence in a molecular beam. The equipment has to meet several requirements in order to be suitable for the desired experiments. The pumping system used to evacuate the molecular-beam chamber had to be adequate to maintain a background pressure in the system that was low enough to avoid interference with the beam. As the beam was generated by heating a Knudsen cell, provision had to be made to heat this cell to temperatures up to 2000°C. A continuous control over the entire temperature range was desirable to avoid heating too fast. The arrangement of the system had to be such that the amount of light scattered into the spectrograph, both from the furnace and from the exciting lamp, could be reduced to a tolerable level.

A. Pumping System

The fore pump for the system, which serves also as a rough pump, is a Kinney KC-15. The diffusion pump is a 6-in. NRC model HS6-1500, type 162. The manifolding and cold trap, which make up the remaining part of the pumping system, was specially built by the NRC Equipment Corporation. Considerable difficulty was encountered with a preliminary apparatus that had inadequate pumping speed. The system described here, however, was adequate for all further work.

B. Furnace Assembly

The heat for generation of the molecular beam is supplied by a resistance-heated element. The arrangement of the Knudsen cell, the heating element, and the radiation shielding is shown in Fig. 1. The entire

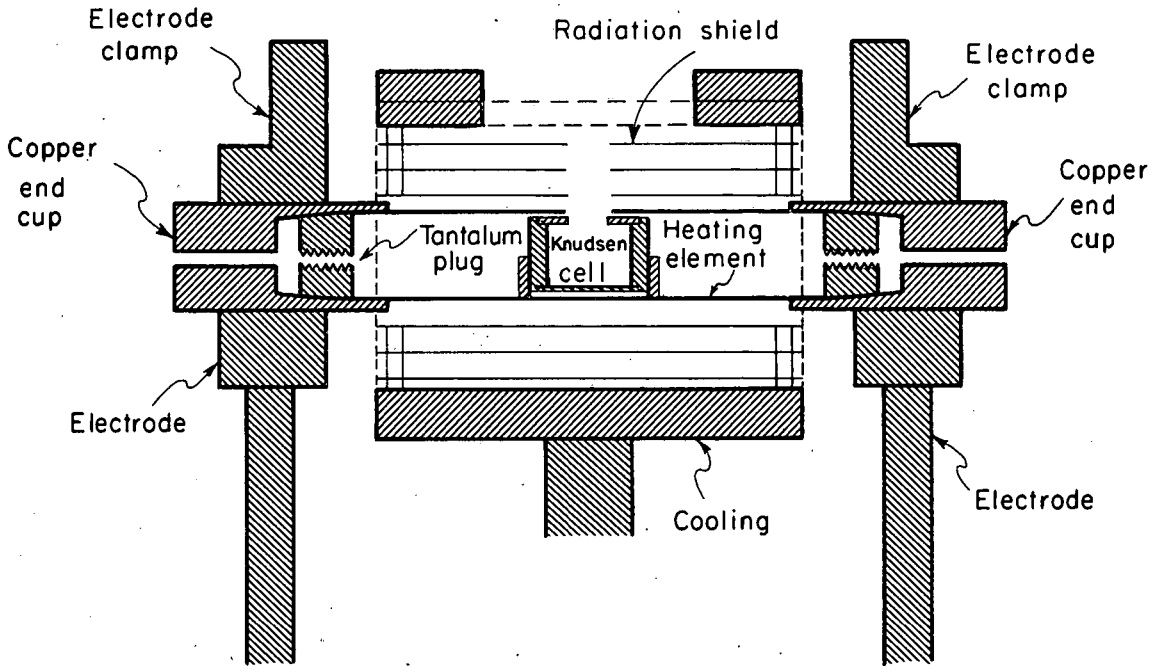

MUB-5747

Fig. 1

assembly can be looked on as a series of concentric cylinders. The innermost cylinder is the Knudsen cell itself. The cell is 2.5 cm long and 1.9 cm in diameter. A cell of about twice this length has also been used in those circumstances where it has been desirable to avoid opening the vacuum system to refill the cell. The end caps of the cell are machined with protruding points to help minimize contact of the cell with the heating element. Such contact would allow the cell to conduct a substantial amount of the heating current, and thus would reduce the heating in this region. One of these end caps is removable in order to fill the cell. The cell orifice is a slit 10 mm long and 1 mm wide.

The next cylinder out from the center is the heating element. This element is formed from a rectangular piece of 6-mil tantalum foil — with an opening above the cell orifice — which is held in its cylindrical shape by copper "cups" over the ends. The walls of the cups are tapered slightly and tantalum plugs of a matching taper are used to force the foil into good electrical contact with the cup walls. These plugs are threaded through the centers so that they can be pulled into place by inserting a screw through a hole in the base of the cup and tightening it. When the plug is forced into place the screw can be removed before the assembly is placed in the vacuum chamber for use. The cell and the heating element are held in place in the chamber by clamping the copper cups to the tops of the electrodes, which supply the heating power. The copper cups and the clamps are cooled by circulating water through the inside of the electrodes. A safety interlock would shut off the heating power supply in the event of a dangerous drop in the water flow rate.

The outermost component of the entire assembly is a copper cylinder about 1.3 cm thick and 10 cm in overall diameter, with an opening at the

top to allow the passage of the beam. This cylinder is cooled internally with circulating water and has the same safety interlock feature as the electrodes. This cooling jacket is held in place by a vertical post which passes through a Sealastic seal in the bottom of the vacuum chamber. The water inlet and outlet lines are contained within this post. Sealastic seals are also used for the electrode pass-throughs, so that the entire heating assembly can be adjusted through a range of heights within the chamber.

Between the heating element and the cooling jacket are a series of radiation shields. These shields are made of 6-mil tantalum foil that is spot welded into concentric cylinders. These cylinders are held apart with spacers, and the group of shields fit snugly into the cooling jacket so that there is no contact with the heating element. The size of the openings in the radiation shields above the cell orifice is used to regulate the solid angle of the molecular beam.

C. Heating System Power Supply

The resistance heating element of the furnace can be supplied with a voltage of up to about 10 V. When the usual 6-mil foil is used, about 1200 A is drawn at this voltage. Two No. 00 welding cables connect each of the system's electrodes to a 41.5:1 transformer, manufactured by Electrotransformer, rated at 20 kVA. The primary circuit of this transformer is connected through a powerstat and a Stabiline voltage regulator to a 208 V power outlet.

D. Geometry and Optics of the System

The general arrangement of the system is shown schematically in Fig. 2. A tungsten lamp operating at a brightness temperature of 2910°C, a

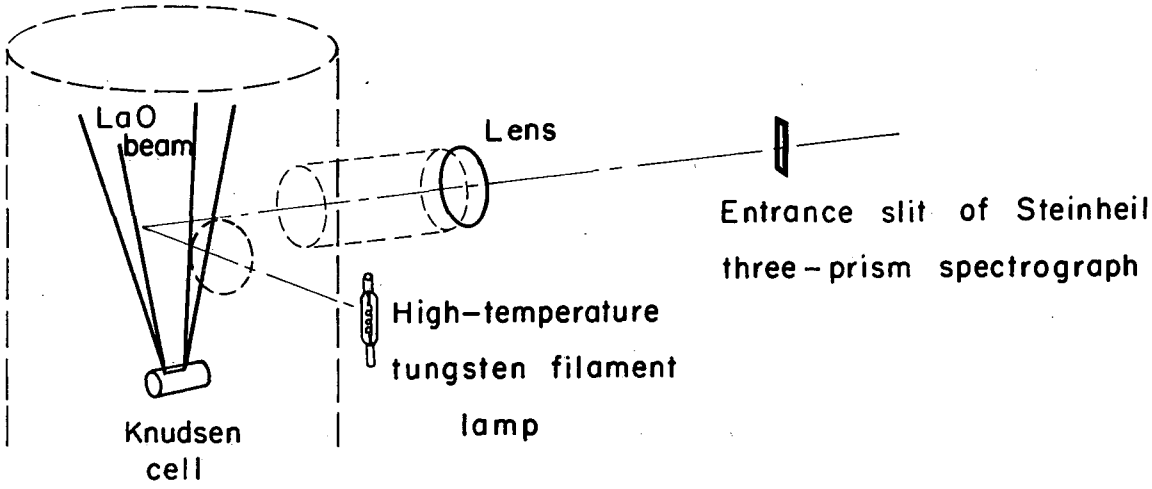

MUB-5748

Fig. 2

Sylvania type DWY quartz-iodine lamp* is used to excite the fluorescence. This fluorescence is observed at right angles to the exciting beam. A 15.9-cm focal-length lens is used to focus the light into a Steinheil three-prism spectrograph. Since the fluorescence is too dim to be seen by eye, the focusing is done by placing a small lamp in the vacuum chamber and focusing a point in the center of the beam onto the slit of the spectrograph.

The Steinheil spectrograph is a glass-prism instrument with an optical speed of f/10. The collimating and camera lenses are both 650 mm in focal length. The reciprocal dispersion in the green and yellow, the regions of principal interest in the work reported here, varied from approximately 20 to 35 Å mm^{-1}. The resolution with the slit widths and film used in most of this work was on the order of 2 to 4 Å. Osram mercury/cadmium and potassium lamps were used to calibrate the wavelength region of interest. The spectrograph has been adapted to take a Polaroid-Land 4x5 film holder No. 500, so Polaroid type 57 film can be used; this film has a speed of ASA 3000, so it is particularly useful for low light levels.

The brass, copper, and aluminum parts of the vacuum chamber and the cooling jacket are chemically or electrochemically blackened to reduce scattered light. A section of the stainless steel trap in the pumping system is exposed to the chamber. To cut down scattering from its highly reflective surface, the exposed side of the trap was painted with an Aquadag graphite suspension, and an infrared lamp was used to bake off the solvent.. While this does not eliminate scattering from this surface, it significantly reduces it.

---

* A discussion of the spectral distribution of the quartz-iodine type lamps is given by Studer and Van Beers.[3]

The vacuum chamber is a cylinder 30 cm in diameter and 45 cm high. The windows used for excitation and detection of fluorescence are 7.5 cm in diameter. Extension arms were made 15 cm long since it was desirable to collect light for the spectrograph from such a distance to minimize the amount of scattered light seen. These arms were made with supports for mirror mountings, for use in multiple-path absorption experiments. The removable mounts were similar in design to those of Conn and Eaton.[4] These mountings were not needed for any of the work reported here, but will be available for future work with this apparatus if needed; some types of experiments may be more suitably done in absorption.

One window-retaining flange was threaded so that a filter-holding device could be screwed onto it for experiments in which it was necessary to filter the exciting light. A cylinder in which a 2-in.-diameter photomultiplier tube can be placed can also be screwed onto this flange. The filter-holder is threaded on both sides so it can be used between the window and the photomultiplier without space for leakage of light from the outside.

III. GROUND STATE OF LANTHANUM MONOXIDE

The problem of the determination of ground states is of particular importance for diatomic molecules involving the transition metals. For compounds of this group no workable scheme has been established for predicting the order of the many energy levels that can be predicted from the molecular-orbital or the separated-atom approaches; these techniques are proving more useful in the case of diatomic molecules consisting of atoms whose valence electrons are all in s and p orbitals at lower energies. The establishment of the ground state for transition-metal diatomic molecules may be useful not only directly, but possibly may lead to the development of such a scheme for prediction.

A logical place to search for a model system for the development of the molecular-beam technique for ground state determination is among the compounds of the first column of transition metals, those involving one d orbital in the ground state of the atom. The homologous series of oxides ScO, YO, and LaO have all been investigated previously, so quite a bit is known of their spectra although their ground states have not been previously established. Thermodynamic calculations were made to determine the optimum reducing agent to convert the solid oxides of these metals of the type M_2O_3 to the corresponding monoxide gases. These calculations indicated that a sufficient pressure of LaO to form a molecular beam for these experiments could be obtained at a lower temperature than the other monoxides. The most suitable reducing agent was found to be lanthanum metal.

Features of the LaO spectrum have been known since the early part of the century. Band systems have been observed in the red, yellow-green, blue and ultra-violet. All these transitions involve the level suspected to be the ground state. A more detailed discussion of the electronic transitions and energy levels of this molecule will follow in a later section, in light of the results of the work reported here.

Meggers and Wheeler[5] gave a vibrational analysis of the red, yellow-green, and blue systems, designating them $A^2\Pi \rightarrow X^2\Sigma$, $B^2\Sigma \rightarrow X^2\Sigma$, and $C^2\Pi \rightarrow X^2\Sigma$, respectively. Their paper reviewed all of the earlier work on this molecule. More recently Akerlind[6] has given a rotational analysis of three bands each of the red and yellow-green systems, and has re-designated the lower state of these transitions as $X^4\Sigma$ in order to explain a constant splitting of the features of 0.5 cm^{-1}. This unusual assignment was a further reason for the determination of the ground state; the question of whether the newer assignment is correct will be discussed later.

The X state of LaO has generally been considered to be the ground state, hence its designation. The spectrum is easily excited in an arc, and some of the bands have been seen in absorption in S-type stars.[7-11] Neither of these observations, however, is a proof of the ground state, since in the arc high excitation is possible, and in the reversing layers of stars temperatures are high enough to populate low-lying energy levels other than the ground state; thus the molecular-beam technique was applied to settle this question.

A. Experimental

In order to observe the absorption of radiation by a molecular

beam of LaO directly, a multiple-reflection path and careful shielding of the spectrograph from extraneous light would be necessary. It was found to be experimentally more convenient to excite the beam with an intense light source and observe the fluorescence at right angles to the exciting light as the molecules return to the ground state. This not only avoided the problems associated with the alignment of mirrors for a multiple-path experiment, but also the loss of overall light intensity in such a system, which would make the intensity of scattered light a more serious limitation. An absorption experiment is also very sensitive to the correct length of exposure. Too short an exposure results in an overall low level of change on the film emulsion; too high a level would result in a washing out of the density difference owing to an absorption as the response of the film to the light becomes nonlinear. In photographing fluorescence, as long as the scattered light level is well below the fluorescence intensity, the exposures can be made quite long in order to bring out weak features. In this work exposure times up to 1 hr have been used.

The danger of using the fluorescence approach is that shorter-wavelength light might possibly populate a more highly excited state directly from the ground state of the molecule, with fluorescence appearing at a longer wavelength as the molecules fluoresce to an intermediate excited state. This can be avoided by filtering the exciting light with a short-wavelength cutoff filter that allows no light to be supplied to the molecules of higher energy than the transition being observed. Thus the transition observed in fluorescence must involve the same states as the absorption responsible for the excitation, making this experiment fully equivalent to the experimentally less

convenient multiple-path absorption. In some types of experiments the ability to populate a level that gives a transition observed at an intermediate energy is desirable.

The beam of LaO for these experiments was formed by heating a molybdenum Knudsen cell containing a mixture of La and La_2O_3 in the furnace assembly described above. The spectrograph was focused to observe the yellow-green system; the red band system was below the cut-off of the film's sensitivity. At about 1650°C the (0,0) and the (1,1) band heads of the system appeared in exposures of 30 minutes. The equilibrium pressure of LaO at this temperature is about 10^{-3} mm Hg. With the Knudsen cell used, the pressure in the beam is approximately 10^{-6} mm Hg. As the temperature was increased, more features began to appear.

The sample spectrum shown in Fig. 3 (a) was taken at 1935°C, with an exposure time of 15 min. This corresponds to an equilibrium pressure of about 1 mm Hg, and thus a beam pressure of about 10^{-3} mm Hg. In this photograph the (1,0), (2,1), (3,2), (0,0), (1,1), (2,2), (3,3), (4,4), (0,1), (1,2), and (2,3) bands are visible, and possibly others. Also visible are several atomic lines that are all due to transitions involving the ground state of elemental lanthanum. Figure 3 (b) shows a comparison spectrum used to establish the fluorescence as the desired yellow-green system of LaO. This spectrum was generated by running a dc carbon arc in air; the arc's lower electrode had been drilled out to form a shallow cup to contain La metal. Because of the greater intensity of the arc, it was possible to use a narrower slit on the spectrograph; thus in the comparison spectrum there is slightly better resolution of the features.

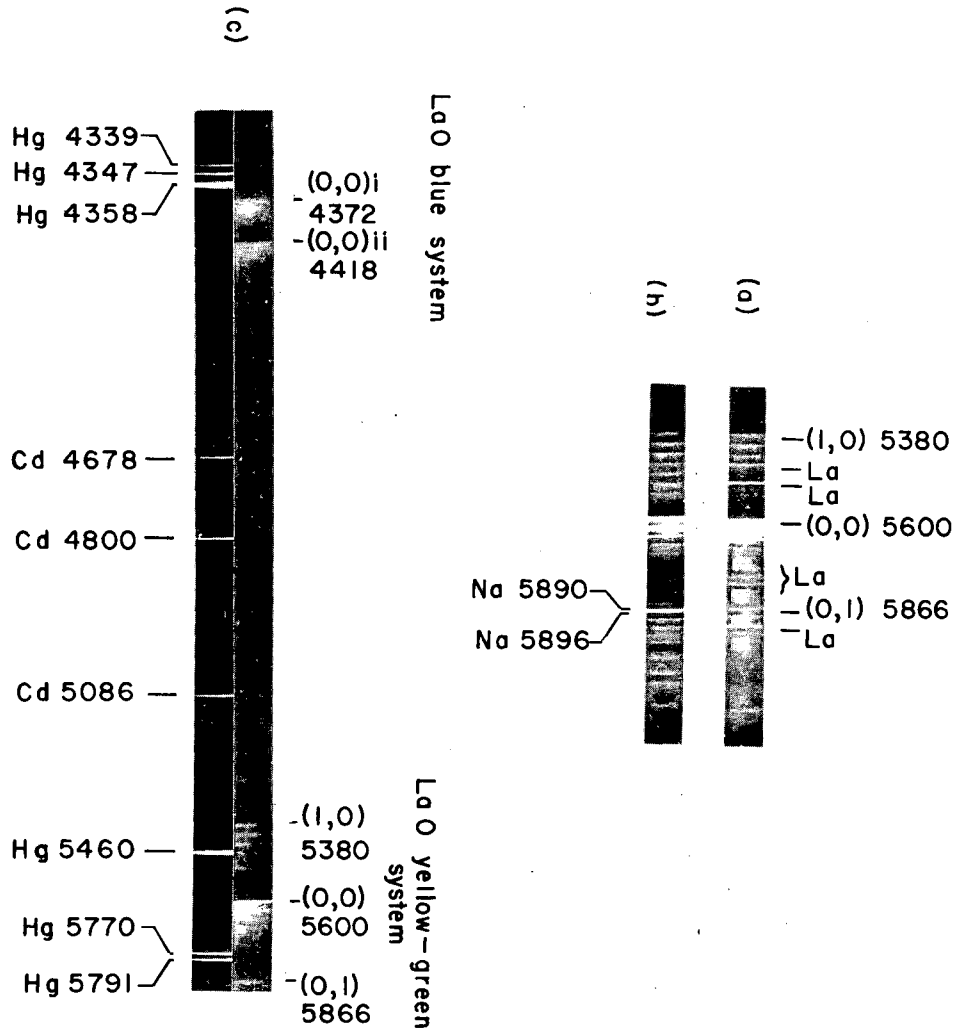
(c)
Hg 4339
Hg 4347
Hg 4358
Cd 4678
Cd 4800
Cd 5086
Hg 5460
Hg 5770
Hg 5791
(0,0)i
4372
(0,0)ii
4418
LaO blue system
(1,0)
5380
(0,0)
5600
(0,1)
5866
LaO yellow-green system
(b)
(a)
Na 5890
Na 5896
(1,0) 5380
La
La
(0,0) 5600
La
(0,1) 5866
La

ZN-4939

Fig. 3

When the exciting light beam was filtered with a Corning 3384 the fluorescence spectrum was found to be unchanged in intensity. This filter substantially reduces the light intensity below 5100 Å, thus establishing the fluorescence transition as equilvalent to the absorption transition that populated the higher state.

In further work it was possible to see the blue system of LaO in fluorescence. Due to some extent to the reduced film sensitivity, transmission of the optics, and exciting-lamp intensity at this wavelength, this fluorescence required longer exposure times and was less intense than the yellow-green system. Figure 3 (c), a 30-min exposure at about 1935°C, shows the blue system.

Light from the furnace and Knudsen cell becomes intense enough at about 2100°C to excite fluorescence in the yellow-green system without an external exciting lamp. Changing the effectiveness of the radiation shielding varied the intensity of fluorescence due to this light source, but as some light must always pass along the same path from the orifice of the Knudsen cell as the molecules in the beam, there will always be some excitation from this source. As long as the exciting lamp is kept appreciably brighter than the Knudsen cell, excitation from this source is not substantial enough to complicate the application of this method of ground-state determination.

B. Conclusion

These experiments establish the level designated $X^4\Sigma$ as the ground state of lanthanum monoxide. It seem likely that the analogous lower states of the corresponding systems of the scandium and yttrium monoxides are also the ground states.

IV. APPLICATION OF MOLECULAR-BEAM TO LIFETIME MEASUREMENT

One of the important reasons for the construction of the molecular-beam apparatus was to provide a system in which the lifetimes of high-temperature molecules could be measured. An apparatus for the determination of electronic lifetimes by the phase-shift technique has been under development in these laboratories for a number of years.[2,11-14] Since a molecular-beam of lanthanum monoxide was available in connection with the determination of the ground state, some experiments were undertaken to investigate some of the experimental difficulties that would arise in a LaO lifetime measurement. The questions considered are, a) would a sodium lamp be a suitable source for the excitation of fluorescence in a lifetime experiment, b) how significant a problem is light scattering in the apparatus, and what can be done about it, and c) can a rough value of the lifetime be estimated in order to determine which light modulating system should be used in a LaO lifetime experiment.

A. Light Source for Excitation of Lanthanum Monoxide

The red, yellow-green, and blue systems are each possibilities for a lifetime measurement. Because the yellow-green was the most accessible with the experimental arrangement used for the ground-state determination, it was used for preliminary studies of the suitability of the LaO beam for a lifetime measurement. The first problem to be considered is the choice of a light source for the excitation.

In previous measurements of lifetimes with the equipment in these laboratories, an atomic line source was used to excite the

molecules to fluorescence. In general, a lamp was chosen with an atomic line that overlapped a group of rotational lines in one band of the band system under investigation.* Filters were used to block out other atomic lines. The first approach to finding a light source was, thus, to find an appropriate atomic overlap. Such an overlap appeared likely to exist for one of the sodium D lines. In fact, before the molecular-beam apparatus was constructed the possibility of such an overlap made LaO one of the early choices as a high-temperature molecule suitable for a lifetime measurement. As it became apparent that LaO was also most suitable as a test molecule for the ground-state-determination technique, the possibility of such an overlap was a further inducement to generate a beam of this molecule.

The (1,2) head of the yellow-green system lies, by Jevons' measurements[16] at 5893.4Å. This is the first of a close double head. The sodium D lines lie at 5889.95 (D_2) and 5895.92 (D_1). The relation of these sodium lines to the LaO spectra can be seen in Fig. 3 (b), since an abundance of sodium was present in the carbon arc used to generate a comparison spectrum. In a head, the rotational lines are close together, so overlap by the atomic line is more likely. To look for such an overlap with LaO rotational lines, a sodium lamp was placed in the exciting-lamp position used for the tungsten lamp in the ground-state experiment. If a single rotational level of the v' = 1 vibrational level were excited, the fluorescence spectrum would be expected to

---

* Studies are underway to determine the variation of measured lifetime when the rotational and vibrational level excited is varied.[15]

consist of, following Akerlind's analysis[6] of the transition, a series of closely spaced quartets of rotational lines. Sets of these lines would appear in the regions where the (1,0), (1,1), (1,2), etc. bands are seen. The quartet of lines would be unresolved when observed with this system, that is, the Steinheil spectrograph with Polaroid type 57 film as described above. This is because lines in bands involving the v' v' = 1 vibrational state would be seen, as there is no selection rule for v; the relative intensities would be governed only by the Franck-Condon overlap of the v' = 1 wave functions with those of the various v'' levels. On the other hand, only those rotational transitions would be seen in each band that are allowed by the $\Delta J = 0$ and $\Delta K = \pm 1$ selection rules that are applicable in this case. Of course, if the exciting line were broad enough to populate more than one rotational level in the excited state, then more rotational lines would be seen in decay.

An Osram sodium lamp and a General Electric NA-1 sodium lamp were each used in an attempt to produce fluorescence. With beam temperatures at over 1900°C, using exposure times of up to 30 min, no spectrum was observed other than a strong overexposure in the region of the D lines. The intensity of the feature seen was unchanged when the furnace was cold, indicating that this was simply scattered exciting light. No features were seen in the regions of the other bands with v'' = 1; if fluorescence were present, however, it would be expected that decay via the (1,1) transition would be even stronger than the direct reradiation in the (1,2) band which was used for excitation. The conclusion is, then, that that the overlap of the D line with rotational structure of the yellow-green band system of LaO is either missing or very small, so it appears that the sodium lamp is not a feasible light

source for the lifetime measurement. However, there is a possibility that a more pressure-broadened lamp would have enough overlap.

Another possibility for a light source uses a different approach from that of previous experiments. With the current availability of interference filters, it seemed that a continuous light source used with an appropriate filter to excite a small region of the spectrum would be useful. Since, with filters made to order, one could selectively excite through a band with strong relative intensity, the efficiency of excitation could be maximized.

Several interference filters were purchased, chosen to overlap large regions of each of the three intense sequences of bands seen in the yellow-green system. The approach here is different from that used in the excitation of a few rotational lines with an atomic line: Instead of exciting only one, or a few, features with a very intense but narrow source, the use of these interference filters would excite many features with a broad, moderately intense source. The filters were chosen so that one of the set could be used for excitation, while another, which passes a different region of the spectrum, would filter the fluorescent light. This would assure that scattered excited light, and thus light with zero relative phase which would lower the measured lifetime, would not pass on to the photomultiplier, which is used as a detector. These filters could then be interchanged and used the other way around. All of the combinations of filters could be used, thus determining if the lifetime excited in these different way are the same. Although an atomic line has not been found that can be used for excitation, interference filters which are made to separate atomic lines are being acquired by this laboratory. Although these filters are rather

broad compared to the atomic lines used for previous experiments, they are narrow enough compared to the filters acquired for the LaO bands that they can be used for narrower excitation in order to compare the lifetime measured with the more selective population of upper levels with that obtained by using the broader filters.

The interference filters were delivered promptly enough for a preliminary look at the fluorescence excited when they are used to filter the incident light. It appears that they may transmit suitable intensity for the proposed lifetime measurement.

It may be well to consider the possibility of measuring a lifetime in either the red or blue systems. While no preliminary work has been done on these systems as in the case of the yellow-green system, this possibility should not be ignored. From the astrophysical viewpoint there is much to be said for a measurement in the red system. While LaO has been seen in stellar spectra,[7-11] only bands of the red system have been specifically identified. It is suspected that the yellow-green system is present in the same stars, but a group of Ca lines and strong bands of ZrO complicate the observed spectra in the region of the strongest bands of this system. The spectra are seen in these stars as absorptions from the continuum coming from deeper within the stars; since these stars are faint red stars there is not enough intensity at shorter wavelengths for the blue system to have been observed. Unfortunately, detector sensitivity in the red is a serious problem, so it may not be possible to measure the lifetime of this state directly. The answer to this problem would lie in the determination of the relative oscillator strengths of the transitions from the $A^2\Pi$ and $B^2\Sigma$ states in another experiment, simply by determining the

relative intensities, corrected for the sensitivity difference of the detector in the two regions. All of the suggestions regarding the use of interference filters given with regard to measurements in the yellow-green system are applicable to the red or blue systems. In addition, some atomic lines fall in regions where they may be of use for excitation in the more usual way.

In the blue system, there is a head at 4356.3Å, near the very intense mercury line at 4358.3Å. A weaker mercury line, 4347.5Å, lies slightly to the blue of a band head at 4348.2Å; this seems somewhat less useful. Unfortunately, however, neither of these bands appear to be very strong. In the fluorescence spectra from this state obtained in the molecular-beam work, these bands were not visible. The calcium 4425.4Å line falls between the (1,1) and (2,2) band heads of one subsystem of the transition. The cesium 4593.1Å line falls very near the (3,4) head of the other subsystem, at 4593.8Å, but this is also a weak band.

The red system, due to the low dispersion of the Steinheil in this region as well as the absence of sensitivity to red light of the Polaroid type 57 film, has not been seen in the molecular-beam fluorescence studies. Also, there is a substantial problem with detector sensitivity in this region. There is, however, one good possibility of an atomic line that could be used. The rubidium 7947.6Å line lies very near one of the (2,2) heads, at 7947.9Å. This is the strongest rubidium line. Osram rubidium lamps are available and an electrodeless rubidium lamp similar to that reported by R. Brewer[17] has been constructed. Soon it will be possible for us to investigate the red system in molecular-beam fluorescence, because a spectrograph which has better dispersion,

higher optical speed, and better resolution than the Steinheil — and which is equipped to use Polaroid infrared roll film — is being acquired by this Laboratory.

B. Light-Scattering in the Molecular-Beam Apparatus

A photomultiplier was set up with the molecular-beam apparatus in a way similar to that which would be used for a lifetime measurement. This was done in order to determine if the fluorescence can be detected, and to see if the scattered light seen by the photomultiplier was too great. It was found that the scattered-light level from both the exciting beam and the furnace was so high that it was impossible to tell if any fluorescence was being detected. The use of filters to cut out the red helped considerably. The photomultiplier detects scattered light at wavelengths differing from the fluorescent light without distinguishing them; the cruder wavelength rejection of the filters compared to the spectrograph is a restricting factor. The narrow filters that have been acquired for the lifetime measurement may give some further improvement. There is another, optical, reason that the photomultiplier sees more scattered light than the spectrograph: The light that is focused onto the slit of the spectrograph must all originate in a cone that is defined by the limiting aperture of the optical system as projected through the optical system back into the apparatus. This cone was intentionally chosen so that it gathered a minimum of scattered light. In the case of the photomultiplier the entire photocathode surface is capable of collecting light, through any angle in which there is a route to this surface. Even if a photon is scattered into the photomultiplier at a small angle with respect to the photomultiplier-tube surface, it is

detected. Moving the photomultiplier back, of course, decreased the scattered light, but in a lifetime measurement it is desirable to collect as large a solid angle of the fluorescence as possible, because the intensity is low to begin with. The problem presented by this observation is not as serious as it first seems. In the actual measurement of a lifetime, the signal that passes from the photomultiplier to the subsequent electronics is filtered through a frequency-selection circuit which shorts to ground those components of the signal that are not at the frequency of the light modulation. However, an excess of extraneous scattered light might still tend to saturate the photomultiplier, limiting the sensitivity of the detector to the true signal.

The system used in this preliminary investigation did not duplicate the optical system that will be used for excitation in the actual measurement of a lifetime. In the lifetime experiment there will be some type of device that will modulate the intensity of the exciting light. In this case the modulated exciting light will enter the vacuum chamber through a much smaller solid angle than the exciting light used in these preliminary investigations, and the scattered light should be severely reduced. The minimizing of scattered light from this source, then, must be considered independently with either the actual lifetime-measuring apparatus or a model system which duplicates the incident light angles. Some type of light baffle may be necessary in the apparatus if this persists as a problem.

The problem of light from the furnace is a more serious difficulty. The scattered light makes its way into the photomultiplier via several routes. First, some light goes directly into the photomultiplier from the radiation shields. There are not enough shields to prevent the

outermost shield from getting hot enough to glow. There are two things that can be done to eliminate this difficulty: (a) The radiation shields can be replaced with a larger number of more closely spaced shields, and (b) the size of the aperture in the cooling jacket can be reduced to correspond to the size of those in the radiation shields. The second source of scattered light is the open ends of the cooling jacket and the radiation shields. Much light from the heating tube comes out through these openings and is scattered off the surfaces of the electrodes, the electrode clamps, and the walls of the chamber. The new radiation shields should be made with a series of end caps which will contain this radiation.

C. Estimated Lifetime of the Lanthanum Monoxide Yellow-Green System

From the equation connecting the measured phase shift with the lifetime, given above, it can be seen that the proper choice of the modulating frequency is determined by the range in which the lifetime is expected to fall. There are two different light-modulating devices available for this work:[14] the water-tank modulator, which makes use of the Debye-Sears effect, and the rotating wheel, which is unique to this laboratory. The tank modulates at a frequency of 5.2 mc, and the wheel, depending on the choice of auxiliary controlling electronics, at 100 or 360 kc. The lifetime of the yellow-green system of LaO was estimated from the observed intensity of the molecular-beam fluorescence. The technique used was a variation of that applied by Hagan[18] to determine the oscillator strength of the C_2 Swan bands. The principle involved was to match the intensity of a tungsten lamp with that of the fluorescence. The tungsten filament lamp was placed inside the molecular beam

furnace at the point which was focused on the spectrograph slit by the condensing lens. Light from the lamp filled the optics of the system. The Steinheil spectrograph remained adjusted to the same slit width and focal settings that had been used for an observation of LaO fluorescence. By varying the lamp voltage and using neutral density filters, exposures were made on Polaroid type 57 film which matched in intensity the brightest feature seen in the LaO fluorescence. These exposures were made in the same exposure times as the photographs of LaO fluorescence being matched. The temperature of the lamp that gave the correct exposures was measured with an optical pyrometer. The temperature of the lamp used for fluorescence excitation was also measured, as seen through the window of the molecular beam apparatus. Finally, the solid angle of the light from the excitation source that was being intercepted by the beam was determined by making a scaled drawing of the geometry.

The temperature of the cell used to produce the beam during the photographing of the fluorescence spectrum was known from an optical system used to observe the cell orifice; using this temperature and the available thermodynamic data the concentration of LaO in the cell was calculated. This equilibrium pressure, together with the orifice dimensions was used to calculate the rate of vaporization of material from the cell, and thus, the steady-state pressure of LaO in the beam.

The Planck black-body radiation law was used to calculate the intensities of the exciting lamp and the lamp used to match the fluorescence at the wavelength under consideration. The calculated intensity of the matching lamp was reduced by the factor introduced by the neutral density filters. The intensity of the exciting lamp was multiplied by

a factor to correct for the approximate area of the source and the effective solid angle of light from the source that passed through the molecular beam. The logarithm of the ratio of these two intensities is thus equivalent to log $\frac{I}{I_o}$ in a direct absorption measurement. Since the approximate concentration, and the path length were known, the Beer-Lambert law was used to calculate a value of the absorption coefficient for the brightest feature in the band system.

The half-width of an atomic line observed under the same conditions was measured to determine the instrumental half-width. With the instrumental half-width known, it was possible to estimate how many rotational lines contributed to the observed intensity at the brightest point. The relative populations of these rotational states multiplied by the corresponding line strength factors were summed, and the resulting factor was applied to the absorption coefficient, which had been determined for the most intense feature, to obtain a value for the entire band system. An oscillator strength for the transition was then calculated from this absorption coefficient.

The oscillator strength was found to be on the order of $f = 0.1$; the corresponding lifetime is about 5×10^{-8} sec. If this is correct, the lifetime should be measured using the water tank modulator.

D. Conclusion

The results of these preliminary investigations can now be summarized: (a) The sodium D line-sourcestested seem to be inadequate as excitation sources for a lifetime measurement; a pressure-broadened sodium lamp may prove more successful. A more satisfactory exciting source would be a continuous lamp used in conjunction with interference

filters. (b) Light scattering from the furnace seems quite significant. Some suggestions were made to improve the situation, but the problem can only be properly considered when measurements are made with modulated light that duplicates the conditions of an actual measurement. (c) A radiative lifetime for the yellow-green system has been estimated which indicates that the Debye-Sears water-tank modulator would be the proper system to use for a lifetime measurement.

V. SUMMARY OF THE SPECTRA OF LANTHANUM MONOXIDE AND ITS HOMOLOGUES

A. Known Transitions and Energy Levels

In light of the determination of the $X^4\Sigma$ state as the electronic ground state of LaO, it is useful to review the known electronic spectra. In this discussion it is appropriate that a discussion of the homologous molecules, ScO and YO be included. Excellent reproductions of all of the band systems for these molecules that are discussed here appear in the atlas of oxide spectra prepared by Gatterer et al.[19]

There are four band systems known for LaO that are transitions involving the ground state. Three of these transitions were mentioned in connection with the fluorescence experiments used to determine the ground state. There systems were:

Red system	$A^2\Pi \rightarrow X^4\Sigma$	6860 to 9730 Å
Yellow-green system	$B^2\Sigma \rightarrow X^4\Sigma$	5015 to 6460 Å
Blue system	$C^2\Pi \rightarrow X^4\Sigma$	4340 to 4625 Å

Bands known in the ultra violet (3450 to 3710 Å) were measured by Jevons.[16] These bands were later partially vibrationally analyzed by Hautecler and Rosen,[20] who assigned all but one of the bands to two overlapping systems, both going to the ground state. They quite possibly are two components of a doublet system. The upper levels are designated D and F. The energy levels A, B, C, D, and F are shown schematically in Fig. 4.

Another, weaker, group of bands were reported by Meggers and Wheeler[5] in the red (6430 to 6825 Å); these bands, unlike the other

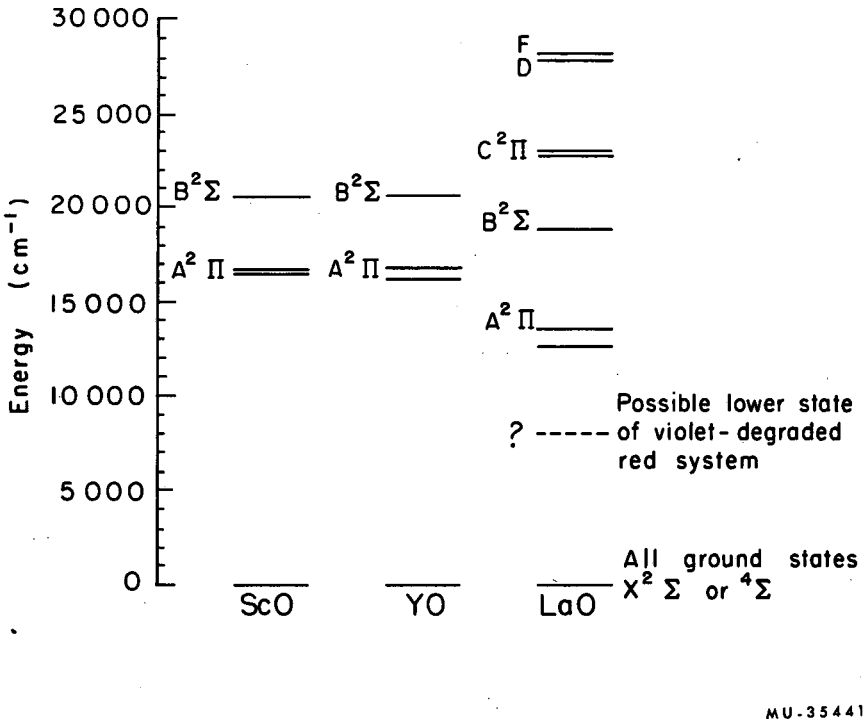
30 000
25 000
20 000
15 000
10 000
5 000
0
Energy (cm⁻¹)
B²Σ
A² Π
B²Σ
A² Π
F
D
C²Π
B²Σ
A² Π
?
Possible lower state of violet-degraded red system
All ground states X² Σ or ⁴Σ
ScO
YO
LaO
MU-35441

Fig. 4

red system, however, are degraded to the violet. In this case, also, Hautecler and Rosen have analyzed the spectrum as consisting of two band systems. Here, however, Hautecler and Rosen find the ω value of the ground state to be inconsistent with the structure of the systems, so they feel that these transitions are between excited levels. They designate these transitions $E \rightarrow ?$ and $G \rightarrow ?$. These authors suggest the possibility that the upper states of this transition are identical with the two components of the $C^2\Pi$ state, and that the lower level thus lies at around 7490 to 8210 cm^{-1}. A generalization of the technique used to determine the ground state to test this hypothesis is discussed below. A dashed line in Fig. 4 shows the approximate location of this lower hypothetical level.

Figure 4 also shows the known energy levels of ScO and YO. Two band systems are known in each molecule. These are analogous to the $A^2\Pi \rightarrow X^4\Sigma$ and $B^2\Sigma \rightarrow X^4\Sigma$ transitions of LaO. It seems reasonable that the lower levels of these transitions are the ground states of these molecules, as in the LaO case. In ScO the $A \rightarrow X$ transition is an orange system. As in the LaO red system, this transition was given a vibrational analysis by Meggers and Wheeler,[5] who designated it $A^2\Pi \rightarrow X^2\Sigma$, and more recently given a rotational analysis by Akerlind,[21] who reassigned the ground state, $X^4\Sigma$. The blue-green system of ScO was similarly called $B^2\Sigma \rightarrow X^2\Sigma$ by Meggers and Wheeler,[5] and later given a rotational analysis by Akerlind.[21] The orange and blue-green transitions of YO were similarly analyzed by Meggers and Wheeler,[5] and also independently by Johnson and Johnson.[22] When these bands were given a rotational analysis by Uhler and Akerlind,[23] however, the extra lines found in the LaO and ScO bands were not found, even though higher

resolution[24] was used to look for them.

B. Ground-State Multiplicity Problem

Akerlind suggests[24] that the simple spectra observed for YO can be explained by assuming that the value of 3ϵ (the multiplet splitting term) differs in sign in ScO and LaO. (The analysis gives only the magnitude, not the sign of 3ϵ.) In this way the value of 3ϵ may be changing sign as the mass of the molecule is increased, and thus be nearly zero for YO. In this case transitions involving the $^4\Sigma$ state would have incompletely resolved structure. Klemperer,[25] has argued, however, that the splitting may be caused by the influence of nuclear spin, and that the older $^2\Sigma$ assignment may be the correct one.

Molecular orbital correlations establish that both $^2\Sigma$ and $^4\Sigma$ states should exist in these molecules. Table I shows some of the expected low-lying molecular orbital configurations and the electronic states to which they would give rise. A consideration of the low-lying states of the nine valence-electron diatomic molecules is given by Shetlar.[26] However, he considers only compounds which do not involve transition metals. Column 1 of Table I shows the low-lying configurations expected in the molecules discussed by Shetlar. The oxides of scandium, yttrium, and lanthanum, however, should have additional low-lying molecular orbitals which are derived from a d electron. The relative order of the new states that derive from the additional molecular orbitals and their order with respect to the states of Column 1 is not known. Column 2 of the table gives expected low-lying configurations involving one σ orbital derived from a d atomic orbital; columns 3 and 4 give configurations involving one $d\pi$ and one $d\delta$ orbital

Table I. Low-lying molecular orbital configurations of valence electrons in scandium, yttrium and lanthanum monoxides

Column 1

M.O. Configurations	Terms
$s\sigma^2\ s\sigma^2\ p\pi^4\ \ \ p\pi^4$	$^2\Pi$
$s\sigma^2\ s\sigma\ p\pi^4\ p\sigma^2$	$^2\Sigma^+$
$s\sigma^2\ s\sigma^2\ p\pi^3\ p\sigma^2$	$^2\Pi$
$s\sigma^2\ s\sigma^2\ p\pi^4\ p\sigma$	$^2\Sigma^+$

Column 2

M.O. Configurations	Terms
$s\sigma^2\ s\sigma\ p\pi^3\ p\sigma^2\ d\sigma$	$^2\Pi(2),\ ^4\Pi$
$s\sigma^2\ s\sigma^2\ p\pi^2\ p\sigma^2\ d\sigma$	$^2\Sigma^+, {}^2\Sigma^-, {}^2\Delta, {}^4\Sigma^-$
$s\sigma^2\ s\sigma^2\ p\pi^3\ p\sigma\ d\sigma$	$^2\Pi(2), {}^4\Pi$
$s\sigma^2\ s\sigma^2\ p\pi^4\ \ \ d\sigma$	$^2\Sigma^+$

Column 3

M.O. Configurations	Terms
$s\sigma^2\ s\sigma\ p\pi^3\ p\sigma^2\ d\pi$	$^2\Sigma^+(2),\ ^4\Sigma^+,\ ^2\Sigma^-(2),\ ^4\Sigma^-,\ ^2\Delta(2),\ ^4\Delta$
$s\sigma^2\ s\sigma\ p\pi^2\ p\sigma^2\ d\pi$	$^2\Pi(3),\ ^2\Phi,\ ^4\Pi$
$s\sigma^2\ s\sigma^2\ p\pi^3\ p\sigma\ d\pi$	$^2\Sigma^+(2),\ ^4\Sigma^+,\ ^2\Sigma^-(2),\ ^4\Sigma^-,\ ^2\Delta(2),\ ^4\Delta$
$s\sigma^2\ s\sigma^2\ p\pi^4\ \ \ d\pi$	$^2\Pi$

Column 4

M.O. Configurations	Terms
$s\sigma^2\ s\sigma\ p\pi^3\ p\sigma\ d\delta$	$^2\Pi(2),\ ^4\Pi,\ ^2\Phi,\ ^4\Phi$
$s\sigma^2\ s\sigma^2\ p\pi^2\ p\sigma\ d\delta$	$^2\Sigma^+(2),\ ^4\Sigma^+,\ ^2\Sigma^-(2),\ ^4\Sigma^-,\ ^2\Delta(4),\ ^4\Delta(2),\ ^2\Gamma,\ ^4\Gamma$
$s\sigma^2\ s\sigma^2\ p\pi^3\ p\sigma\ d\delta$	$^2\Pi(2),\ ^4\Pi,\ ^2\Phi,\ ^4\Phi$
$s\sigma^2\ s\sigma^2\ p\pi^4\ \ \ d\delta$	$^2\Delta$

respectively. The order of the molecularorbital configurations within these columns is estimated. In most of the configurations giving rise to a $^4\Sigma$ term, a $^4\Delta$ term is also found. Hund's rules, if they hold for these molecules, would predict the $^4\Delta$ to lie lower in energy than the $^4\Sigma$. Further the intensity of the X$\leftarrow$B band system (approximately f = 0.1, as discussed above) makes it seem unlikely that this system is a quartet-doublet transition. These correlations make it seem likely that the $^4\Sigma$ assignment of the ground state is incorrect.

C. E and G Transitions of Lanthanum Monoxide

The suggestion of Hauteler and Rosen[20] that the system of bands which they refer to as the E $\rightarrow$? and G $\rightarrow$? transitions may actually be transitions from the $C^2\Pi$ state can be tested through the use of a molecular-beam fluorecence technique. As was reported earlier in this work, the $C^2\Pi \rightarrow X^4\Sigma$ fluorescence has been produced by excitation with a high-temperature tungsten lamp. Since it is known that it is possible to populate the C level, the E and G transitions may be seen in fluorescence if the region 6825 to 6430 Å is examined. It may be necessary to run the lamp at an overvoltage or use another excitation source to cause sufficient population of the upper state for this transition. If the transition is seen, a series of short-wavelength cutoff filters could be used to filter the exciting-light beam, thus allowing excitation only to levels at progressively lower energies. As the energy corresponding to the upper state of the transitions in question are passed, the band system will disappear. If the C state is the upper level of the transition, the transition should disappear when a filter which cuts off at about 4625 Å should eliminate the band systems.

VI. SUMMARY AND CONCLUSION

The molecular-beam fluorescence technique has been successfully applied to establish the ground state of lanthanum monoxide as $X^4\Sigma$. The technique can now be applied to many of the diatomic molecules for which transitions are known, but in which the ground state is uncertain, for example, the oxides and halides of transition metals. This technique can be generalized to determine the positions of the lower state of some bands for which an analysis is not available once the ground state is known; this may be especially useful for spectra that have proven too complex for analysis.

The molecular beam appears to be a suitable system for use in the measurement of radiative lifetimes by the phase-delay technique, and the groundwork has been laid for such a measurement of the yellow-green system of LaO. An estimate of the lifetime indicates that the water-tank-modulator apparatus is the best suited for such a measurement.

ACKNOWLEDGEMENTS

This work was undertaken with the guidance of Professor Leo Brewer. He suggested the original problems, provided valuable comments and suggestions during the course of the work, and — both through personal individual discussions and through his weekly group seminars — helped me keep my work in perspective with the more general problems of science. I gratefully acknowledge his leadership.

I am in addition thankful to Dr. John Link who was of great assistance in the design and construction of the apparatus; most of the important design features originated with him. Also, he helped me in innumerable other ways.

Dr. G. M. Rosenblatt and Dr. Beat Meyer provided direction and suggestions in the early stages of this research, and also deserve my thanks.

This work was done under the auspices of the United States Atomic Energy Commission.

REFERENCES

1. G. N. Lewis and M. Randall, revised by K. Pitzer and L. Brewer, Thermodynamics, 2nd ed. (McGraw-Hill Book Company, Inc., New York, 1961).

2. R. Berg, The Measurement of Radiative Lifetimes (Ph.D. Thesis), UCRL-9954, March 1962.

3. F. J. Studer and R. F. VanBeers, J. Opt. Soc. Am. 54, 945-7 (1964).

4. G. K. T. Conn and G. K. Eaton, J. Opt. Soc. Am. 42, 143-4 (1952).

5. W. F. Meggers and J. A. Wheeler, J. Res. Nat. Bur. Std. (U.S.) 6, 239-75 (1931).

6. L. Akerlind, Arkiv Fysik 22, 65-93 (1962).

7. P. C. Keenan, Astrophys. J. 107, 420-1 (1948).

8. P. C. Keenan, Astron. J. 55, 74 (1950).

9. W. P. Biddleman, Astrophys. J. 117, 377-9 (1953).

10. P. C. Keenan, Astrophys. J. 120, 484-505 (1954). This paper completely reviews the classification of S-type stars, the LaO red bands are given as a secondary criterion for classification. A list of S-type stars then known notes the relative intensity of the LaO red bands when seen.

11. A. G. Velghe, Astrophys. J. 139, 190-1 (1964).

12. R. G. Brewer, A Method for Determining Radiative Lifetimes of High-Temperature Molecules (Ph.D. Thesis), UCRL-8387 Part I, July 1958.

13. F. E. Stafford, Measurement of Radiative Lifetimes (Ph.D. Thesis), UCRL-8854, September 1959.

14. L. Brewer, C. G. James, R. G. Brewer, F. E. Stafford, R. A. Berg, and G. M. Rosenblatt, Rev. Sci. Instr. 33, 1450-5 (1962).

15. A. Chutjian (Inorganic Materials Research Division, Lawrence Radiation Laboratory and Department of Chemistry, University of California, Berkeley), private communication.

16. W. Jevons, Proc. Phys. Soc. (London) 41, 520 (1929).

17. R. G. Brewer, Rev. Sci. Instr. 32, 1356-8 (1961).

18. L. Hagan, The Absolute Intensity of C_2 Swan Bands (Ph.D. Thesis), UCRL-10620, March 1963.

19. A. Gatterer, J. Junkes, and E. W. Salpeter, with the cooperation of B. Rosen, Molecular Spectra of Metallic Oxides (Specola Vaticana, Vatican City, 1957).

20. S. Hautecler and B. Rosen, Bull. Classe Sci. Acad. Roy. Belg. 45, 790-803 (1959).

21. L. Akerlind, Arkiv Fysik 22, 41-64 (1962).

22. L. W. Johnson and R. C. Johnson, Proc. Roy. Soc. (London), Ser. A 133, 207-19 (1931).

23. U. Uhler and L. Akerlind, Arkiv Fysik 19, 1-16 (1961).

24. See ref. 6, pp. 86-7.

25. W. Klemperer (Department of Chemistry, Harvard University, Cambridge, Mass.), private communication.

26. M. D. Shetlar, Low-Lying Energy Levels of Nine Valence-Electron Diatomic Molecules (Ph.D. Thesis), UCRL-11979, April 1965.

FIGURE CAPTIONS

Fig. 1. A cross-sectional view of the molecular-beam furnace assembly.

Fig. 2. A schematic diagram of the geometry of the molecular-beam apparatus.

Fig. 3. The lanthanum monoxide spectrum. (a) The yellow-green system in fluorescence. (b) The yellow-green system in a carbon arc. (c) The blue (left) and yellow-green systems in fluorescence; the lower half shows mercury and cadmium lines as a wavelength scale.

Fig. 4. Electronic energy levels of LaO, ScO, and YO.

This report was prepared as an account of Government sponsored work. Neither the United States, nor the Commission, nor any person acting on behalf of the Commission:

A. Makes any warranty or representation, expressed or implied, with respect to the accuracy, completeness, or usefulness of the information contained in this report, or that the use of any information, apparatus, method, or process disclosed in this report may not infringe privately owned rights; or

B. Assumes any liabilities with respect to the use of, or for damages resulting from the use of any information, apparatus, method, or process disclosed in this report.

As used in the above, "person acting on behalf of the Commission" includes any employee or contractor of the Commission, or employee of such contractor, to the extent that such employee or contractor of the Commission, or employee of such contractor prepares, disseminates, or provides access to, any information pursuant to his employment or contract with the Commission, or his employment with such contractor.