UCRL-11952-rev

University of California

Ernest O. Lawrence Radiation Laboratory

TWO-WEEK LOAN COPY

This is a Library Circulating Copy which may be borrowed for two weeks. For a personal retention copy, call Tech. Info. Division, Ext. 5545

BEVATRON EXPERIMENTAL AND EXTERNAL-PROTON-BEAM MAGNET POWER-SUPPLY SYSTEMS

Berkeley, California

DISCLAIMER

This document was prepared as an account of work sponsored by the United States Government. While this document is believed to contain correct information, neither the United States Government nor any agency thereof, nor the Regents of the University of California, nor any of their employees, makes any warranty, express or implied, or assumes any legal responsibility for the accuracy, completeness, or usefulness of any information, apparatus, product, or process disclosed, or represents that its use would not infringe privately owned rights. Reference herein to any specific commercial product, process, or service by its trade name, trademark, manufacturer, or otherwise, does not necessarily constitute or imply its endorsement, recommendation, or favoring by the United States Government or any agency thereof, or the Regents of the University of California. The views and opinions of authors expressed herein do not necessarily state or reflect those of the United States Government or any agency thereof or the Regents of the University of California.

UCRL-11952

UC-28 Particle
Accelerator and
High Voltage
Machine

Research and Development

UNIVERSITY OF CALIFORNIA

Lawrence Radiation Laboratory
Berkeley, California

AEC Contract No. W-7405-eng-48

BEVATRON EXPERIMENTAL AND EXTERNAL-PROTON-BEAM MAGNET POWER-SUPPLY SYSTEMS

Leslie T. Jackson

February 10, 1965

Printed in USA. Price $2.00. Available from the Clearinghouse for Federal Scientific and Technical Information, National Bureau of Standards, U. S. Department of Commerce, Springfield, Virginia.

BEVATRON EXPERIMENTAL AND EXTERNAL-PROTON-BEAM MAGNET POWER-SUPPLY SYSTEMS*

Leslie T. Jackson

Lawrence Radiation Laboratory
University of California
Berkeley, California

February 10, 1965

ABSTRACT

Magnet power-supply systems for both experimental and external-proton-beam (EPB) magnets used at the Bevatron are described as feedback control systems. Individual components contained in the systems are also described. The power-controlling component first used in the supplies was a three-phase magnetic amplifier. Silicon-controlled-rectifier (SCR) bridges are being used now. The requirements placed on the experimental magnet supply systems are ± 0.1% current regulation with ± 10% line-voltage perturbations occurring every pulse of the Bevatron. The EPB systems must track to at least ± 0.1% a dynamic signal closely related to the proton beam energy. The performance criteria for EPB systems involve both error coefficients and transient response.

The chronology of the type of power-controlling device used in the systems follows the progress of the SCR. Magnetic amplifiers were first used for experimental magnet supplies, followed by transistor-bank and magnetic-amplifier combinations for the first four EPB systems in order to achieve the required dynamic response. The next three EPB systems utilized SCR supplies purchased with self-contained firing circuits. All the remaining EPB and experimental supplies utilize SCR bridges, with both the control and firing circuits designed at the Lawrence Radiation Laboratory. These supplies are all in the 100-KW range at 1000 A or more. Operational amplifier techniques are used in tailoring the dynamic characteristics of the systems. The magnet current is monitored by a transductor, a magnetic device providing high-level voltage signals proportional to current with wide bandwidth, dc isolation, and excellent temperature stability.

GENERAL DESCRIPTION

A large variety of magnets are used in conjunction with the experimental physics program at the Bevatron. These magnets fall into two general categories, quadrupole and bending magnets, both of which are used in experimental channels to bend and focus the beam to the various detectors that are used to record events. The dc power requirements of these magnets generally vary from 50 to 250 kW. Because the experimental program is quite variable and experiments change frequently, the power-supply systems for these magnets should be flexible. Flexibility involves not only widely variable output-current and voltage capabilities, but also ease of connection and portability so that ac and dc lead lengths can be minimized and the experimental area utilized most effectively. These requirements are met by portable three-phase-bridge rectifiers which run off the 480 V line. Either magnetic amplifiers or silicon controlled rectifiers control the output. In the past, large motor-generator sets of various ratings were the only source of power for the magnets, but to expand this approach to the current level of operation would have required unreasonably extensive dc cable or bus runs about the experimental area and limited flexibility.

The first power supplies used here at the Bevatron were three-phase, full-wave, bridge magnetic amplifiers. These supplies utilize a magnetic reactor in series with each of the rectifier banks. The most recently purchased supplies utilize silicon controlled rectifiers in place of the rectifier and reactor combinations. The silicon-controlled-rectifier (SCR) type supply can be considerably smaller as it eliminates the large reactors in the power supply.

The external-proton-beam power supplies are similar to the experimental supplies except that each system is associated only with a particular magnet and therefore is permanently situated in a convenient location. The first four systems each utilize banks of transistors in conjunction with magnetic amplifiers to satisfy the dynamic requirements of tracking the proton-beam energy. Later systems are controlled solely by SCR's.

Both the magnetic-amplifier and SCR supplies control the output by acting as switches in series with the ac supply voltage, the average output being determined by the relative time the switches are open or closed. Very little current flows before the SCR is fired or when the magnetic amplifier is unsaturated. At the time the SCR fires or the magnetic amplifier saturates, their impedance becomes very low, and all the supply voltage appears across the load. This pulse-width control is efficient, because little power is consumed by the controlling elements, but it has the disadvantage of causing the line current to lag behind the voltage as the supplies are phased back from the rated output voltage of the supply. A spectrum of harmonics in the line current results from the ever-decreasing width segments of constant-amplitude secondary current which occur as the supply is phased back.

The attempt has been made to provide power supplies of various voltage and current ratings which individually or in series and (or) parallel combinations match the power requirements of the standard magnets. However, because magnets are seldom run at their ratings, there are a substantial number of supplies running at approximately half of their output and the kVA

requirements of the total auxiliary supply system are substantially larger than would be expected from the kilowatt output. The power factor of a supply at half output is approximately 0.5.

The different experimental power supplies in use at the Bevatron all have similar physical features. They are powered from three-phase 480-V ac cables which plug into wall receptacles by means of Crouse-Hinds power plugs. The dc output current is carried by multiple 0000 cables to the magnet loads. All the power supplies utilize water cooling on the diode heat sinks. The most recently purchased SCR supplies contain water-cooled transformers and chokes.

Magnet time constants range from 50 msec to 2.5 sec; the resistances vary from 17 to 240 mΩ, and the inductances varying from 1 to 500 mH. For maximum flexibility in usage with the various supplies and requirements around the Bevatron it would be desirable to have the experimental supplies capable of running both connected in series or parallel or in multiple combinations of series-parallel. The series requirement is readily provided for on all types of supplies by providing a mode of operation where one of the two supplies in the series runs as a current regulator and the other runs as an open-loop biased power supply. When running in biased mode, called voltage control, the regulator becomes a bias supply to set the output voltage of the supply to a certain level. The parallel mode of operation is not feasible with magnetic amplifiers because of internal feedback. The new SCR supplies are paralleled by summing the individual current signals in one regulator and providing the same gating pulses to both supplies.

Both the magnetic-amplifier and the SCR power supplies have diodes across the outputs of the supplies which are commonly referred to as "free-wheeling" diodes. When the supplies are phased back to less than half the maximum output and are powering inductive loads, the diodes conduct when the output voltage goes to zero on each sixth of a cycle. The diode is necessary for the normal operation of the magnetic amplifiers, and has been retained in the SCR supplies to avoid the possibility of over-voltaging a magnet's insulation in case all fuses in the SCR supply open with energy still remaining in the magnet. For a particular application involving inversion during a part of each Bevatron pulse, thyrite replaces the free-wheeling diode for magnet protection.

PERFORMANCE REQUIREMENTS PLACED ON THE SYSTEMS

A general requirement placed on the experimental magnet power-supply systems is that the current shall be maintained to a given value within ±0.1% over both long and short periods of time. Any perturbations in the current caused by up to 10% line perturbations shall not exceed this tolerance. To achieve this kind of long-term regulation the variation with temperature of the current monitoring device, the reference, and the amplifier must be small enough that regulation will be maintained over a temperature range of 40°C. The zener diode reference used in the latest supplies is the 1N939A, which has a temperature coefficient of 0.0005%/°C.

The EPB systems must track to at least ±0.1% a dynamic signal closely related to the proton beam energy. In addition to the ramp energy signal,

some magnet systems require a dc bias so that the sum of the two signals generate the correct field shape for slow spills of beam. The EPB systems are subject to the same perturbations as the experimental supplies.

The perturbations that affect the operation of the supplies are mainly line voltage variations and perturbations and the change in resistance of the magnet as the temperature of the magnet changes. The magnets are all water-cooled and the water temperature generally changes about 10°C as the magnetic field comes up to operating levels. This then amounts to a 4% change in resistance of the copper windings. The line voltage perturbations are either long-term changes where the line changes up to 3% and stays at a level for a sustained period, or perturbations occurring every pulse of the Bevatron as the contactors on the main motor generator sets are connected and the external beam supplies are pulsed. These types of perturbation act as a series of steps or impulses on the system and not only couple into the load part of the circuit but also into the controlling elements, especially into certain types of SCR firing circuits.

Near the beginning of a Bevatron pulse, the line-voltage waveshape instantaneously drops approximately 10% near the end of each half-cycle, because all the EPB supplies are in their phased-back firing position. As the pulse continues, the output of the EPB supplies increases, and the point where the instantaneous line voltage decreases 10% advances accordingly. This advance continues until peak output, and then the point of 10% decrease retraces its path. In addition to lowering the average value of the line voltage as the pulse progresses, this type of perturbation affects magnetic amplifiers by changing the volt-seconds available in a given part of the sine wave. The SCR supplies are affected in the firing circuits, some more drastically than others. With the firing circuits decoupled from the line, the derivatives of this large instantaneous change of voltage can still be picked up and cause misfiring.

An additional component of current which must fall within the ± 0.1% specification is the ripple component of the current which is caused by the output being a phased-back voltage source. All supplies operating at the Bevatron are three-phase bridges, so the frequency component of the current is six times the power-line frequency, or 360 cps. The closed loop around the pulse-width-controlled power supplies has a bandwidth of 120 cps so all the reduction in the magnitude of ripple going from voltage to current is done by the inductance of the magnet unless the output voltage is also filtered. The peak-to-peak 360-cps fundamental is 100% of the average output of the supply at half the rated output. The amount of ripple present in the current cannot be simply calculated from the corner frequency of the magnet, because at higher frequencies, nominally around 30 cps, the skin depth of the iron starts playing a significant part in decreasing the effective inductance of the magnet. However, the amount of ripple in the actual field is approximately the same at all frequencies substantially above the corner frequency, as the applied voltage determines the rate of change of flux.

FEEDBACK-SYSTEM DESIGN

The control systems synthesized have assumed various forms depending on the characteristics of the power supplies and the requirements to be satisfied. The different amplifiers and actuators are physically described along with the power supplies with which they are used. The systems must be analyzed for the magnet current response to line voltage perturbations and to variations in reference. In the early magnetic-amplifier power supplies, line-voltage response was the dominant factor because there was no intention of tracking dynamic reference signals to high accuracy, in view of the slow response of the system. The EPB system requirement of tracking the beam energy exceeded the capabilities of the magnetic amplifier supplies, so large transistor banks were added. Subsequent EPB systems have utilized the bridge SCR supplies without the addition of transistors, and have been designed with the requirement of dynamic tracking in mind.

The approach to system design after satisfying the dynamic power requirements has been to optimize the output response to both line voltage perturbation and reference inputs. This optimization is a compromise between the best response to either one or the other input. Minor loop feedback from the power supply voltage output was used in the magnetic amplifier supplies but was not found necessary in the SCR supplies.

As the typical magnet time constants are not long enough to satisfy the dominant pole requirements determined by the open-loop gain characteristics of the system, a pole-zero combination is inserted in the loop, with the zero occurring in the vicinity of the magnet pole. This compensation is usually inserted by minor loop feedback; it occurs in the SCR system around the amplifier along with lead network compensation if the power supply has a filter on the output voltage. The dynamics of the closed loop response are determined by root-locus construction, with closed-loop poles normally 60 deg from the imaginary axis.

The linear part of the system is basically a two-pole configuration with the dominant pole and the high-frequency-amplifier pole determining the closed-loop response. However, the nonlinear part of the system--either the magnetic amplifier or SCR power supply--really determines the high-frequency characteristics. The closest analytical approach to the SCR supply system found in the literature is that of pulse-width modulated systems, the difference being that the SCR supplies work from a sine-wave power source rather than dc. The magnetic amplifier is additionally complicated by the feedback that exists internally from the output to the input of the self-saturating type. This feedback effectively introduces a time constant in addition to a time delay.

Murphy makes the point that a pulse-width modulated system cannot be adequately represented by linear sample-data theory unless the pulse width is so small compared to the sampling period that the impulse approximation becomes valid.[1] Through the use of system-difference equations and separation of linear and nonlinear terms, the output at the sampling instants can be expressed as a function of the sampled error. Application of Z-transform theory leads to an exact solution for the error at sampling instants. A modified describing-function method is derived for stability studies.

Rather than going through this non-linear worst-case approach to the problem, the SCR-system loop has been treated as a linear sampled-data system with a 2.67-msec (360-cps) sampling rate. The loop is designed so that the loop gain is unity at one-third the sampling frequency or 120 cps, which gives an adequate phase margin. The magnetic amplifier system loops must be additionally compensated for the added pole contributed by the magnetic amplifier.

The response of the system to line voltage perturbations is determined not only by the closed-loop complex-pole positions, but also by the zero at the location of the dominant open-loop pole introduced as compensation at the amplifer. This zero occurs because the dominant pole is in feedback for line-voltage perturbations.

It is convenient to define the errors in tracking a ramp function at the reference as the position error and the velocity error. The position error is the error signal required to achieve the required range of output current under steady-state conditions. In following a ramp, the position error is therefore also a ramp equal to the output current divided by the forward gain, $e_p = (I\ \text{magnet})/G_{dc} = K_1 t/K_p$, where K_p is defined as the position-error constant, and K_1 is the slope of the ramp. By making the forward gain high enough, one can make the position error negligibly small compared to the velocity error in the external-beam systems.

The velocity error is constant during a ramp and equal in magnitude to

$$e_v = \frac{K_1}{K_v} \tag{1}$$

where the velocity error constant K_v is defined by

$$\frac{1}{K_v} = \sum_{j=1}^{n} \frac{1}{p_j} - \sum_{j_p=1}^{m} \frac{1}{z_j} , \tag{2}$$

where p_j are the closed-loop poles, and z_j the closed-loop zeros of the system. This expression shows that for a system with dominant left-half plane poles, the wider the bandwidth the greater the velocity constant and the lower the velocity error. Truxal describes pole-zero configurations for achieving an infinite velocity constant,[2] but unfortunately the transient response is generally adversely affected by using these configurations. The external-beam systems must follow the beam energy into "flat-top" operation and therefore need fast transient response and good steady-state ramp characteristics so that a minimum amount of recovery time is necessary when entering and leaving the flat-top part of a pulse.

In EPB systems the position error has been reduced well below the velocity error by running as high a dc-loop gain as allowed by the transient response to line-voltage perturbations. As the dc gain is increased, the introduced dominant pole must occur at proportionately lower frequencies. Because this dominant-pole position becomes zero in the closed-loop current response to voltage perturbation, the magnitude of transient overshoots also increases. In EPB systems the position constant, K_p, is between five and ten thousand, while the velocity constant, K_v, is between 1000 and 2000.

MAGNETIC-AMPLIFIER POWER SUPPLIES

As mentioned earlier, the average output of the magnetic amplifier is determined by a process of time-sharing between the saturated and unsaturated states of the reactor. If we expand this concept to the three-phase bridge configuration where there are reactors in series with each of the six rectifiers, each reactor controls the average output only during the period of 120 deg when that phase is active. During the remainder of the cycle the reactor is reset, or driven out of saturation, so that during the subsequent period it can absorb volt-seconds again as it is driven to saturation by the supply voltage (commonly referred to as the gating period). The reactor is reset by means of a control winding which is connected in series with the control winding of the adjacent 180-deg reactor. Both windings are driven from a dc control source. The resetting of a reactor is accomplished by the sum of the dc control-source voltage and the reflected gating voltage applied to the other reactor.

Two results of analytical importance follow from the mode of operation of the magnetic amplifier. A change in the control signal does not immediately appear in the output, because the only coupling between the two is that the amount of resetting during one period determines the average output level in the following period. If the resetting was done only by a control source, a maximum delay of one-sixth of a cycle at 60 cps would result in the three-phase full-wave bridge. Because of feedback from the output through the gating winding of the other reactor the situation is greatly complicated and the response becomes a function of the value of the output during the previous four or five sixth cycles as well. The response can be approximated by a half-cycle time delay and a time constant. If the time constant is long, the delay can be neglected.

The first magnetic-amplifier supplies purchased for the Bevatron in 1959 were rated 150V at 1000 A. This supply has three control windings, all requiring 2 A for full control of the output. A 100-V, 2 A source into one control winding biases off the power supply. The output level is controlled by the current signal in the second winding which drives the supply to the correct level. The actuator used in these supplies is a Kepco power supply, rated 24V at 2 A with the error signal formed between a transductor signal proportional to magnet current and the internal reference which normally is used to determine the regulated output voltage of the supply. Using a Kepco amplifier as an actuating element in a closed-loop system external to the power supply has the disadvantage that the amplifier has internal compensation designed primarily with respect to operation of the supply as a closed-loop voltage regulated supply. The amplifiers are compensated at various frequencies which are determined partly by the requirements of its normal closed loop and also partly by the physical layout of the power supply itself. Two voltage loops were used to provide compensation in this power-supply system. The first is around the amplifier itself, with an adjustable resistor and capacitor in series, feeding a current signal into the summing junction. The second is from the output of the main three-phase magnet power supply itself with a series capacitor and an adjustable resistor, again feeding into the summing junction. A third feedback element, the transductor, produces an output voltage proportional to the magnet current. This voltage was

converted into a current signal into the summing junction by means of a helipot which determines the level of current in the magnet itself.

The other two magnetic amplifier power systems in use in the Bevatron are both dual supplies. The dual 90 kW supply has two 90 V 1000 A dc outputs, and the dual 49 kW supply has two 70 V, 700 A dc outputs. With the two supplies in the same unit being powered by separate secondaries on the power transformer, running the outputs separately or in series provides convenient flexibility of operation not available with separately packaged supplies. The dual supplies have a circuit breaker and contactor only in the primary side of the transformer as part of the economy of dual packaging, so the individual regulator is called on to act as a turn-off bias when output voltage of a supply is not desired. This turning off is done by a relay which also feeds back the output of the power supply into a second control winding to act as a backup in case the regulator power fails. The supply output always has some finite minimum voltage determined by the reactor-magnetizing current flowing through the load resistor. There are three control windings on the dual supplies, rated at 1, 2, and 10 A.

After our experience with the regulation system on the 150 kW supply and finding nothing available on the market to perform the function, it was felt that an all magnetic amplifier system would have the appropriate design features and desired reliability. The gain-bandwidth requirements for this type of system are satisfied by generating power at 1600 cps to supply the magnetic amplifiers. There are two feedback loops: a current loop through a transductor and an ac-coupled voltage loop. In addition to current regulation, the system can also be used as a bias source to control the power supplies in an open-loop fashion. This mode of operation is designated "voltage" control because the supply is always used as an unregulated voltage source in series with another current-regulated supply. Remote voltage control utilizes the potentiometer used for current control, and local voltage control permits the supply to be operated by a potentiometer on the regulator. Local control mainly checks on the operation of the regulator package before the main supply is turned on. A meter indicates whether the output voltage of the regulator follows the potentiometer. For a given current the perturbations introduced in the magnet current by line variations are not greater with multiple supplies in series than with a single unit, because the magnet resistance is proportionately greater.

The magnetic-amplifier regulator is made up of a 1600-cps power supply, preamplifier and driver magnetic amplifiers, current reference, and transductor. The 1600-cps power supply comprises two units--a self-oscillating low-powered square-wave generator, and a second 120-W generator driven from the first. The preamplifier and driver magnetic amplifiers are cascaded. In proportion to their importance, the preamplifier reactors occupy a very small part of the chassis, being only slightly larger than a person's thumb. The current reference and transductor form the summing junction, because the comparison is done by summing ampere-turns on the preamplifier. The transductor is powered by the 1600-cps generator. For ampere-turns comparison, a conductor carrying the magnet current could run through the preamplifier directly, but this would require a large-window core and many thousand reference turns to get a small reference current up to the

ampere-turn equivalent of the magnet current. The transductor acts as a dc current transformer to convert the magnet current to a more reasonable level for ampere-turns comparison.

The magnetic-amplifier regulator drives the three-phase magnetic amplifier towards zero output, rather than working against a bias supply as in the 150-kW units. Because the regulator is interlocked, the system is still fail-safe. Not only does the magnetic amplifier have an offset gain characteristic, but it is also nonlinear, because when the input is increased beyond that value required for minimum output, the output starts increasing again and eventually reaches maximum output. In a closed-loop system this region provides positive feedback, and of course must be avoided. It can be shown that it is not possible to get into this region with the magnet loads intended for these supplies.

In both the 150-kW and the dual supplies the loop gain of the regulation system goes through unity somewhere between 10 and 20 cps, with a loop gain of 200 to 500. This bandwidth limitation is caused mainly by the time-response characteristics of the three-phase magnetic amplifier. The magnetic amplifier has a transfer characteristic of a half-cycle delay plus a time constant which is on the order of seven half cycles, or in this case around 60 msec. This time constant occurs even with substantial resistance in series with the control windings and proportionally greater voltage available to cause the required control current to flow. The maximum speed of response that we have achieved here with large amounts of forcing in the control windings is about three half cycles. Rectifier unblocking limits the speed of response at this point. For the smaller model three-phase magnetic amplifier, the theoretical representation is

$$\frac{E_0(S)}{NE_c(S)} = \frac{1}{1 + GN^2 R_c - e^{-TS}} \left[\frac{3\alpha}{\pi} e^{-TS} + e^{-2TS} + \left(1 - \frac{\alpha 3}{\pi}\right) e^{-4TS} \right] ,$$

where e^{-nTS} represents a time delay of n sixth cycles, α is the firing angle, and G is the gain of the unit in volts per ampere. The actual response of a small magnetic amplifier with well-matched cores from the factory can be shown to be accurately predicted by this equation. Some of the reasons for the long response time of large power supplies compared to the small unit are mismatched cores, poor quality core material, and thicker magnetic laminations. This representation has been experimentally verified for the parallel-connected-control-winding, three-phase, bridge magnetic amplifier.[3]

TRANSDUCTORS

The transductor is an interesting device that produces high-level voltage signals proportional to current and can have a bandwidth from dc to megacycles with only magnetic coupling between the signal winding and output winding of two or more reactors (see Fig. 1). These reactors combined with an ac source, load resistor, and appropriate diodes make up the circuit. The essential idea is that with two cores and a current source in the signal winding (in our case, a bus carrying magnet current through the center of the core) the circuit is arranged so that one or the other of the two cores is always in

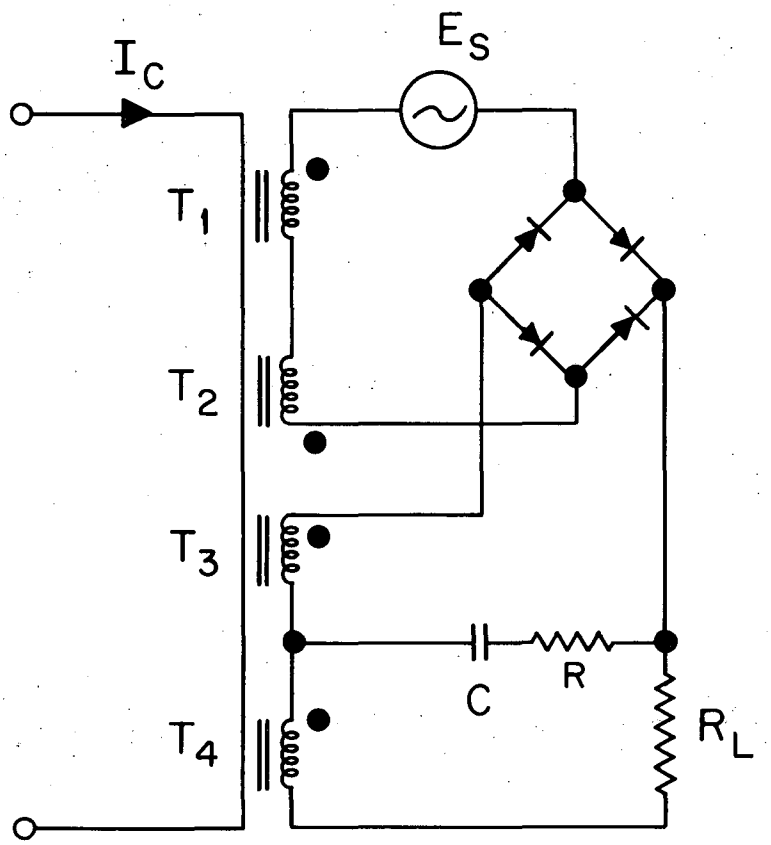

MUB-5242

Fig. 1. Transductor. Series-connected saturable-reactor circuit with cores added for filtering.

an unsaturated state. Having one or the other core unsaturated means there is always magnetic coupling between windings and therefore bandwidth from dc to whatever frequency the distributed inductance and capacitance determine. The transductor is like an infinite B-H loop core in capacity to absorb volt-seconds. Always having coupling from input to output is exactly the opposite in principle from the operation of the magnetic amplifier. The magnetic amplifier transmits information from input to output only because the reset done on the core by the input during one period determines when the core saturates the next period, and therefore the output level. There is never direct coupling in the magnetic amplifier as in the transductor, but rather at least one period of delay usually accompanied by a time constant before the output responds to a change in the input. The confusion regarding the frequency capabilities of the transductor can be eliminated if the fundamentally different mode of operation compared to that of magnetic amplifiers is understood. On the transductor the current source determines the current flowing in the control winding, whereas in a magnetic amplifier the control currents are functions of the core-exciting current requirements and the voltages present.

Any saturable reactor or magnetic amplifier goes into a transductor mode of operation when driven from a current source. Different features are associated with the various circuits, however. An additional circuit which performs only in the current-driven mode of operation has been invented here at the Laboratory by Windsor.[4] The feature of the Windsor circuit as well as the bridge and center-tapped types of magnetic-amplifier circuits is that the secondary current never changes direction. Without the current reversal that occurs every cycle in the series-connected saturable-reactor circuit (the upper two cores of Fig. 1), the transductor is an order of magnitude less sensitive to stray field. The current reversal every cycle is accompanied by a reversal in the energy stored in the leakage field of the cores. The leakage field is in turn sensitive to external field, and changes in the field can be observed as variations in the widths of the "notches" that occur twice every cycle in the rectified output of cores 1 and 2 in Fig. 1. An extra core is therefore required in the saturable-reactor circuit to provide coupling during the time of the notches, and thereby negate the effects of stray field. All the circuits require a "filtering" reactor in series with the load resistor, and the combination is shunted with an RC. This circuit provides a filter for the square wave caused by the other reactors switching from one side of their B-H loop to the other about the average current. This square wave can be several percent of the dc value and cause high-gain closed-loop systems to saturate. The high-frequency components that exist in the magnet current still appear in the output, however, because the "filtering" reactor is always coupled to the bus. Although the saturable-reactor circuit requires an extra core over the magnetic-amplifier circuit, only half the core area is required for a given dc output voltage, because the cores are effectively in series in terms of volt-second capacity.

The other characteristics of the circuits are essentially identical. The output voltage at greater than half output varies less than ± 0.01% for a ± 10% line-voltage change. The temperature sensitivity is as good as that of the load resistor being used because the very small variations with temperature that occur in the width of the B-H loop are nullified by being above and below

the average value approximately the same length of time each cycle as the core traverses the B-H loop. If high accuracy is required, the effect of line-voltage variations can be eliminated by running the transductor from a high-frequency switching supply utilizing switching transistors and a saturating core, thereby making the volt-seconds available to the transductor constant. Of course, with the higher frequency, the output voltage capabilities of the transductor go up proportionately.

MAGNETIC AMPLIFIER AND TRANSISTOR SYSTEM

Two different systems are in operation on the magnets in the external-beam system. The four plunged magnets inside the vacuum tank are each supplied by a magnetic-amplifier-controlled power supply with a bank of transistors connected across the magnet for fast incremental transient response. The three magnets immediately outside the vacuum tank and the ten beam-transport magnets are supplied by SCR power supplies. Both systems monitor the magnet current with a transductor. This current signal is then compared to the desired response and amplified to drive either the shunt-transistor bank or the firing circuit of the SCR power supply.

Transductor signals from each of the EPB systems are monitored by two sample and hold circuits with two digital voltmeters for readout. Each monitoring channel can be switched to any of the magnet-current positions or beam-energy readout. Any of the pulses available from the Bevatron current marker system can be used for triggering the sample-and-hold units. Four significant figures are displayed by the digital voltmeters for accurate determination of pulse-to-pulse repeatability. The dynamic responses and velocity and position errors of the various systems are monitored with oscilloscopes.

When the four internal magnet systems were specified, the state-of-the-art in SCR power supplies was such that magnetic-amplifier power supplies looked better than a development program in the SCR field. In addition to the newness of SCR's it was also felt that a fast vernier control would still be required with the SCR supplies, and therefore nothing would be gained over the magnetic-amplifier system except a smaller vernier. The vernier or incremental control is necessary in the magnetic-amplifier system to meet the specifications because of the time delay associated with the response of the magnetic amplifier.

The configuration of the fast incremental-control transistor bank and the magnetic-amplifier system is shown in Fig. 2. Placing the transistors in parallel with the magnet accomplishes incremental control of the magnet current by shunting a percentage of the total current around the magnet. This is in contrast to the more conventional series-transistor configuration, where the transistors must carry the total magnet current and exercise control by absorbing part of the applied voltage. In either case, each transistor on the water-cooled heat sink can dissipate 50 W continuously and 150 W for short periods with a conservative life expectancy. There are 1000 2N174 transistors mounted on water-cooled heat sinks in the four EPB systems.

The maximum current-carrying capacity often determines the number of transistors required in the series connection rather than the total power to

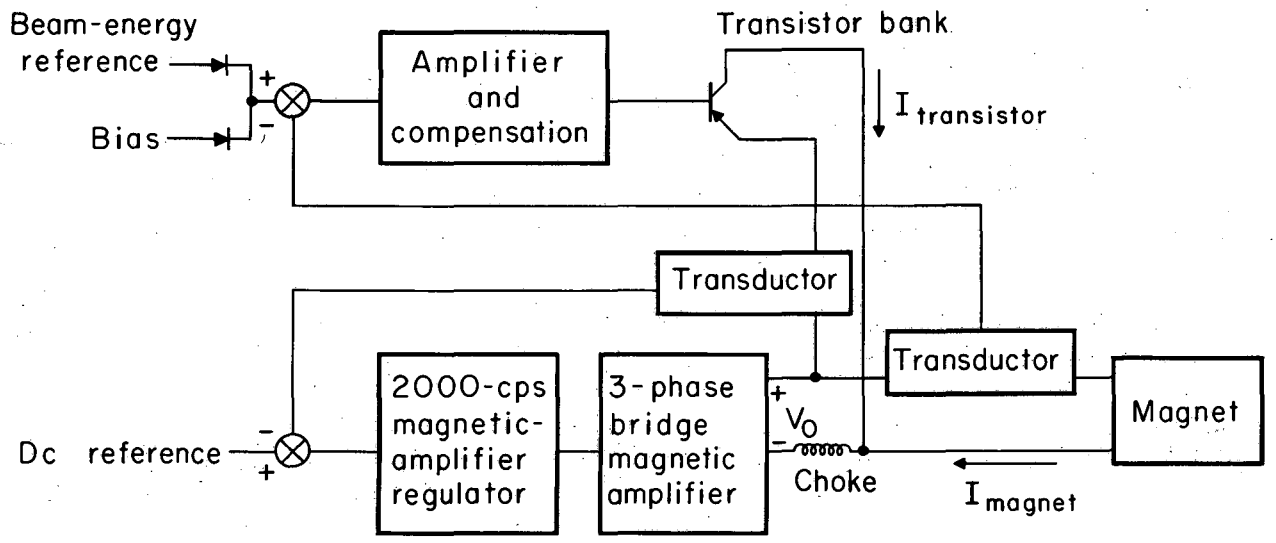

MUB-5243

Fig. 2. One-line and schematic diagram of the magnetic-amplifier and transistor system used for each of the external-beam magnets M1, Q1, M2, and Q2.

be dissipated. The shunt transistors also act as a ripple filter in conjunction with the inductor in series with the main power supply, eliminating the complex pole pair associated with the L-C network which is necessary with the series connection.

The beam-energy reference is applied to one input of the differential amplifier which drives the shunt-transistor bank and the magnet-current feedback signal is applied to the other input. If the magnet current is greater than the reference, the transistors shunt more current around the magnet. This change in transistor current is sensed by another transductor which is compared to a dc reference. The error signal is amplified by the 2 kc magnetic-amplifier regulator and controls the three-phase bridge magnetic-amplifier power supply. As the transistor current increases, the power supply output decreases until a new operating point satisfying both loops is achieved. Because the beam-energy signal goes to zero after each pulse and the dc transistor-current reference does not change, the amplifier saturates between pulses unless an additional reference signal is added that will satisfy both loops simultaneously.

The transfer function derived is

$$GH_{overall} = GH_{transistor}\left(\frac{GH_{mag.ampl.}}{Z_{choke}} + 1\right)\frac{Z_{choke}}{Z_{choke} + Z_{magnet}} . \quad (3)$$

The term in parenthesis is one plus the magnetic-amplifier loop because of the parallel-feed forward paths from the magnet-current error signal back to the magnet current.

The loop gain is the product of the transistor and magnetic-amplifier loops at low frequencies and just the transistor-loop gain at high frequencies. Physically this change in the loop operation occurs as the magnetic-amplifier loop rolls off and the impedance of the series inductance becomes greater with increasing frequency, allowing high-frequency variations in transistor current to cause identical changes in magnet current. The loop zero-decibel crossover frequency is 8 kc/sec; the dc loop gain, and therefore K_p is 10 000, and K_v is 20 000.

The transistor amplifier is similar to that used in the SCR supplies and is described later. The magnetic-amplifier actuator and compensation are similar to the units previously described.

SILICON CONTROLLED RECTIFIER POWER SUPPLIES

A block diagram of the SCR power-supply system used in both experimental and EPB applications is shown in Fig. 3. The magnet current signal from the transductor is compared with the reference and the error amplified and compensated by a differential amplifier. The amplifier drives the SCR firing circuit which controls the output of the power supply. In some applications the power-supply output must be filtered to reduce the magnet current ripple to less than 0.1%. There are twenty-one 105-kW SCR supplies rated 75 V, 1400 A dc, and eight 196-kW supplies rated at 140 V, 1400 A, in operation at the Bevatron. One of the 196-kW supplies is shown in Fig. 4. There

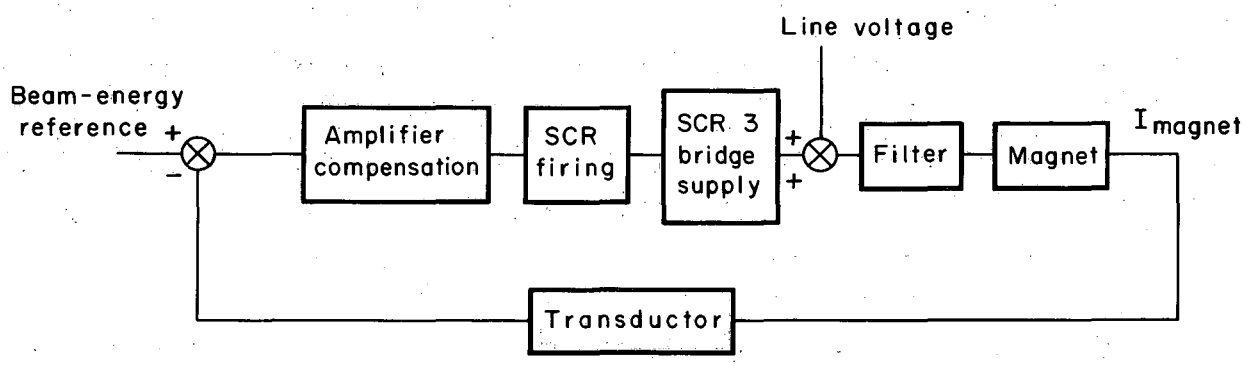

MUB-5244

Fig. 3. Block diagram of the SCR power-supply system.

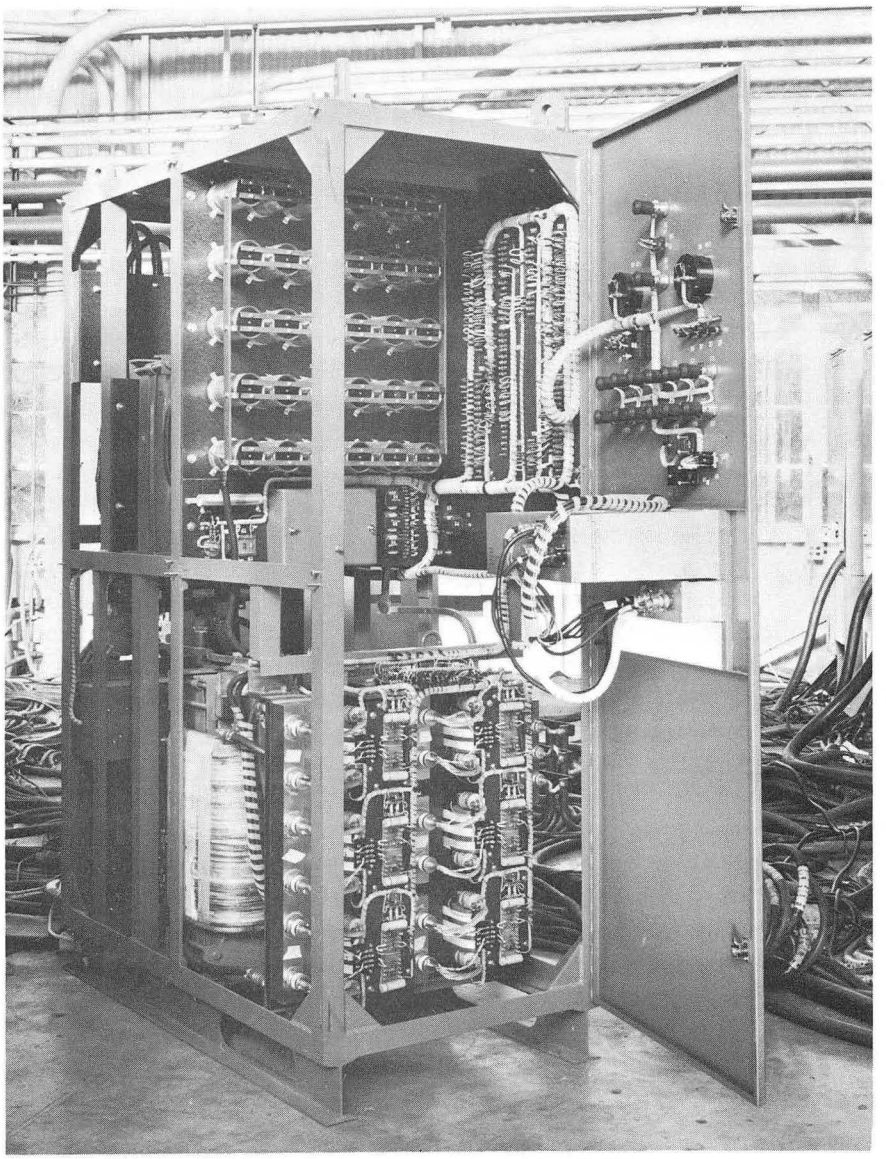

ZN-4683

Fig. 4. The 196-KW SCR power supply.

are now 13 SCR supplies in the EPB system beyond the four magnetic-amplifier transistor units. We plan to control future units by using SCR's. The type of control in the SCR supply is identical to that provided by the magnetic amplifier in that the SCR acts as a switch which is a very high impedance until it is fired, at which time it becomes a low impedance in series with the supply voltage. An additional component in the SCR system is the firing circuit which converts the dc average output of the controlling amplifier into firing pulses that fire the SCR's at an appropriate time in the cycle.

The firing circuits must be synchronized with the phase voltage of each particular SCR in the circuit. The commonly employed mode of control is a dc signal combined with the appropriately phased sinusoidal voltage which fires the SCR at the appropriate time in the cycle. The firing circuit we have employed utilizes a ramp wave shape rather than a sine wave. The circuit is shown in Fig. 5. The phase voltage is converted to a ramp across capacitors C3 and C4 by first converting the voltage into a square wave of current with a full-wave-bridge--choke arrangement. The diodes across C3 and C4 provide the necessary current return path to prevent the capacitors charging in the wrong sense during their reset half cycle. The choke-capacitor arrangement provides essentially complete isolation for the ac line voltage. This isolation means that none of the line-voltage perturbations caused by many switching-type supplies loading the line come through into the firing circuits. The SCR's SCR2 and SCR3 fire on alternate half cycles when the appropriate capacitor voltage exceeds the control amplifier voltage. A capacitor (C1 or C2) then discharges into a pulse transformer, which in turn fires the power SCR's (SCR1 or 4) of that phase.

Some types of sine-wave plus dc firing circuits phase the sine wave in such a way that there is an effective loop gain of approximately 10 opposing line voltage changes. The bandwidth of the current loop in the SCR systems was determined to be sufficient to keep any perturbations in the current due to line-voltage changes within the required specifications of $\pm 0.1\%$, allowing the ramp circuit to be used. The ramp-type firing circuit turns the power supply on when there is no output from the regulator. When the regulator is putting out a dc voltage of 25 V (equal to the peak voltage of the triangular wave developed across the capacitor) the firing pulse is phased back 180 deg. Only 120 deg of phase-back is required to turn-off a power supply with a diode across the output, so the amplifier output is limited to 17 V. For inverting operation, the free-wheeling diodes on the output of the supply are removed, and the amplifier output is reconnected for 25 V operation. When the SCR in the firing circuit is gated, capacitor C2 discharges through the primary winding of the pulse transformer, whose secondary in turn is connected to the firing circuit of the large power SCR's. The firing circuits used in these supplies are capable of driving six of the large 235 A rms SCR's with a firing-pulse peak voltage of 13 V.

Because the firing circuit compare the voltage buildup across a capacitor with the output of an amplifier, any noise present in the amplified signal can cause jitter in the firing angle. If the amplifier could perform only as a low pass network with no gain at the 360 cps current ripple frequency and beyond there would be no problems. To design the overall system with the maximum possible bandwidth, however, requires that the amplifier contribute

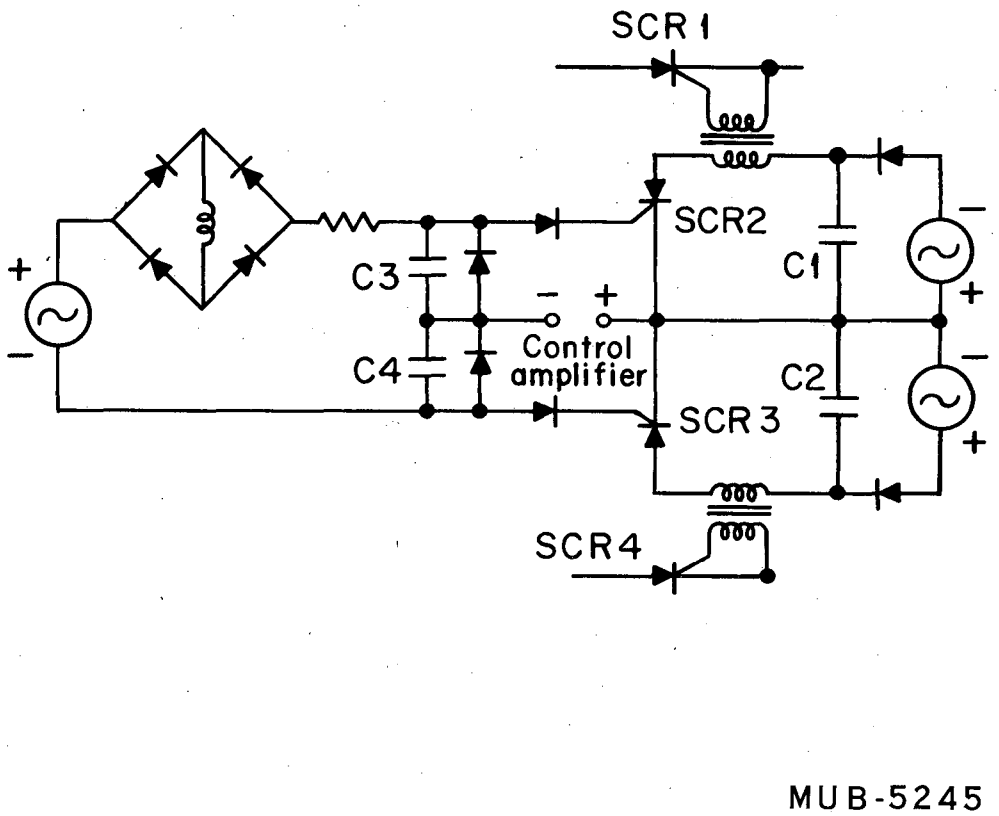

Fig. 5. Firing circuit used in SCR power supplies.

very little phase lag at frequencies below a few kilocycles per second. The phase shift due to the pole-zero compensation has returned to a minimum at lower frequencies, and the lead network to compensate for the filter on the power supply output contributes gain and leading phase. The system must be arranged so that the gain at high frequencies from the magnet current to the output of the amplifier is not too great. Otherwise the amplifier output saturates on the amplified ripple current signal or causes jitter in the firing circuit. In the existing SCR system the ripple component in the output of the amplifier is one or two volts out of the 25-V range.

The operational amplifier used to drive the three firing circuits is a Burr-Brown type 1605 differential amplifier with single-ended output which is capable of ± 15V output at a peak current of 100 mA. For this application the positive supply voltage is set at 20V and the negative supply voltage at 16V, so that the output of the supply with respect to common varies from 0 to ± 17V. The output is prevented from going negative by a diode across the output. Being able to achieve zero volts out of the amplifier is important if full output of the three-phase full-wave supply is desired. The amplifier output impedance must be low to allow the necessary firing current to flow through the SCR at the instant the capacitor voltage equals the sum of the dc voltage developed by the amplifier and the diode and SCR junction voltages. The amplifier acts as a biasing voltage source with no current drain until the SCR fires, and then the current which has been charging the capacitor flows through the amplifier output circuit because the capacitor voltage is clamped to the amplifier voltage. The average current is therefore a function of the firing angle.

The input to the 1605 amplifier is differential as are the two following stages. The reference dc signal and transductor feedback signal are summed on the opposite sides of the differential amplifier. This eliminates any common mode signal that affects both signals. However, summing them on one side of the amplifier with the other side tied to ground would allow a larger reference and transductor signal to be used if desired with very little degradation of the signal. The predominate reason for the differential input pair and succeeding stages is to equalize the temperature drifts of the transistors. The Burr-Brown unit is rated as less than 25 μV/°C, referred to the front end. Our tests show that the average units runs around 10 μV/°C. For 10 to 20°C ambient temperature variations, this thermal drift is well within specifications where the maximum transductor voltage is 4V. Other pertinent specifications of the Burr-Brown amplifier are that open-loop dc voltage gain is approximately 86 db or 30 000. The 3-db point of the amplifier operating as a unity-gain amplifier is 100 kC for both inverting and noninverting operation. The stability for this unity-gain operation is achieved by having pole-zero configurations in both the first- and second-stage differential collectors. For operation in the closed-loop current regulator, the second compensation was removed completely, and the first pole was moved out substantially. For the amplifier loop gain used in the regulator mode of operation, this compensation is quite satisfactory. The amplifier also had to be modified for operation at supply levels higher than ± 15 V because, when operating at a total of 36V, the current clamp on the output is larger than the amplifiers are capable of providing. The correct operating limits were established by modifying the biasing resistors of the two output stages. It was necessary to make sure the current-limiting point was well above the maximum level of the

current source of the firing circuit, which is around 70 mA, otherwise distortion would appear on the output voltage.

These regulators have the same operating controls that were provided on the magnetic amplifier regulators, i.e., current control, remote voltage control, and local voltage control. When operating in remote and local voltage control, the loop is closed around the amplifier itself and the compensation on the first collector stage is accordingly readjusted to stabilize the feedback loop. The voltage control biases the main power supply by controlling the firing point with either the local potentiometer or the remote helipot. The other adjustment on the regulator is a variable resistor in feedback which determines the high-frequency gain of the device. The value of this feedback resistor depends on the inductance of the magnet that a given supply is operating, which varies from 22 to 2500 kΩ for magnet inductances that vary from 1 to 590 mH.

All components of the regulator, transductor power supply, and firing circuits are packaged in a printed circuit board bin (see Fig. 6). The transductor power supply and the ± dc supplies are together in one enlarged circuit-board package, the amplifier and compensation circuitry are mounted on a second printed-circuit-board package, and the three firing circuit boards occupy the remainder of the bin. The pulse transformers which take the signals to the large SCR's are mounted adjacent to the power SCR's to eliminate the possibility of feeding-back the high powered dc connections of the power supply into the printed-circuit-board bin.

To distribute the firing pulses from the pulse transformer to the various sets of three parallel SCR's, a distribution board is used for each group of SCR's. A resistor-capacitor combination in each gate is used to enhance the signal to noise ratio. A diode must be placed in each lead returning from the cathode to avoid shorting out the current balancing reactors in the cathodes. In the group of 21 supplies recently put into operation, a few SCR's out of the 378 total misfired on the noise signal caused by an adjacent-phase SCR firing. The problem could be eliminated by placing a silicon diode in series with the gate lead, as most pickup occurs in the loop formed by the common-cathode firing connection through the current-balancing reactors to the main common-cathode point. This problem could also be avoided by firing each SCR from a separate pulse transformer secondary.

A separate chassis is provided in each power supply to allow the supplies to be paralleled. One of the two supplies is arbitrarily designated the master supply, and the firing pulses from the firing circuits in this supply are fed to the SCR pulse transformers in both units. The amplifier of this master supply senses a transductor signal which is the parallel combination with both the master and slave units. Since the transductor is basically a current transformer, this arrangement can be regarded as the paralleling of two current transformers across half of the transductor resistance that is normally used in the circuit. The interconnections between the two supplies are accomplished through one bundle of cables.

The firing pulses rather than the amplified error signal at the output of the amplifier are used to transmit firing information because the noise adjacent to the supplies has a high content of pulses. Because of the limited

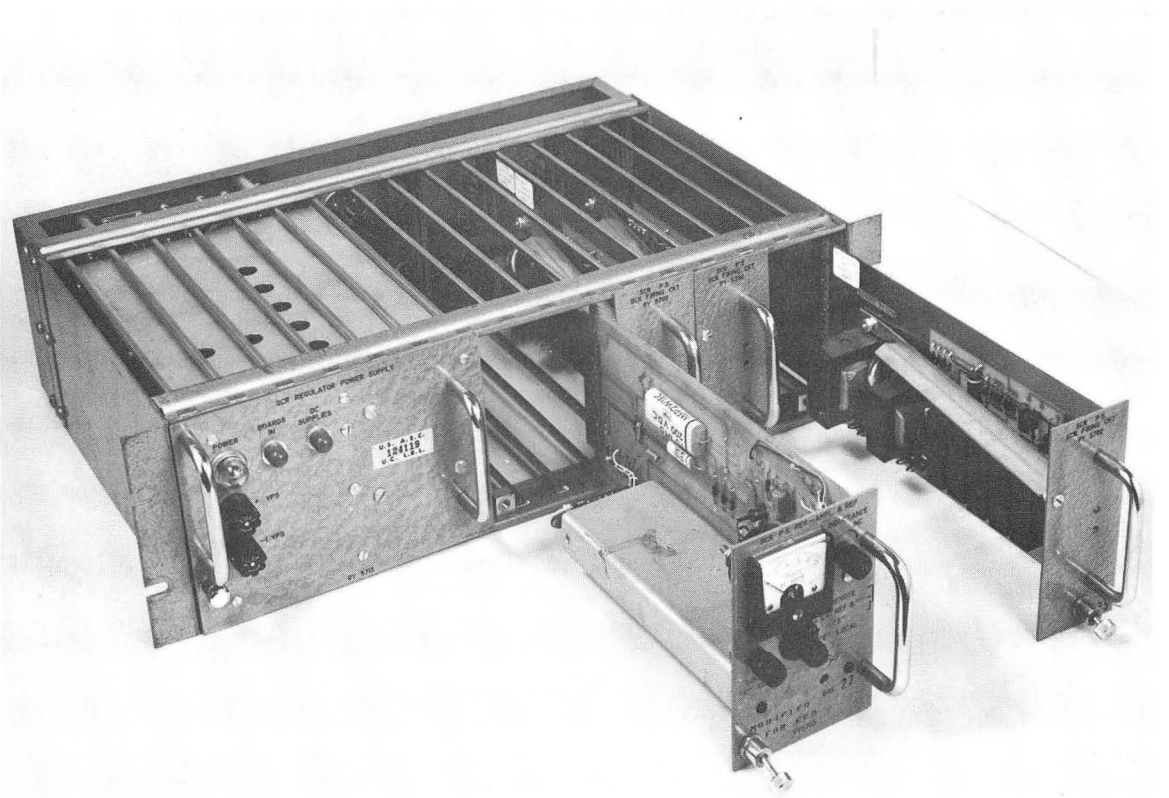

ZN-4684

Fig. 6. Control bin for SCR power-supply system.

bandwidth of the amplifier, these pulses would appear on top of the error signal where small changes cause large variations in the time of firing. By transmitting a relatively large firing pulse (12 V) the signal-to-noise ratio is far better and can be improved additionally by adding a diode at each SCR gate.

A filter is required on the output of the experimental SCR supplies as they are planned to be used predominately with the Brookhaven laminated quadrupoles, some of which have an inductance as low as 1 mH compared to a resistance of 0.024Ω for a filter factor of 100 at 360 cps. As the additional reduction in ripple current required is only approximately 10 times, the filter used is an LCR combination shown in the Fig. 7.

The corner frequency of this network is 36 cps, and it behaves essentially as a single time constant to give a 10-to-1 reduction of the 360-cps ripple without the corresponding power loss of an RC. An additional advantage of this LCR over an LC network for just ten times filtering, is the relative ease of compensation in the feedback network around the amplifier. The transfer function of the filter is

$$\frac{E_0}{E_i} = \frac{S + \omega_0}{\omega_0 (S^2 + \omega_0 S + \omega_0^2)}$$

where $\omega_0 = 2\pi$ (36 cps). A lead network from 36 to 360 cps is adequate compensation for this network and is incorporated in the feedback network around the amplifier. The dc gain of the system varies from 2000 to 10 000, depending on the magnet resistance, and the closing frequency is approximately 120 cps. The velocity constant, K_v, is approximately 1000.

CONCLUSIONS

The SCR power supply has eliminated the magnetic amplifier from consideration in almost all applications. The obvious exception is where noise is a problem and weight and speed of response are not considerations. At manufacturing costs of around $50 per kilowatt, the SCR supplies are less expensive than magnetic amplifier units. The amplifier, transductor, and firing-circuit package to complete the system cost less than $1000.

The phase-back aspect of pulse-width-modulation causes problems in power factor and required power on the ac supply system. Studies are underway to find the best compromise between operating flexibility in the experimental physics program and minimum power and equipment costs. A possible solution would be multiple high-frequency dc switching supplies running from large three-phase bridge-rectifier supplies. Magnets associated with a given experiment are located in groups, each of which could be supplied from one three-phase bridge supply and a number of associated dc switching supplies. This "family" arrangement would seemingly eliminate the power-factor problem and still provide the required flexibility of a wide range of output voltage for each magnet.

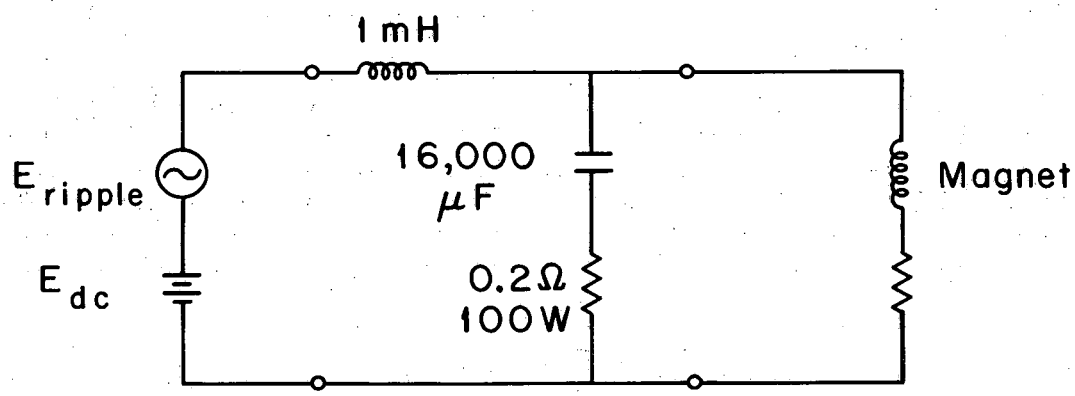

MUB-5246

Fig. 7. LCR filter network.

ACKNOWLEDGMENTS

Acknowledgment is due members of the Bevatron Electronics Engineering staff who have contributed to this program in addition to their other responsibilities. Alfred Windsor has brought the transductor to fruition as a useful high-performance device, Pierre Pellissier contributed in the specification of the SCR supplies and the mechanical design of the transistor banks, Thomas Sibary developed the firing circuit, and Henry Lancaster contributed to the analysis of the system.

This work was done under the auspices of the U. S. Atomic Energy Commission.

REFERENCES

1. G. J. Murphy and F. R. Delfled, IRE Trans. Auto. Control 6, 283 (1961).

2. J. C. Truxal, Control System Synthesis (McGraw-Hill, New York, 1955).

3. L. T. Jackson, An Instability in Three-Phase Magnetic-Amplifier Operation (M. S. Thesis), Lawrence Radiation Laboratory Report UCRL-10855, June 1963.

4. A. A. Windsor, A D-C Transformer With Low Noise and Wide Frequency Response, Lawrence Radiation Laboratory Report UCRL-10473, September 1962.

5. H. C. Bourne, Magnetic Circuits (California Book Co., Ltd., Berkeley, California, 1961).

This report was prepared as an account of Government sponsored work. Neither the United States, nor the Commission, nor any person acting on behalf of the Commission:

A. Makes any warranty or representation, expressed or implied, with respect to the accuracy, completeness, or usefulness of the information contained in this report, or that the use of any information, apparatus, method, or process disclosed in this report may not infringe privately owned rights; or

B. Assumes any liabilities with respect to the use of, or for damages resulting from the use of any information, apparatus, method, or process disclosed in this report.

As used in the above, "person acting on behalf of the Commission" includes any employee or contractor of the Commission, or employee of such contractor, to the extent that such employee or contractor of the Commission, or employee of such contractor prepares, disseminates, or provides access to, any information pursuant to his employment or contract with the Commission, or his employment with such contractor.