UCRL- 1244 REV

SECRET

DECLASSIFIED

UNIVERSITY OF CALIFORNIA — BERKELEY

TWO-WEEK LOAN COPY

This is a Library Circulating Copy
which may be borrowed for two weeks.
For a personal retention copy, call
Tech. Info. Division, Ext. 5545

RADIATION LABORATORY

UCRL-1244 Rev.
c.2

DISCLAIMER

This document was prepared as an account of work sponsored by the United States Government. While this document is believed to contain correct information, neither the United States Government nor any agency thereof, nor the Regents of the University of California, nor any of their employees, makes any warranty, express or implied, or assumes any legal responsibility for the accuracy, completeness, or usefulness of any information, apparatus, product, or process disclosed, or represents that its use would not infringe privately owned rights. Reference herein to any specific commercial product, process, or service by its trade name, trademark, manufacturer, or otherwise, does not necessarily constitute or imply its endorsement, recommendation, or favoring by the United States Government or any agency thereof, or the Regents of the University of California. The views and opinions of authors expressed herein do not necessarily state or reflect those of the United States Government or any agency thereof or the Regents of the University of California.

UNIVERSITY OF CALIFORNIA
Radiation Laboratory Inventoried MAY 2 0 1953

UCRL-1244 REV.

Cover Sheet
Do not remove

INDEX NO. _____
This document contains 43 pages
This is copy 76 of 99 series A

DECLASSIFIED

Issued to Info. Division

~~SECRET~~
Classification

Each person who receives this document must sign the cover sheet in the space below.

Route to	Noted by	Date	Route to	Noted by	Date
D.N.J.	DNJ	9/25/52			
J.R.D	J. Donaldson	9/20/52			
[illegible]	[illegible]	9/21/53			
SGZ	S Zaso	7/7/52			
~~REN~~					
RHG	RHG	10-12-53			
WHH	WHH				
~~[illegible]~~					
~~F. Bjorkland~~					
JWF	JWF	11/20/52			
AES	A.E.S.	10/27			
Bjorkland	F E B	12/17/53			
UCRL LIVERMORE	(long loan)				
Jim Mattingly	J Mattingly	10-28-55			

I-5(M)

SECRET

DECLASSIFIED

UCRL-1244 Rev.
Physics-Fission

UNIVERSITY OF CALIFORNIA

Radiation Laboratory

Contract No. W-7405-eng-48

CLASSIFICATION CANCELLED
BY AUTHORITY OF THE DECLASSIFICATION BRANCH USAEC per Crash List #7.
BY B Forbett 3-30-57
SIGNATURE OF THE PERSON MAKING THE CHANGE DATE

THE RANGES OF FRAGMENTS FROM HIGH ENERGY FISSION OF URANIUM

E. M. Douthett and D. H. Templeton

July 23, 1951

CAUTION

This document contains information affecting the National Defense of the United States. Its transmission or the disclosure of its contents in any manner to an unauthorized person is prohibited and may result in severe criminal penalties under applicable Federal laws.

Berkeley, California

SECRET

DECLASSIFIED

Standard Distribution: Series A	Copy Numbers
Aircraft Nuclear Propulsion Project, Oak Ridge	1-2
Argonne National Laboratory	3-14
Armed Forces Special Weapons Project	15
Atomic Energy Commission, Washington	16-21
Brookhaven National Laboratory	22-25
Bureau of Ships	26
Carbide & Carbon Chemicals Company (K-25 Plant)	27-28
Carbide & Carbon Chemicals Company (Y-12 Area)	29-30
Chicago Patent Group	31
Chief of Naval Research	32
Columbia University (Havens)	33
duPont Company	34-37
General Electric Company, Richland	38-41
Hanford Operations Office	42
Idaho Operations Office	43-44
Iowa State College	45
Knolls Atomic Power Laboratory	46-49
Los Alamos	50-52
Mound Laboratory	53-54
National Advisory Committee for Aeronautics	55
Naval Research Laboratory	56
New York Operations Office	57-58
North American Aviation Inc.	59-61
Oak Ridge National Laboratory (X-10)	62-69
Patent Branch, Washington	70
Savannah River Operations Office	71
UCLA Medical Research Laboratory (Warren)	72
USAF - Headquarters	73
U. S. Naval Radiological Defense Laboratory	74
University of California Radiation Laboratory	75-77
Westinghouse Electric Corporation	78-81
Wright-Patterson Air Force Base	82-84
Technical Information Service, Oak Ridge	85-99
Total	99

Information Division
Radiation Laboratory
Univ. of California
Berkeley, California

SECRET

DECLASSIFIED

THE RANGES OF FRAGMENTS FROM HIGH ENERGY FISSION OF URANIUM

E. M. Douthett and D. H. Templeton

DECLASSIFIED

THE RANGES OF FRAGMENTS FROM HIGH ENERGY FISSION OF URANIUM

E. M. Douthett and D. H. Templeton
Department of Chemistry and Radiation Laboratory
University of California, Berkeley, California

July 23, 1951

ABSTRACT

The ranges in aluminum of several fragments from the fission of U^{238} induced by 18 Mev deuterons and by 335 Mev protons have been measured by a radiochemical method. The ranges found are of the same order of magnitude as those reported for slow neutron induced fission. The difference in the forward and backward recoil ranges in the deuteron case is consistent with the momentum corresponding to compound nucleus formation. The ranges found in the proton case are shorter than those of the deuteron case, the differences being greater for the lighter fragments. These differences are explained by the change in mass of the complementary fragments, due to evaporation of neutrons prior to fission in the proton case, which causes the observed fragment to receive a smaller fraction of the total kinetic energy.

DECLASSIFIED

THE RANGES OF FRAGMENTS FROM HIGH ENERGY FISSION OF URANIUM

E. M. Douthett and D. H. Templeton
Department of Chemistry and Radiation Laboratory
University of California, Berkeley, California

July 23, 1951

I. INTRODUCTION

The ranges associated with the fission fragments from slow neutron fission have been studied by a number of experimenters. This work is adequately reviewed by Katcoff, Miskel, and Stanley[1] who themselves have made an extensive study of the ranges in air of the fragments from plutonium fission. The characteristics of this range study have been found to be consistent with the kinetic energy distribution of the fission fragments as determined by ionization chamber measurements.[2] In the field of high energy fission, Jungerman and Wright[3] have studied the kinetic energies of fission fragments produced by 45 Mev and 90 Mev neutrons. No range measurements for high energy fission have been reported. Such range measurements were undertaken by a radiochemical method because it makes possible the independent study of fragments of various identities. Because the production of sufficient radioactivity was a problem, the experiments were restricted to fission induced by charged particles. Originally 18 Mev deuterons were used, because of the high beam currents available. An improved technique made possible experiments with 335 Mev protons.

II. EXPERIMENTAL METHOD

Fission was induced in a thin uranium source by 18 Mev deuterons and 335 Mev protons in the 60-inch and 184-inch Berkeley cyclotrons. Adjacent to this source during the irradiation was a stack of aluminum foils. After the irradiation, the relative amount of a certain radioactive fission product in each foil was determined by radiochemical methods. From these data and the known thicknesses of the foils, the mean range of that particular kind of the fission fragment was calculated.

The geometrical arrangement is indicated in Figure 1. If the fission recoils are isotropic, half of them will enter the stack of aluminum foils. Those with a given range R leaving any one point of the source will be deposited on a hemispherical surface of radius R. A foil of thickness t in the stack will then contain recoils deposited on a zone of the sphere, and since the zone has an area of $2\pi Rt$, the activity from a given recoil fragment of range R in the foil will be proportional to the thickness of that foil. This will be true for each foil out to a distance from the source equal to the range. It follows that the same will be true for all points of the source, and therefore for the whole source, if the absorbers are sufficiently larger than the area of the source. Because of straggling and the finite thickness of the source, the observed curve of activity per unit foil thickness plotted against distance from the source is of the type shown in Figure 1 instead of being a perfect step function.

The first experiments were made with stacks of many very thin foils, as had been done previously (for low energy neutron fission) by Joliot,[4] Suzor,[5] and Finkle and co-workers.[6] The aluminum foils were a commercial grade of hammered aluminum, purchased in sheets 5 1/4 inch x 5 1/4 inch with thickness close to 0.2 mg/cm^2. However, it was found that even the best of these foils varied in thickness so much from point to point that high accuracy was impossible. The probable errors of the ranges calculated from these experiments were estimated as 5 percent based on the internal consistency of the data. These results confirmed that the activity distribution in this experimental arrangement is approximately as shown in Figure 1, in agreement with the results of the previous workers.[4,5,6]

More consistent results were obtained with a thick foil technique. One can select the foil thickness so that the given fission recoil is completely stopped in just two foils, as indicated in Figure 2. Let A_n and t_n be the activity and thickness of the nth foil and a and a_0 the activities per unit thickness of absorber at distances x and 0. The arithmetic mean range is

$$R = \frac{\int_0^{a_0} x \, da}{a_0}$$

If the region of straggling does not include the first foil, then a_0 is equal to A_1/t_1; the integral is the total activity A_1 plus A_2; and

$$R = (1 + A_2/A_1)t_1$$

This result is independent of the shape of the activity distribution in the second foil. If the activity extends to a third foil, A_3 is added to A_2 in the above expression.

In the above discussion, it has been assumed that the foils are in contact with each other during the irradiation. However, the results are valid so long as the foils are parallel and sufficiently large so that every recoil particle remains in the stack.

Eight experiments, listed in Table I, were carried out by the "thick foil" method.

Table I

Details of Irradiation Conditions

Bombardment	Projectile	Quantity of irradiation (μah)	Recoil direction[a]	Source thickness (mg/cm^2)
1	335 Mev p	2	90°	1.101
2, 3, 4, 5	335 Mev p	2	90°	0.920
6	18 Mev d	20	forward	0.920
7	18 Mev d	20	backward	0.920
8	18 Mev d	150	forward	0.055

[a]With respect to the beam direction.

Because the projectile has appreciable momentum, if the fission recoils are isotropic with respect to the excited nucleus they are not isotropic in the laboratory system. However, it can be shown by geometrical

arguments that the method of calculation introduces no error at all if the range of a fragment of a particular mass is proportional to its initial velocity or the square root of its initial energy, so long as the velocity of recoil exceeds the velocity of the fissioning nucleus so that there is some recoil in all directions in the laboratory. This dependence of range on energy for fission fragments in gases is consistent with the experimental measurements and the formula of Bohr.[1,7] To investigate how exactly this condition must be satisfied, we calculated examples using the differences in forward and backward range actually observed in the deuteron experiments and the extreme assumptions that the ranges were proportional to the zero and first powers of the energy. The errors introduced in such cases were of the order of only one percent for forward and backward recoils, and insignificant for perpendicular recoils. Thus we are confident that no appreciable error is introduced into the present results by the asymmetry of recoil.

A. Source Preparation

The sources were prepared by sputtering natural uranium onto a two mil aluminum sheet.[8] The aluminum sheet, cut to the desired shape for target mounting, was masked by a thin bronze masking plate during the sputtering process so as to define accurately the source area. The sputtering was accomplished in a low pressure argon atmosphere with an applied potential of 1500 volts. The average source thickness was determined by weighing the cleaned aluminum sheet before and after the

sputtering process. It was necessary once or twice to spot the sputtering process and weigh the aluminum in order to determine the amount of progress made. During these intervals and after completion of the sputtering process, the uranium was in contact with the air and some UO_2 undoubtedly formed. It must therefore be considered that each source contained unspecified amounts of the oxide.

The sources were thick enough to introduce some uncertainty into the results. The correction for source thickness is discussed in a later section of this paper. It was not convenient to use thinner sources because, even with the thick foil technique, the 335 Mev proton experiments yielded relatively modest amounts of radioactivity in the bombardment times which were available.

B. Foil Thickness Measurements

The "thick" foils were either 0.00033 inch or 0.00025 inch commercial rolled aluminum sheet. In the first three bombardments 0.00033 inch foils, selected from a representative group of 32 foils in all, were used. The thickness in each case was calculated from measurements of the dimensions of a weighed area observed under graph paper over an illuminated viewing plate. A special steel tool, comprised of a hardened ground flat surface of known geometrical shape and with perpendicular sides, was used to estimate the error involved in the thickness measurements. The foil, placed between the tool and a flat plate glass surface, could be accurately trimmed to the known area with a scalpel, and it remained only to weigh the trimmed foil to determine

its thickness. Thirty-two areas, each the same in shape and size as that over which it was expected the fission fragments would be collected during bombardment, were thus trimmed from 21 foils not selected for bombardment work. It was found that the average difference between the thickness so measured and that measured by the graph paper technique (after applying a calibration correction for the graph paper used) was ± 0.3 percent. The maximum difference found in the 32 measurements was 0.53 percent. On this basis the thickness of those foils used for bombardment work was established as that measured by the graph paper technique with an average expected error due to nonuniformity of ± 0.3 percent.

Thickness measurements made by trimming the foils to a known and well defined area were so successful that this method was employed for the 1/4 mil foils which were used in the remaining bombardments. The tools were made rectangular in shape so that the areas could be quite accurately determined from micrometer measurements. Sixty foils were cut from the 1/4 mil aluminum sheet. Each was first trimmed to an area slightly larger than that of the smallest area which could be mounted in the target holder, making possible one measurement of the thickness. Using a second tool, each foil was trimmed again to an area equal to that of the smallest convenient size for target mounting, making possible a second measurement of the thickness. Since the two areas were not far different, it was expected that the two measurements should agree. The average difference between the two over the sixty foils was 0.07 percent. Some of the foils of this group, not selected for

bombardment work, were trimmed again to a small rectangular area equal to that over which it was expected the fission fragments would be collected. This third thickness measurement showed the average expected error due to nonuniformity to be ± 0.2 percent.

The thin foils, mounted adjacent to the source, were all trimmed after bombardment to an area only slightly larger than that over which the fission fragments were expected, and then weighed. It was possible that some activity was lost from the first foil during this operation because of mal-alignment of the trimming tool. However, the thickness measurement was the most important consideration. It is difficult to establish accurately an expected error in this thickness measurement, but an error as large as one percent would produce an uncertainty of only 0.002 mg/cm^2. The arbitrarily chosen value of one percent was a safe estimate.

C. Target Assembly

The target assembly for the 184-inch cyclotron is shown in Figure 3, with the thicknesses of source, spacers and foils greatly exaggerated. The source and the collector foils were spaced apart by 0.002 inch aluminum spacers to facilitate disassembly after the irradiation. The spacers, foils, and source were aligned and held in place by four machine screws which threaded into an aluminum block adapted to the probe of the cyclotron. Vent holes were provided so that the air between the foils could escape when the target was let down to the cyclotron tank pressure. The supporting foil for the source was dished slightly so that uranium

source extended into the circulating beam of the cyclotron, which struck the target almost parallel to the foils. In this arrangement, the range measured corresponds approximately to that of recoils at right angles to the beam. The uranium is disposed so that it is a thick target with respect to the beam and a thin target with respect to the recoils. The effective energy spectrum of the protons therefore extends from 335 Mev down perhaps to very low energies, and the shape of this spectrum is unknown. The thick target was necessary because otherwise insufficient activity would have been obtained in reasonable bombardment times.

The target assembly for the 60-inch cyclotron was substantially the same except that it was mounted with the foils perpendicular to the deflected beam. The foils and source were so thin that they absorbed little power from the deuteron beam. The aluminum backing block, which absorbed most of the power, was water cooled. In this case the target was thin with respect to the beam, and the effective energy of the deuterons was about 18 Mev.

Those recoils which are ejected at an angle sufficiently small with respect to the plane of the source can be stopped in the spacer between the source and the first foil, and presumably there are some which spend only part of their range in this first spacer, being collected in the foil beyond. To avoid an error due to this cause, a thin foil (about 0.2 mg/cm^2) was placed in the first position and the second foil, of the thicker variety, was used as the control foil. The geometry was such that no fission recoil could reach the second spacer without having traversed more than its range in the first thin foil. The ranges were

then calculated from the expression:

$$R = t_1 + t_2(1 + A_3/A_2)$$

This arrangement was used for bombardments 2 - 5, the results of which showed this precaution to be unnecessary. Thereafter the thin foil adjacent to the source was not used.

D. Chemical Procedure

After the irradiation, the target was disassembled. Each foil was placed in an individual test tube and dissolved with 6 M hydrochloric acid. The same amount of mixed carrier solution was added to each test tube, and the samples divided into two nearly equal parts for chemical analysis. When silver carrier was added, it was added separately after the other carriers. The exchange between silver ion and freshly formed silver chloride has been shown to be reasonably fast,[9] and the solutions were thoroughly stirred to effect this exchange. The silver chloride was then separated by centrifuging and the filtrate divided into two nearly equal aliquots. Duplicate samples of the silver were obtained by dissolving the silver chloride with ammonium hydroxide solution, then dividing the solution.

The carriers were separated using qualitative analytical methods and purified by the chemical procedures outlined by Newton.[10] The final precipitate was mounted in a small aluminum dish and weighed (glass or porcelain dishes were used for the silver chloride samples). The dish, covered with a thin piece of Cellophane, was counted with an end windowed, chlorine-argon filled Geiger tube. Since only relative values

of the specific activities were required, no attempt was made to determine absolute disintegration rates.

E. Identification of the Radioactivities

Ba^{140} was identified by its half-life of 12.8 days, and distinguished from 12 day Ba^{131} by the growth of its daughter La^{140}. This growth showed that not enough Ba^{131} was counted under the conditions used to cause any serious error. In bombardments 1, 2, 4, and 5 the barium separation was effected after eight days after the bombardment so that the decay of the 39 hour Ba^{133m} and 29 hour Ba^{135m} would not mask the La^{140} growth. In bombardment 3 the lanthanum growth was obscured, but it was inferred from the other results that the 12.8 day activity could be called Ba^{140}. In the 18 Mev deuteron experiments, not enough of the short-lived barium activities was produced to be of any concern.

The radium spallation products[11] which contaminated the barium samples in the high energy bombardments were taken into account in several ways. In bombardment 1, which utilized the first foil as the control foil, alpha activity was detected only in the two samples from the first foil. The beta activity due to the radium was corrected for by converting the observed alpha counting rate to the equivalent beta counting rate, the equivalence being determined by a suitable radium standard counted in both counters. Radium was separated from the barium samples during the chemistry of bombardment 2 by the use of Dowex resin columns eluted with citrate.[12] Bombardment 3 showed that the ranges of

the radium spallation products were less than the thickness of the "very thin" foil adjacent to the source. Radium contamination in the samples of the thin foil caused no error, because the activities of these samples were not used in the range calculations.

Resolution of the decay curves for the tin samples showed the three half-lives of the 27.5 hour Sn^{121}, 9.5 day Sn^{125}, and 130 day Sn^{123} isotopes.[13-15]

All cadmium samples gave decay curves of the same shape, which could be resolved into two components for the isomers of Cd^{115}. The half-lives observed were 43 days and 53 hours. The reported value of 56 hours[16] is in disagreement. This activity has also been studied by Folger, Stevenson, and Seaborg[17] who report that the half-life is 53 hours.

Ag^{111} was identified by the 7.5 day half-life. In addition, one absorption curve was taken for each proton bombardment, using the most active sample from the control foil, to differentiate it from the 8.6 day Ag^{106}. The absorption curves showed that the radiation counted was predominantly a beta spectrum with a range of 400 mg/cm^2 of beryllium, which corresponds to the radiation of Ag^{111}. The level of radiation counted that could be associated with Ag^{106}, which has an abnormally high ratio of gamma ray counts to electron counts,[18] was of the order of 0.2 percent.

When the 9.7 hour Sr^{91} activity was sought, the final strontium separation was made after 13.5 hours after the end of bombardment so that the 2.7 hour Sr^{92} and its 3.5 hour daughter would not interfere. The

isotope was identified by the 9.7 hour half-life which tailed into the long half-life of from 54 to 61 days. Corrections for the activity of the 54 day Sr^{89} were negligible for the observations used for the range caluclations.

The strontium samples were purified chemically to remove the 61 day Y^{91} daughter of the Sr^{91} after the Sr^{91} had substantially all decayed to permit observation of the decay of 54 day Sr^{89} in all cases but bombardments 6 and 7. In these cases, the range of Sr^{89} was determined from the change in the mean normalized specific activity caused by the change in the relative abundance of the activities.

The activity in the samples from the foils beyond the range of the fragments was so near background level that its decay was confused by statistical fluctuations. However, a low level of Na^{24} contamination was indicated in the Sr^{91} samples.

III. EXPERIMENTAL RESULTS

The observed specific activities of the samples, i.e., counts per minute per milligram of sample, could be used for range calculations since, for a given bombardment, the same amount of inactive carrier had been added to each of the dissolved foils. For a given sample pair, i.e., both from the same foil, half the percentage difference between the two specific activities was recorded each time the pair was counted, and an average of this quantity was taken to be the observed experimental uncertainty, independent of the statistical counting error. Included in this were errors due to chemistry, differences in self-absorption,

self-scattering and back scattering, and small differences in counting geometry.

The sum of the two specific activities of an identical pair was divided by that of the control foil in each case and recorded as the normalized specific activity of that foil. For a given isotope investigation, the samples from all foils decayed with the same half-life so that this normalized specific activity remained a constant figure except for the statistical variation. The error due to fluctuations in counter sensitivity and to statistics was estimated from this variation. Small corrections were made whenever necessary for the decay in the time between the counting of the various samples.

Table II lists the mean normalized specific activities determined as described above for one experiment. The error shown in each case is the combined observed uncertainty, estimated from the data, due to the errors mentioned above. As shown, each isotope investigation included an examination of a least one foil beyond the end of the range. The normalized specific activity found in this foil was in <u>every</u> case less than one percent. In some cases, however, its magnitude was comparable to the observed error in the other foils. For the sake of consistency, this correction was subtracted in all cases before substitution into the equation, although generally it contributed little to the accuracy of the measurement.

The mean ranges calculated from these data using those formulas already developed are listed in Tables III and IV. Because of the straggling effect near the end of the range, these formulas are not valid if the end

Table II

Data from Bombardment No. 4

Target detail

Source	0.920 mg U/cm^2
Foil No. 1	0.218 mg Al/cm^2 ± 1.0%
Foil No. 2 (control foil)	1.7100 mg Al/cm^2 ± 0.2%
Foil No. 3	1.7099 " "
Foil No. 4	1.7150 " "
Foil No. 5	1.7078 " "

Observed mean normalized specific activity

Isotope Studied	Foil No. 1	Foil No. 2	Foil No. 3	Foil No. 4	Foil No. 5
Ba^{140}	0.1200±.0015	1.000±.0017	0.4078±.0035	0.0008±.0007	0.0008±.0007
$Sn^{123,125}$	0.1052±.0031	1.000±.024	0.4877±.0094	0.0021±.0005	0.0002±.0001
Cd^{115}	0.1254±.0023	1.000±.0024	0.6231±.0041	0.0045±.0007	0.0004±.0001
Ag^{111}	0.1382±.0027	1.000±.0089	0.659±.010	0.0074±.0004	0.0001±.0000
Sr^{91}	0.1219±.0007	1.000±.014	0.9066±.0046	0.0972±.0013	0.0047±.0005*
Sr^{89}	0.1296±.0008	1.000±.0027	0.8899±.0035	0.1038±.0012	0.0013±.0013

*Na^{24} contamination probable.

Table III

Experiments with 335 Mev Protons

Bombardment	Sr^{89}	Sr^{91}	Ag^{111}	Cd^{115}	$Sn^{123,125}$	Ba^{140}
	Uncorrected mean range					
1		3.52±.03				2.67±.04
2	3.66±.03	3.63±.04	3.11±.04			2.80±.03[a]
3	3.66±.06	3.72±.23[b]	3.12±.02			2.82±.01[a]
4	3.62±.02	3.65±.03	3.07±.03	3.00±.01	2.76±.05	2.62±.01
5	3.63±.02		3.04±.03	2.99±.04	2.85±.04	2.64±.03
	Mean range corrected for straggling					
1						2.53±.04
2			3.08±.04			
3			3.08±.02			
	Weighted averages, bombardments 2-5[c]					
	3.63±.01	3.63±.02	3.07±.01	3.00±.01	2.82±.03	2.63±.01

[a]Used to estimate straggling, and not included in weighted average.

[b]Larger error due to chemistry.

[c]Uncorrected for source thickness.

Table IV

Experiments with 18 Mev Deuterons

Bombardment	Uncorrected mean range			
	Sr^{89}	Sr^{91}	Ag^{111}	Ba^{140}
6	4.05±.03	3.99±.02	3.38±.04	2.91±.02
7	3.71±.03	3.66±.02	3.06±.05	2.54±.01
8	4.40±.04		3.76±.04	3.26±.02

of the control foil lies near the mean range. This effect explains why the ranges caluclated for Ba^{140} in bombardments 2 and 3 are greater than those of bombardments 4 and 5.

It is possible to make some deductions concerning the magnitude of the straggling from these data. If a tangent is drawn to the activity distribution curve (Figure 2) at its steepest point, it intersects the distance axis at the extrapolated range. We define the straggling parameter as the difference between the mean range and the extrapolated range. If it is assumed that the shape of the activity distribution curve is that of an integrated Gauss error curve, then the straggling parameter can be adjusted to fit the observed data. In the case of Ba^{140}, the parameter was adjusted to make the data of bombardments 2 and 3 consistent with the weighted average of the ranges from bombardments 4 and 5. Similar estimates were made using the data from bombardments 4 and 5 in the case of those longer ranged fragments which penetrated appreciably

into the fourth foil. The activity distributions in the deuteron experiments allowed a single estimate of the straggling parameter of Ag^{111}. The resulting parameters, listed in Table V, are rather sensitive to errors in range and in observed activity ratios. For example, a one percent uncertainty in the mean range combined with a one percent uncertainty in the ratio of observed activities results in an eight percent uncertainty in the estimated straggling. The assumption that the shape of the activity distribution curve is Gaussian is not critical. These parameters include the effect of the source and are not to be confused with the straggling of recoils from a thin source.

The data for barium and strontium show that for the conditions of bombardments 2-5 the straggling parameter is 15 ± 1 percent of the uncorrected mean range for both heavy and light fragments. If this value is used for all fragments, then the values for Ag^{111} from bombardments 2 and 3 are lowered about one percent. The only other case which requires this correction is that of Ba^{140} in bombardment 1. A parameter of 0.47 mg/cm^2 Al was used, on the basis that the thickness of the source is largely responsible for the straggling in this case. The values for Ba^{140} from bombardments 2 and 3 are not corrected, nor are they included in the average, because they were used to estimate the straggling parameters.

A difference between the range of Sn^{123} and Sn^{125} was not distinguishable. In this case, since both isotopes are present in the same samples, a difference in range would be indicated by a gradual shift in the value for the normalized specific activity of those samples taken

Table V

Straggling Parameters

Bombardment	Fragment	Straggling Parameter (mg/cm^2 Al)	(percent[a])
2	Ba^{140}	0.38	14
3	Ba^{140}	0.41	16
4	Sr^{91}	0.50	14
4	Sr^{89}	0.57	16
5	Sr^{89}	0.56	15
6	Ag^{111}	0.43	13

[a]Percent of the uncorrected mean range.

from the foils beyond the control foil, coincident with the change in the relative abundance of the two isotopes. No such trend was distinguishable. Unfortunately, the low activity level of the 130 day Sn^{123} isotope gave rise to statistical fluctuations larger than the magnitude of the expected shift.

It has been mentioned that the observed decay of the tin samples showed the presence of the 27.5 hour Sn^{121} isotope. The range calculations referred to above were made using the activities observed after the 27.5 hour activity had decayed to a low level. No range is reported for this isotope because the associated soft β^- radiation (0.38 Mev)[19] led to large errors due to differences in self absorption between the various samples.

A. Corrections for Source Thickness

Experimental evidence of the effect of the source thickness was obtained from bombardments 6 and 8, both made under identical conditions except that the two uranium sources differed considerably in thickness. The differences between the observed ranges for the two bombardments are:

Fragment		ΔR (mg/cm^2 Al)
Ba^{140}		0.350 ± .028
Ag^{111}		0.374 ± .058
Sr^{89}		0.353 ± .050
	weighted mean	0.354 ± .023

The three are in agreement within the limits of the experimental error, and the weighted average was taken to be equivalent to 0.865 mg/cm^2 of source thickness, the difference between the measured thicknesses of the two sources. Corrections were then made on the assumption that the effect of the source upon the mean range was proportional to the measured source thickness.

In bombardments 2-5, each range was measured two or more times under comparable conditions, and the agreement found is evidence of the consistency of the experimental method. The results of bombardment 1, when corrected for the source thickness, are in good agreement with the other high energy results. Listed in Table VI are the final averages of the corrected results, obtained by weighting the various determinations inversely as the squares of their probable errors.

Table VI

Corrected Mean Ranges

Fragment	Range in mg/cm^2 aluminum			
	335 Mev p 90°	18 Mev d forward	18 Mev d backward	18 Mev d 90°
Sr^{89}	4.01 ± .03	4.43 ± .03	4.09 ± .04	4.26 ± .03
Sr^{91}	4.00 ± .03	4.36 ± .03	4.04 ± .03	4.20 ± .03
Ag^{111}	3.44 ± .03	3.77 ± .03	3.44 ± .06	3.60 ± .04
Cd^{115}	3.37 ± .03	--	--	--
$Sn^{123,125}$	3.19 ± .04	--	--	--
Ba^{140}	3.00 ± .02	3.29 ± .02	2.92 ± .03	3.10 ± .02

The averages of the forward and backward recoil ranges in the deuteron case, which are also listed in Table VI, correspond (to within the accuracy of the measurements) to the recoil ranges at right angles to the beam. These values are the ones to be compared with the proton results and with low energy fission.

The relative stopping power of the source observed here is in disagreement with that calculated from the results of Segre and Wiegand.[20] Employing an experimental arrangement somewhat similar to that used here, these experimenters measured the relative stopping powers of aluminum, copper, silver, and gold for slow neutron fission fragments. The stopping power of uranium was calculated from these results and checked by a comparison of a very thick uranium source with a very thin one. They reported that one mg/cm^2 of aluminum is equivalent to 3.4 of uranium or 2.7 or U_3O_8. For a uniform source the source correction should be equal to the aluminum equivalent of half the source thickness. On this basis, one mg/cm^2 of aluminum was equivalent to 1.24 mg/cm^2 of our source material. The discrepancy is in the direction corresponding to uneven thickness of our source. A thickness variation, because of the geometry of sputtering, roughness of the aluminum surface, diffusion of the uranium into the aluminum under the conditions of the sputtering, or chemical reaction of the uranium with the aluminum, may be the cause of this effect. Suzor[5] suggested similar explanations for wide discrepancies observed in his work concerning slow neutron induced fission. He also observed quite an appreciable difference in the relative stopping power of a uranium

source electroplated onto copper and one electroplated onto nickel.

The observations concerning the straggling described above are in line with the magnitude of these source corrections.

IV. DISCUSSION OF RESULTS

The differences between the forward and backward ranges of fragments from the deuteron induced fission are related to the momentum imparted to the uranium nucleus by the deuteron. These differences, from bombardments 6 and 7, are:

Fragment	ΔR (mg/cm^2 Al)
Sr^{89}	0.339 ± .047
Sr^{91}	0.326 ± .027
Ag^{111}	0.322 ± .066
Ba^{140}	0.372 ± .021
weighted average	0.351 ± .015

The probable errors do not include contributions from the source correction, because the same source was used in these two experiments. Within these errors, the differences agree, and to simplify the discussion the average value will be considered.

The excitation energy of 27 Mev (corresponding to capture of an 18 Mev deuteron) is in the region where compound nucleus formation is probable. If a compound nucleus of mass A is formed with a forward kinetic energy E_o and the total kinetic energy of the two fragments in the center-of-mass system is E, then it can be shown that for a fragment of mass M

the difference in kinetic energy between the forward and backward directions will be:

$$\Delta E = 4 \sqrt{EE_oM(A-M)} \ / \ A$$

The effect of the loss of a few neutrons has been neglected, but it amounts to only a few percent. Using 155 Mev for E, similar to the values found[2] for slow neutron induced fission, and 18(2/240) for E_o, the following differences were calculated:

M	ΔE (Mev)
89	9.3
91	9.3
111	9.6
140	9.5

An average of 9.4 Mev was selected as representative of the region studied. The uncertainty in the correct value of E is unimportant.

Since the observed differences in range and the estimated differences in energy are both nearly independent of M, then the stopping power of aluminum for fission fragments must be nearly independent of M near the beginning of the range. The average value of this stopping power is estimated to be 27 Mev cm^2/mg, based on the above data.

Nuclei which are excited by "stripping" reactions in which only one nucleon is captured, or by "hit-and-run" reactions in which neither is captured, would gain considerably less momentum than those forming true compound nuclei. If such reactions were important, then the stopping power calculated above would be too large.

The variation of ionization along the recoil paths has been studied in various gases by Lassen.[21] If it is assumed that the rate of energy loss in aluminum varies in the same way, normalization of his curves to the ranges in aluminum yield estimates of the stopping power. Such estimates (for the first tenth of the range) yield values ranging from 40 to 50 Mev cm^2/mg for the rate of energy loss in aluminum. Since the average energy loss over the whole path must be about 20 Mev cm^2/mg, our estimate 27 is more likely to be low than high. In the absence of a theory of the stopping mechanism for fission fragments in metals, it is difficult to say whether the disagreement of the values converted from the gas measurements with that which we calculated is unreasonable.

Since caluclation on the basis of the alternate modes of reaction described above leads to values of the rate of energy loss less even than the average over the whole range, these data support the assumption that compound nucleus formation is, in fact, the predominant mode of reaction leading to fission when uranium is bombarded with 18 Mev deuterons.

The ranges measured for the fragments from 335 Mev proton induced fission can be compared with those calculated for right-angle recoils from 18 Mev deuteron induced fission. A comparative plot, in Figure 4, shows the ranges from the higher energy fission to be systematically less than those from the lower energy fission. Numerical values for the differences calculated from the data of bombardments 2-7 only (to avoid the additional uncertainty caused by the source correction) are:

Fragment	ΔR (mg/cm^2)	ΔE (mev)
Sr^{89}	0.249 ± .028	6.7
Sr^{91}	0.192 ± .029	5.1
Ag^{111}	0.153 ± .036	4.1
Ba^{140}	0.099 ± .016	2.7

The range differences have been converted to approximate energy differences by use of the stopping power (27 Mev cm^2/mg) estimated above. The effect of momentum imparted by the beam is insignificant on the energies of recoils at right angles to the beam, so these differences must be related to the differences in excitation energy of the uranium nuclei.

The ranges reported here are substantially the same as those from low energy fission, as they must be if the recoil energy is due simply to the coulomb repulsion of the two fragments according to the liquid drop model of fission. Small differences are expected according to the mass and charge of the fissioning nucleus and according to the speed of the reaction, as discussed below. Accurate comparison of the ranges reported here with previous work is difficult for several reasons. Most of the previous measurements were made on fragments from the fission of U^{235} or of Pu^{239} induced by slow neutrons, while we used U^{238} and charged particles. Our fissioning nucleus is likely an isotope of neptunium, at least in the deuteron case. The accuracy of much of the previous work is in doubt, and considerable disagreement exists between various results. In those cases where the ranges were measured in substances other than aluminum, the conversion to aluminum introduces additional uncertainty. The distinction

between mean and extrapolated ranges confuses some of the comparisons.

The most significant comparison can be made with the ranges reported by Katcoff, Miskel, and Stanley[1] from their extensive study of slow neutron induced fission of Pu^{239}. Their values, corrected to aluminum, are included in Figure 4. The pronounced dip in the center of their curve indicates the lower kinetic energies that prevail when the fission is nearly symmetrical, an effect that has been verified by Brunton and Thompson.[2] There is no evidence for a similar dip in our curve for fission induced by 335 Mev protons. Our points for the 18 Mev deuteron case are too few to give evidence concerning a dip.

According to these curves, the average kinetic energy of uranium fission induced by 18 Mev deuterons is 5 or 10 Mev greater (considering both fragments) than that of Pu^{239} induced by slow neutrons, whereas the difference in nuclear charge should cause a small difference in the opposite direction. On the other hand, the results obtained by Suzor[5] for ranges in aluminum of fragments from low energy fission of U^{235}, after correction for source effects, deviate from ours in the opposite direction. It is likely that there should be some difference in the kinetic energies of slow and fast fission because in slow fission there seems to be some adjustment of the ratio of protons to neutrons in the two fragments[22,23] and there is a possibility of quantum mechanical barrier penetration effects, but such differences should be small.

Jungerman and Wright[3] by ionization measurements found the kinetic energy of fission of uranium and thorium induced by 45 Mev and 90 Mev neutrons to be on the average about five percent greater than that of

slow neutron induced fission of U^{235}. Their statistical errors were of the order of two percent. A systematic error may be present because of the assumption that ionization is proportional to kinetic energy, since the principal fragments from the high energy cases are different in mass and charge from those of the low energy case. Spallation of neutrons prior to fission may increase the kinetic energy by decreasing the nuclear dimensions; according to the simple model described by Jungerman and Wright, this effect amounts to one percent in the energy for each seven neutrons lost. Each proton lost decreases the energy about two percent, but loss of several protons is unlikely.[24] This decrease might be compensated by measurement of the ionization caused by the protons. This work confirms the idea that there is little difference in kinetic energy between fast and slow fission, apart from changes due to the identity of the particular nucleus which fissions, but because of the difficulties mentioned above the magnitude of the difference is not well established.

The comparison of our 335 Mev proton and 18 Mev deuteron experiments is more satisfactory than the comparison with low energy work, because the similarity of the experimental conditions allows us to place greater confidence in the significances of the differences. These differences can be explained very well by a model similar to those discussed by Goeckermann and Perlman[25] and by Jungerman and Wright.[3] To simplify the discussion we shall make certain approximations. The kinetic energy of fission will be assumed to be 155 Mev, as before. In calculating the momentum distribution between the two fragments, the mass of the complementary fragment will be calculated neglecting the two or three (or more?) neutrons lost

after fission from the fragments in flight.[26]

Our model for the high energy proton induced fission is as follows. The initial event is the excitation of the uranium by the proton by one or more nucleon-nucleon collisions. The proton may escape with some fraction of its original energy. It may have undergone charge exchange and escape as a fast neutron. In rare cases it may be captured to form a compound nucleus. Some of the nucleons struck by the proton may also escape with very high energies. Mesons may be produced in these initial events and escape the nucleus. Whatever the details of these initial events, there remains a more or less highly excited nucleus of mass about 238 and charge about 92. The excitation energy is dissipated by spallation, mostly of neutrons. When the nucleus is relatively unexcited, fast fission, with no preferential distribution of charge, competes effectively with the other processes, especially when many neutrons have been lost. In those cases where many protons have been lost, the fissionability parameter Z^2/A is relatively less favorable. Thus the distribution of fissioning nuclei is principally among nuclides more deficient in neutrons than is the distribution of spallation products which will be found by radiochemical studies.

Because the mass of the fissioning nucleus is less than in the low energy case, a particular fragment, say Ba^{140}, is associated with a smaller complementary fragment and therefore receives a smaller fraction of the total kinetic energy. If E is the total kinetic energy of fission, A the mass of the uranium nucleus before spallation, M the mass of the fission fragment being considered, and N the number of neutrons lost prior to fission, then

the difference in energy ΔE_M between deuteron and proton fission is given by the expression:

$$\Delta E_M = EMN/A(A-N)$$

if the effect of spallation on the value of E is neglected. From this approximate expression it follows that if the fission takes place predominantly at a single nuclide (or a few very close together) so that N is practically a constant, the observed differences in recoil energy would be approximately proportional to the masses of the fragments, while the observed differences are almost inversely as the masses. This expression was used to calculate the value of N corresponding in each case to the observed difference in recoil energies. The results are:

Fragment	ΔE_M(mev)	N
Sr^{89}	6.7	26
Sr^{91}	5.1	20
Ag^{111}	4.1	14
Ba^{140}	2.7	8

One unit has been subtracted from N to allow for the difference in mass of the proton and deuteron, and two units have been added to compensate for the probable loss of one to three neutrons prior to fission in the deuteron case. No great accuracy can be attributed to these numbers of neutrons lost because of the approximations made in the calculation.

The results of Folger, Stevenson, and Seaborg[17] allow one to deduce that the strontium and barium fragments from proton induced fission studied

in the present work are largely produced as primary yields; that is, relatively little of these activities result from beta decay of other primary products. Probably the Ag^{111} is formed principally as Pd^{111} or Rh^{111}. On the basis of the assumption that there is no time in fast fission for preferential charge distribution, one can estimate the identity of the principal fissioning nucleus responsible for each observed fragment. The results of such estimates are:

Fragment	Fissioning nucleus	N
Sr^{89}	U^{216} or Np^{218}	21-22
Sr^{91}	U^{220} or Np^{223}	16-18
Pd^{111}	U^{222} or Np^{224}	15-16
Rh^{111}	U^{227} or Np^{229}	10-11
Ba^{140}	U^{230} or Np^{233}	6-8

The agreement of these values of N with those calculated from the observed differences in energy is probably better than can be expected of so crude a treatment, but it indicates that the trend of results is consistent with our model of the fission process.

Attempts were made to calculate the effect of spallation on E by the equation (derived for tangent spheres):

$$E/E' = Z_1Z_2(A_1^{1/3} + A_2'^{1/3})/Z_1'Z_2'(A_1^{1/3} + A_2^{1/3})$$

where the subscripts indicate the two fragments and the primes distinguish the deuteron case from the proton case. The calculations were unsatisfactory because the results were too sensitive to the choice of the modes of

fission in the deuteron case. Unfortunately, there are no data available concerning the independent yields of the products of concern to us from fission induced by 18 Mev deuterons. Furthermore, since the formula is not adequate to predict the variation of kinetic energy with mass ratio in the case of low energy fission, it need not be accurate in the high energy case. The agreement between our very simple treatment above and the observations may be evidence that the dependence of E on spallation is not very great.

The differences in recoil energy can be explained in each case by various arbitrary numbers of protons together with some corresponding numbers of neutrons, but no single "average" fissioning nucleus can explain all the data. Thus we are forced to conclude that a considerable variety of nuclei undergo fission.

Since the loss of two or three protons is enough to explain all of the observed decrease in recoil energy, it is demonstrated that extensive loss of protons prior to fission is not a frequent event.

Another possible mechanism is that fission occurs while the nucleus is still highly excited, and that neutrons escape from the remaining highly excited fragments. If it is assumed that the excitation energy is shared between the fragments in proportion to their masses and that the neutrons escape in random directions, then with the same approximations as made before it results that about half as many neutrons are required to be lost (from both fragments) as in the case when they are lost prior to fission in order to explain the observed differences in recoil energy. We consider it unlikely that fission precedes very much of the spallation, but this calculation shows that loss of a few of the neutrons after fission does not

affect our treatment very seriously.

A consequence of these data is that the observed curve of yield of fission products as a function of mass number, which for high energy fission of uranium has a broad maximum,[11,17] is a weighted superposition of such curves for the various species which undergo fission. It is possible that these latter curves are peaked much more sharply.

This problem was suggested by Dr. Glenn T. Seaborg, whose encouragement and advice aided us throughout the work. We are indebted also to Dr. A. S. Newton for many helpful suggestions and to Dr. W. R. McDonell for assistance in the experiments. These experiments would have been impossible without the cooperation of the crews of the 60-inch and 184-inch cyclotrons.

This work was performed under the auspices of the U. S. Atomic Energy Commission.

V. REFERENCES

1. S. Katcoff, J. A. Miskel, and C. W. Stanley, Phys. Rev. 74, 631 (1948).
2. D. C. Brunton and W. B. Thompson, Phys. Rev. 76, 848 (1949); Can. J. Research A 28, 498 (1950).
3. J. Jungerman and S. C. Wright, Phys. Rev. 76, 1112 (1949).
4. F. Joliot, Compt. rend. 218, 488 (1944).
5. F. Suzor, Compt. rend. 224, 1155 (1947); 226, 1081 (1948); Ann. phys. (12) 4, 269 (1949).
6. B. Finkle, E. J. Hoagland, S. Katcoff, and N. Sugarman, National Nuclear Energy Series, Plutonium Project Record Vol. 9, "Radiochemical Studies: The Fission Products," Paper No. 46 (McGraw-Hill Book Company, Inc., New York, 1951), p. 471.
7. N. Bohr, Phys. Rev. 59, 270 (1941).
8. J. Strong, "Procedures in Experimental Physics (Prentice-Hall, Inc., New York, 1938), p. 159.
9. A. Langer, J. Chem. Phys. 10, 321 (1942).
10. A. S. Newton, Phys. Rev. 75, 17 (1949).
11. P. R. O'Connor and G. T. Seaborg, Phys. Rev. 74, 1189 (1948).
12. E. R. Tompkins, J. Am. Chem. Soc. 70, 3520 (1948).
13. A. S. Newton and W. R. McDonell, University of California Radiation Laboratory Report UCRL-395 (July 11, 1949).
14. C. M. Nelson, B. H. Ketelle, and G. E. Boyd, Oak Ridge National Laboratory Report ORNL-828 (November 10, 1950); B. H. Ketelle, C. M. Nelson, and G. E. Boyd, Phys. Rev. 79, 242 (1950).

15. J. C. Lee and M. L. Pool, Phys. Rev. 76, 606 (1949).

16. J. L. Lawson and J. M. Cork, Phys. Rev. 57, 982 (1940).

17. R. L. Folger, P. C. Stevenson, and G. T. Seaborg, University of California Radiation Laboratory Report UCRL-1195 Rev. (May 28, 1951).

18. N. Feather and J. V. Dunworth, Proc. Roy. Soc. London A 168, 566 (1938).

19. R. B. Duffield and L. M. Langer, Phys. Rev. 76, 1272 (1949).

20. E. Segrè and C. Wiegand, Phys. Rev. 70, 808 (1946).

21. N. O. Lassen, Phys. Rev. 70, 577 (1946); 75, 1762 (1949); D. Kgl. Danske Vidensk. Selskab, Mat.-fys. Medd. 25, No. 11 (1949).

22. C. D. Coryell, L. E. Glendenin, and R. R. Edwards, Phys. Rev. 75, 337 (1949).

23. D. C. Brunton, Phys. Rev. 76, 1798 (1949).

24. Y. Yamaguchi, Progr. Theor. Phys. (Japan) 5, 142 (1950).

25. R. H. Goeckermann and I. Perlman, Phys. Rev. 73, 1127 (1948); 76, 628 (1949).

26. R. R. Wilson, Phys. Rev. 72, 189 (1947).

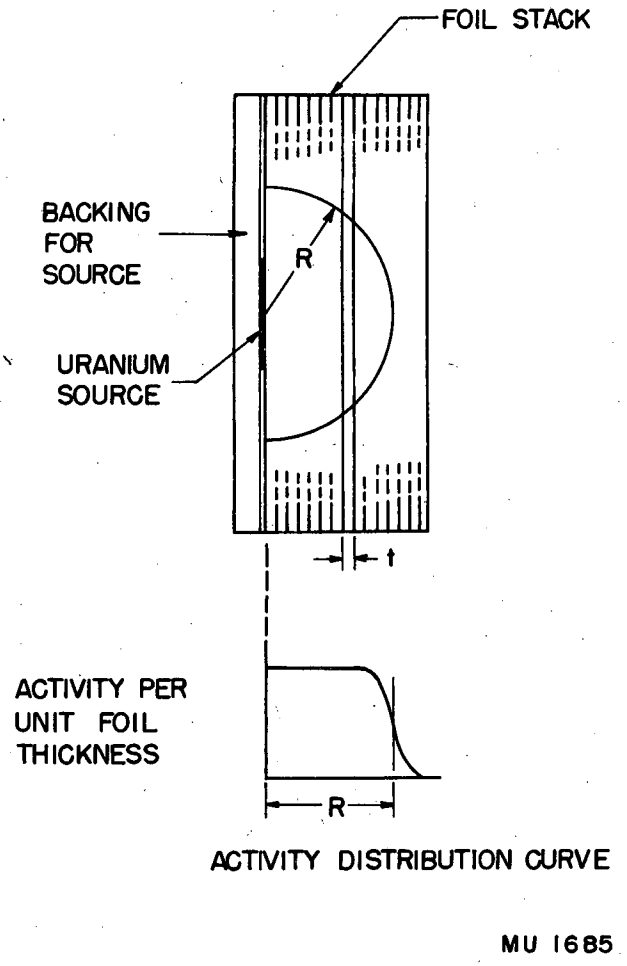

Figure 1

Schematic Arrangement

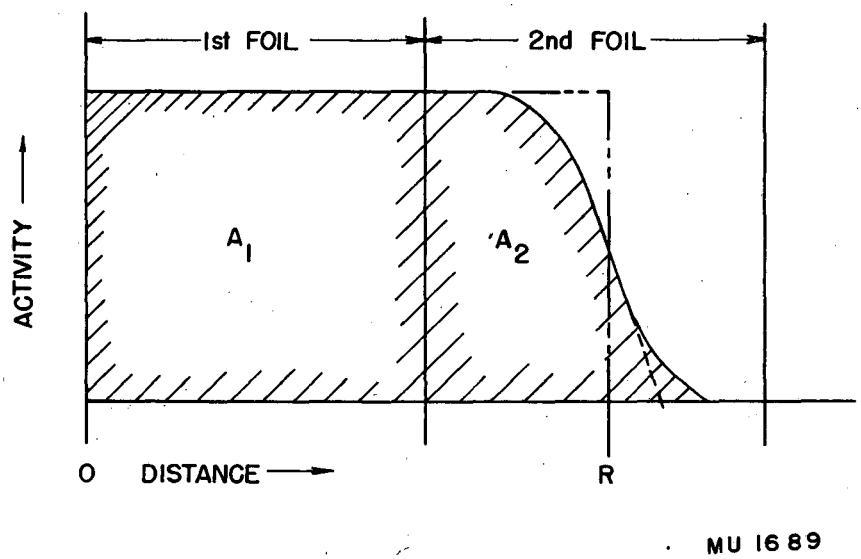

Figure 2

Activity Distribution - Two Foil Scheme

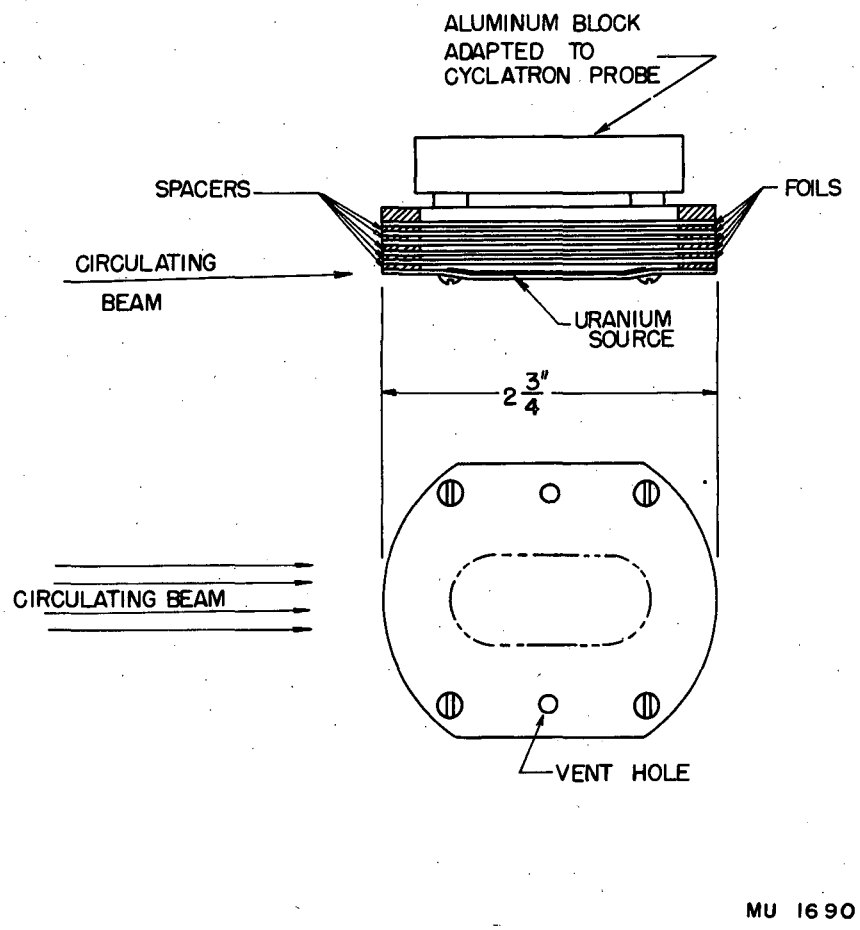

Figure 3

Experimental Arrangement

Target Assembly for 184-inch Cyclotron Experiments

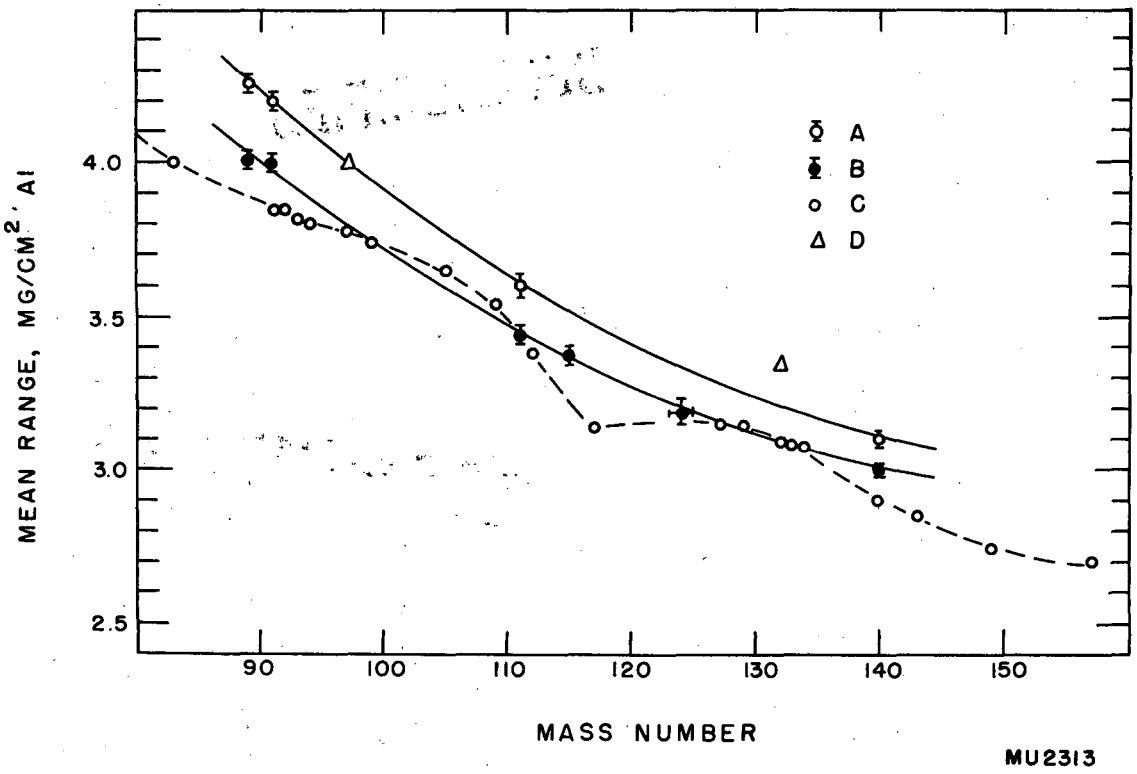

Figure 4

Mean ranges of fragments from fission induced by: A, 18 Mev deuterons; B, 335 Mev protons; C, slow neutrons, Katcoff, et al. (Ref. 1); D, slow neutrons, Suzor (Ref. 5).

MAR 30 1953

DECLASSIFIED

SECRET