Copy 2

UCRL- 1380

UNCLASSIFIED

UNIVERSITY OF CALIFORNIA — BERKELEY

TWO-WEEK LOAN COPY

This is a Library Circulating Copy which may be borrowed for two weeks. For a personal retention copy, call Tech. Info. Division, Ext. 5545

RADIATION LABORATORY

DISCLAIMER

This document was prepared as an account of work sponsored by the United States Government. While this document is believed to contain correct information, neither the United States Government nor any agency thereof, nor the Regents of the University of California, nor any of their employees, makes any warranty, express or implied, or assumes any legal responsibility for the accuracy, completeness, or usefulness of any information, apparatus, product, or process disclosed, or represents that its use would not infringe privately owned rights. Reference herein to any specific commercial product, process, or service by its trade name, trademark, manufacturer, or otherwise, does not necessarily constitute or imply its endorsement, recommendation, or favoring by the United States Government or any agency thereof, or the Regents of the University of California. The views and opinions of authors expressed herein do not necessarily state or reflect those of the United States Government or any agency thereof or the Regents of the University of California.

UNIVERSITY OF CALIFORNIA
Radiation Laboratory

Cover Sheet
Do not remove

INDEX NO. UCRL-1380
This document contains _____ pages
This is copy 2 of _____ series ____

Issued to INFORMATION DIVISION
RADIATION LABORATORY
UNIVERSITY OF CALIFORNIA
BERKELEY, CALIFORNIA

UNCLASSIFIED
UNCLASSIFIED
Classification

Each person who receives this document must sign the cover sheet in the space below.

Route to	Noted by	Date	Route to	Noted by	Date
R Watt	R Watt				
B. Cushman		✓			
W J Knox					

UCRL-1380
Unclassified Distribution

UNIVERSITY OF CALIFORNIA

Radiation Laboratory

Contract No. W-7405-eng-48

PHYSICS DIVISION QUARTERLY REPORT

February, March and April, 1951

July 9, 1951

Some of the results reported in this document may be of a preliminary or incomplete nature. It is the request of the Radiation Laboratory that the document not be circulated off the project nor the results quoted without permission.

Berkeley, California

TABLE OF CONTENTS

I GENERAL PHYSICS RESEARCH

1. Cloud Chamber Program 3
2. Film Program 5
3. Search for New Delayed Alpha Particle Emitters 6
4. The Gamma-Ray Spectrum from 350 Mev Protons on Carbon and Wolfram 7
5. Inelastically Scattered Protons from Heavy Elements 7
6. Search for an Excited State of the He^4 Nucleus 8
7. The Neutral Meson Program on the 184-inch Cyclotron 8
8. Meson Experiments 11
9. Deuteron-Proton Scattering Using 190 Mev Deuterons 12
10. Effect of Chemical Binding on Stopping Power 12
11. Proton Scattering by Complex Nuclei 13
12. Proton-Helium Scattering 13
13. Crystal Gamma Counter 15
14. Synchrotron Studies 17
15. Theoretical Physics 18

II ACCELERATOR OPERATION AND DEVELOPMENT

1. 184-inch Cyclotron Operation 19
2. 60-inch Cyclotron Operation 19
3. Synchrotron Operation 21
4. Linear Accelerator and Van de Graaff Machines 21
5. Bevatron Development 22

* Previous Quarterly Report, UCRL-1191.

I GENERAL PHYSICS RESEARCH

1. Cloud Chamber Program

Wilson M. Powell

Diffusion Cloud Chamber. A diffusion cloud chamber built by J. F. Tracy to go in a magnet giving an 8200 gauss field has been operated in the meson beam produced by the reaction $p + p \longrightarrow \pi^+ + d$ where 350 Mev protons bombard a polyethylene target. The target was located inside a magnet of sufficient size to turn the mesons through 90 degrees so that they passed through a 5 foot thick concrete wall into the cloud chamber. The cloud chamber contained two plates, one containing a section of graphite 5/8 inch thick and another section of polyethylene, one inch thick. The second plate was a half inch thick slab of copper. The total thickness of material was chosen so that a 55 Mev π^+ meson would fail to penetrate all plates, and a μ meson of the same radius of curvature would pass through the plates. Hopes of being able to distinguish π mesons from μ mesons in this way were not realized because of the inaccuracies introduced by turbulence in the continuous chamber.

Construction of the chamber. The bottom of the chamber consisted of a flat double walled disk as shown in Fig. 1 25 inches in diameter which was connected to a tank containing a dry ice acetone mixture. A small centrifugal pump circulated the mixture through the double walled bottom of the chamber. Black velvet on the bottom of the chamber was submerged in methyl alcohol. The double side-walls of the chamber were made of 1/32 inch polystyrene sheets capped by split rubber hoses covering the edges. The top of 1/8 inch brass was heated by circulating water of an appropriate temperature through the double-walled cone as shown in Fig. 1. The bottom side of the top was covered with black velvet to reduce reflections in the methyl alcohol. The cone was covered by a quarter inch thick piece of plate glass. A small brass tube perforated at frequent intervals by small holes formed a ring at the top of the cone. Methyl alcohol introduced into this tube spread over a felt pad beneath the black velvet on the truncated cone.

The chamber gave very beautiful traces to a height of 3 inches without the plates. If the tank was filled with dry ice the mixture reached a temperature of -75° centigrade. At this low temperature the bottom of the chamber was covered by a blanket of fine droplets which made an objectionable background for the tracks above. This disappeared if the temperature was allowed to rise to -65° centigrade, and a large fraction of the run was made near this temperature.

When carbon and copper plates were first introduced the gas near the plates was cooled so much that a very strong convection current appeared down the sides of the plates. This prevented the chamber from producing tracks.

An aluminum foil box placed over the plates large enough to have a space of 1/8 inch on all sides of the plates stopped this convection current. As an added precaution a water tube was run through the top of each aluminum foil box and connected to the water circulating system. This prevented the black velvet placed on the upper edges of the boxes from getting wet, but the chamber operated well without running water through the

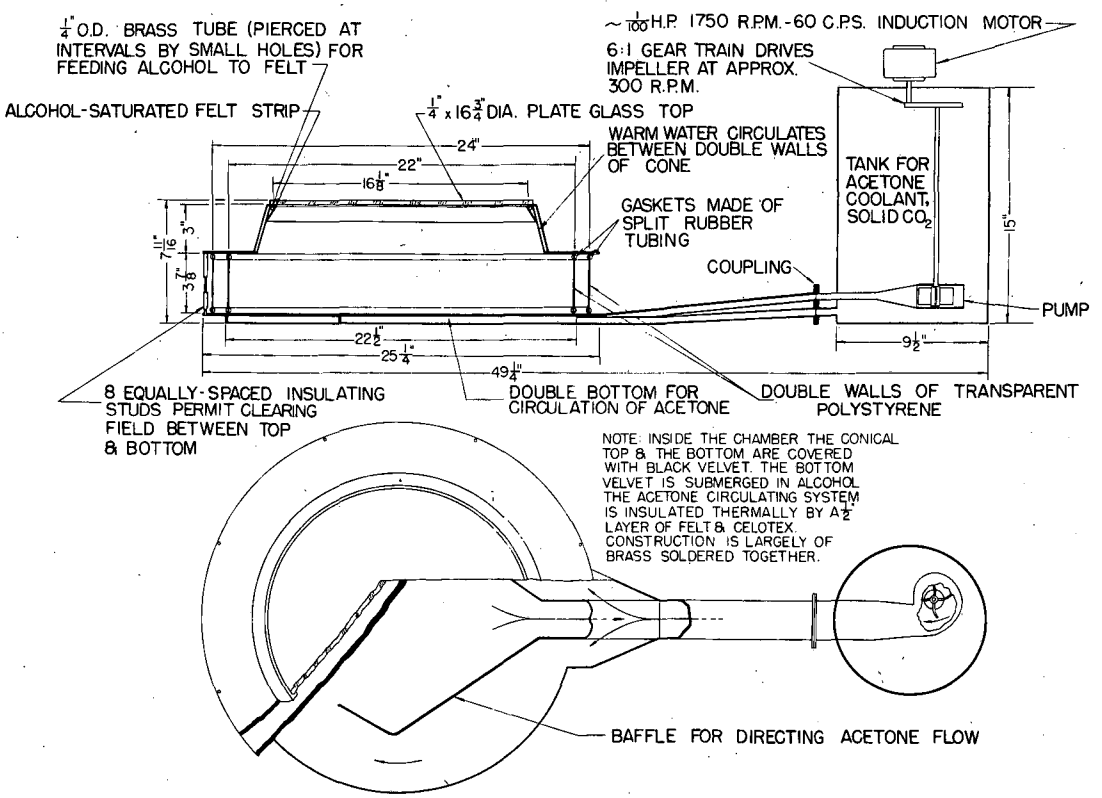

DIFFUSION CLOUD CHAMBER
FOR PANTAGRAPH MAGNET

Fig. 1

tubes over the plates. The chamber gas was air, for the run to be described, but it operated equally well on argon or carbon dioxide.

Operation of the Chamber.

a) Response to Clearing Field. Each time the chamber bottom was cooled tracks would appear first very close to the bottom of the chamber only. If a clearing field of 500 volts between bottom and top were applied for a few seconds a large burst of drops would appear followed by a clearing of the chamber and then tracks appeared over a region 2 to 2-$\frac{1}{4}$ inch deep and these would continue indefinitely even after removal of the clearing field. The chamber could be made to operate over the small region again by bringing up a powerful source of radiation strong enough to desensitize the chamber. Many very fine tracks appeared close to the bottom while the source was near, and after removing the source the tracks formed only in this limited region until further application of a clearing field.

The best performance was obtained with the positive side of the clearing field attached to the bottom of the chamber. The burst of droplets appearing on application of the field was less in this case. This indicates perhaps that drops form less readily on positive ions. Also if the clearing field were applied the other way diffuse columns of positive ions from particles traversing the chamber above the sensitive region were swept down into the sensitive region giving broad "caterpillar" tracks.

With the bottom of the chamber positive a cloud of drops appears on applying the field. This cloud reduces the vapor density in its path on falling so that the fog near the bottom of the chamber would disappear for about 2 seconds after the cloud had fallen and reappear again after the vapor density had been restored. Then without further application of the field the fog on the bottom would disappear a second time for about a second and reappear again. This occurred when the bottom was colder than 60°C. When the chamber was run the clearing field was turned on for a second and the mesons shot into the chamber during this second clearing of the fog at the bottom.

b) Frequency of operation. No attempt was made to see how frequently pictures could be taken but it is probably of the order of one picture in 3 seconds. Excellent pictures were made every 6 seconds, which was as fast as the condensers for the flash lamps would recharge. Three lights with 500 microfareds charged to 1500 volts allowed pictures to be taken at an f number of 5.6.

c) Convection Currents. The gas in the chamber moves with convection currents which probably arise from temperature differences along the top of the chamber. This motion is slow, of the order of 3 cm per second maximum. When several pulses from the cyclotron were used the tracks appeared to be distorted. However when only one pulse was used and the lights flashed 0.05 seconds later the tracks showed spurious curvature of a radius around ten meters. Since it is so easy to observe motion of the gas before the picture is taken, it should be easy to reduce these convection currents so that more pulses could be used.

d) Height of Sensitive Region. The tracks appeared to extend up to 2 inches above the bottom of the chamber. This distance went as high as $2\frac{1}{4}$ inches and never below 2 inches. Tracks in the uppermost quarter of an inch appeared to be broader than those that occur lower down as if the rate of formation of drops were slower there and the ions had time to diffuse apart. The drops forming the background are larger than those in a conventional chamber for the simple reason that they have had a longer time (the length of time while they fall) to form.

e) Tracks near Plates. In most cases tracks disappeared about $\frac{3}{8}$ of an inch from the plates in the chamber. This is due to the fact that the supersaturated vapor wets the plates and is saturated only (not supersaturated) next to the plates. At one place in the chamber a convection current appeared to move new gas close to the plate in such a way as to reduce this distance to $\frac{1}{8}$ inch. Brighter illumination might improve this somewhat, but not much is expected in the way of improvement.

Preliminary Results on the Spectrum of the Positrons from Decay of Positive μ Mesons. Two carbon plates $\frac{3}{16}$ inch thick were mounted in a 22 inch diameter cloud chamber in an 8200 gauss field. The meson beam described above was reduced in energy by passing it through an inch and a half of carbon. The meson beam is pulsed three times for every cloud chamber picture. One μ decay is produced in every five pictures, and a spectrum from 100 decays was obtained which agreed with that obtained by Anderson et al.

Further work is being done on this.

2. Film Program

Walter H. Barkas

Meson Decay Energetics. (W. Birnbaum, F. Smith, W. Barkas). The following abstract has been submitted for the Vancouver meeting of the American Physical Society: "Meson Mass Ratio and Energetics of Meson Decay", Birnbaum, Smith and Barkas. The π/μ meson mass ratio is being determined with new geometry, using similar ranges vs. momentum relations as were employed in the measurement of the π-meson to proton mass ratio[1]. π and μ mesons from the target were selected magnetically to enter the emulsion with approximately equal velocities. Two distinct range distributions corresponding to two distinct masses were found. The dispersion observed is in agreement with range straggling theory. Present statistics give the value for the π/μ mass ratio as 1.317 ± 0.004. The absolute momentum, p_o, of the μ's from decay of π's stopping in the emulsion is also determined by comparison with μ's from the target which have momenta within a few percent of p_o. For this purpose, the absolute value of the magnetic field intensity of the 184-inch cyclotron has been mapped (using a nuclear flux meter) over the orbit of the mesons. Preliminary results give a value of $29.86 \pm 0.006 \frac{\text{Mev}}{\text{C}}$. From the above two basic results, and setting the mass of the "neutrino" involved in the $\pi - \mu$ decay equal to zero, we obtain: $\pi - \mu$ mass difference = $66.46 \pm 0.16\ M_o$, π mass = $276.1 \pm 2.3\ M_o$, μ mass = $209.6 \pm 2.4\ M_o$ as absolute

values with no reference to the proton mass. The μ kinetic energy associated with $p_o = 4.085 \pm 0.044$ Mev.

[1] Barkas, Smith and Gardner, Phys. Rev. 82, 102 (1951).

Beam of μ^- Mesons (D. Sherman, W. Barkas). It has long been desired to obtain a sample of μ^- mesons free of π meson contamination. A series of experiments has now led to an apparent realization of this goal.

Although it is believed that few, if any, μ mesons are produced directly in the cyclotron target, the presence of a high density of π^- mesons in the vicinity of the target makes the target, in effect, a diffuse source of μ mesons.

We have constructed a channel which accepts π^- mesons of 5 ± 4 Mev coming from the target. Using an absorber in front of the detecting plates which will stop π mesons of up to 59 Mev, we have looked for mesons in the detecting plates and have found a fair abundance of mesons. Since μ mesons of the same momentum as π mesons will have a greater range, it is believed that the tracks found are those of μ^- mesons. The interaction of those mesons with matter is being investigated.

Other Studies. During the quarter a significant amount of work has gone into a number of projects for which no new results are yet available. These include high energy electron processes, meson scattering, development of emulsion technics, range straggling, and work for other laboratories.

3. Search for New Delayed Alpha Particle Emitters

L. W. Alvarez

The three known radioactive nuclei with $A = 4n$, $Z = 2n + 1$ have been found in substances bombarded by the linear accelerator beam. These nuclei are B^8, N^{12}, and Na^{20}. Two new members of this series have been found in the past three months, and are F^{16} and Al^{24}. The series is therefore complete from $n = 2$ to $n = 7$. For $n = 1$ the nucleus is Li^4, which is almost certainly unstable. The period of Al^{24} is 1.9 seconds and its mass (from its (p,n)threshold) is 24.0070. F^{16} has a period of approximately 1/2 second and a mass of 16.0168.

Proton bombardment of three different fluorine compounds has yielded a 4 second period which has not yet been identified. It was at first thought to be Ne^{18}, the one unknown nucleus which could be made by 32 Mev protons on F^{19}. This assignment appears to be incorrect, however, since the (p,n) threshold for this reaction is so low that the mass of the 4 second period, if it were Ne^{18}, would be less than the mass of F^{18}. An investigation of this activity is under way and a search for Ne^{18} is also planned.

4. The Gamma Ray Spectrum from 350 Mev Protons on Carbon and Wolfram

W. Crandall, K. Crowe, W. Panofsky, R. Phillips and
Darcy Walher

In studying gamma rays from π^- capture in carbon, it seemed advisable to study first the background from the incident proton beam which penetrates the meson producing target and strikes the carbon. These gamma rays were observed in a manner similar to experiments by Moyer, et al, using bombarding angles 0°, 180°, 35° and 135° with respect to the protons. Spectra have been obtained with statistics of the order of 5 percent over the energy range greater than 40 Mev. Analysis of this data was made from the following point of view: The well known theorem concerning π^0 energy spectrum says that the average overall solid angles of the gamma ray intensity must be symmetric about 1/2 the π^0 rest mass. From weighting by the solid angle, the spectra obtained show a minimum component of the order of 5 percent which, if subtracted in the region of 60 - 100 Mev, produces a symmetric spectrum. It is not possible by this experiment at present to identify these gamma rays with a specific meson reaction. The following points were investigated: The gamma ray spectrum with 280 Mev protons appears to have too high an energy distribution also. The other point that was checked was the 180° comparison between carbon and wolfram, where no difference was observed within statistics over the whole gamma ray energy range.

5. Inelastically Scattered Protons from Heavy Elements

J. Benveniste, E. Martinelli, R. Wallace

The program of investigation of the spectrum of inelastically scattered protons from heavy elements is continuing.

The current study is that of an effect first observed in this laboratory by Levinthal and Silverman: when heavy elements such as Au and Pb were bombarded with 32 Mev protons from the linear accelerator, low range particles corresponding to protons of less energy than the barrier of the target element were seen to come off in numbers much larger than could be explained by the Gamow penetration factor.

In the present experiments, some of the more gross shortcomings of the earlier work have been eliminated. To be sure that the collimator introduces no appreciable low energy component into the incident beam, a new collimator has been tested and found very effective. To be sure that no low Z contaminant (e.g. diffusion pump oil) is occluded on the surface of the target, a platinum target is now used which is heated practically to incandescence by passing current through it during the bombardment.

In spite of these precautions, the infra-barrier effect is still observed. The possibility that the low range particles are not protons, but rather deuterons or higher mass particles of consequently greater energy will be studied shortly.

6. Search for an excited State of the He^4 Nucleus

J. Benveniste and B. Cork

An excited state of the He^4 nucleus has been sought by the method of inelastic scattering of protons. A chamber filled with helium gas was bombarded with 31.1 Mev protons from the linear accelerator and the spectrum of scattered particles was observed at several angles.

Three peaks have been observed. Two of these peaks were readily identified as those of the elastically scattered protons and the recoiling helium nucleus. From the kinematics of the problem and from independent measurements of the range and energy of the particles composing the third peak, they were identified as deuterons from the heretofore unobserved reaction $He^4(p,d)He^3$. Experiments to measure the angular distribution of these deuterons are now in progress.

Although a proton group with energy as low as 4.5 Mev corresponding to an excitation energy of 23 Mev in the target nucleus, should have been seen, no low energy proton group has been observed. Hence it may be said that there exists no excited level of the helium nucleus up to 23 Mev above the ground state which has a cross section for formation by this process greater than 1 millibarn per steradian.

7. The Neutral Meson Program on the 184-inch Cyclotron

Walter Crandall, Richard Hales, R. H. Hildebrand, Norman Knable, Richard Madey and B. J. Moyer

Neutral meson experiments at the cyclotron for this past quarter may be classified according to the method of detecting the π^0. One method is that of detecting the two decay photons in coincidence; the second depends on detecting a single photon.

Photon Coincidences. The supporting yoke and electronics mentioned in recent reports have been used for the γ-γ coincidence work. Coincidences have been observed at the synthrotron; the angular correlations obtained agree with the previous work done there.

Efforts are now being made with this equipment to detect γ-γ coincidences at the cyclotron, with some initial success.

Single Photon Detection. Detection of single photons was described in the last report. A further check was made to verify that the equipment was detecting photons with energy corresponding to the π^0 decay. The counting rate as a function of the distance of the counters from the converter, Fig. 1, has a peak at S = 1 in. for 1/4 in. lead converter. The low value at small distance, Fig. 2, is justified by the finite separation of the counters and the fact that the distance between the scattered electron pair increases with the distance from the scatterer. Thus the separation of the electrons is too

small to allow one to scatter into one pair of counters and the second to scatter into the other pair with as high a probability as is given for greater converter to counter distance. The counting rate also decreases when the distance S becomes large enough that an appreciable number of electrons scatter outside the counters.

The counting rate as a function of converter thickness has a peak for lead at 1/4 in., Fig. 2. This is compatible with a high-energy photon of the order of 50-100 Mev.

Neutral Meson Yields from Different Elements. More data have been obtained on the hydrogen cross section. Further data from a polyethylene-carbon difference and also from an H_2O-liquid O_2 difference give as a cumulative best figure:

$$\sigma H = 0.012 \pm 0.01$$

$$\sigma c = 1.000$$

The deuterium cross section has been compared to that for oxygen by the ratio of the D_2O and H_2O difference to the yield from liquid O_2 and also from H_2O. This gives

$$\frac{\sigma D - \sigma H}{\sigma O} = 0.114 \pm 0.027$$

Within experimental error this is the ratio of neutrons in deuterium to those in oxygen.

The deuterium-oxygen ratio seems to indicate that the production of neutral mesons from p-p interactions is suppressed not only for free protons but also for protons bound in nuclei. To check this possibility the relative yields from Be^9, B^{10}, B^{11}, C^{12} were obtained. Isotopic B^{10} and natural boron (82 percent B^{11}, 18 percent B^{10}) were used. The results are shown in Table I.

TABLE I

	Be^9	B^{10}	Bnat	C^{12}
Atomic weight	9.02	10.0	10.82	12.01
Yield per gm. atom per unit beam	36.2 ± 0.9	36.0 ± 0.8	41.7 ± 0.95	43.3 ± 1.13
Rel. Yield (normalized to C^{12})	5.01 ± 3%	4.99 ± 3%	5.78 ± 25%	6.00 ± 25%
Effective No. of neutrons/nucleus	5	5	5.82	6

These data indicate within the statistics, a relative yield proportional to the number of neutrons in a given nucleus for these elements.

Various heavy nuclei have also been used as targets; namely H_2O, CCl_4 and Pb, to give a relative yield for various elements to date as shown in Table II.

TABLE II

Element	Mass No.	Neutrons	Rel. Yield
H	1	0	0.072 ± 0.06
D	2	1	0.85 ± 0.20
Be	9	5	5.01 ± 0.12
B^{10}	10	5	4.99 ± 0.11
B	10.82	5.82	5.78 ± 0.13
C	12	6	6.00 ± 0.22 0.16
O	18	8	7.46 ± 0.28
Al	27	14	10.00 ± 2.8
Cl	35.5	18.5	14.25 ± 0.30
Pb	207.2	125	102. ± 9.1

This is compatible with a yield proportional to A for the high Z elements.

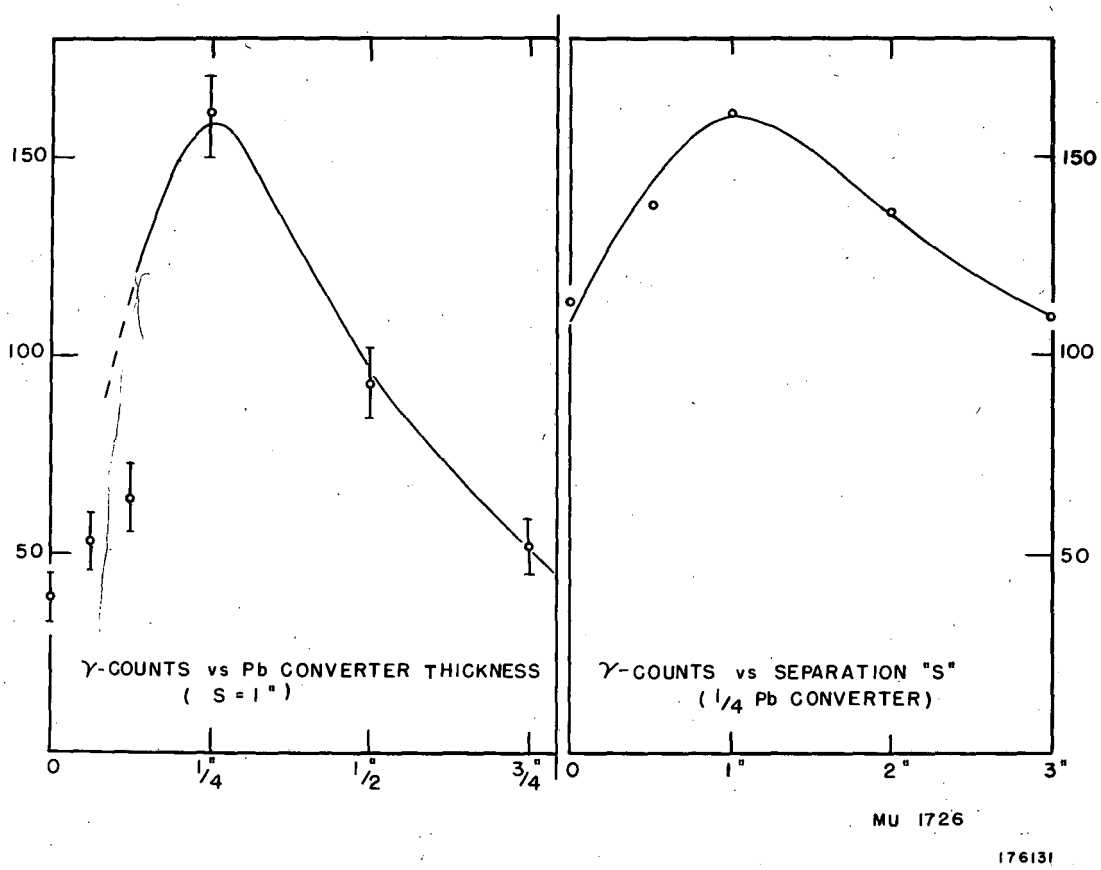
150
100
50
γ-COUNTS vs Pb CONVERTER THICKNESS
(S = 1")
0
1/4"
1/2"
3/4"
γ-COUNTS vs SEPARATION "S"
(1/4 Pb CONVERTER)
0
1"
2"
3"
150
100
50
MU 1726
176131

Fig. 1

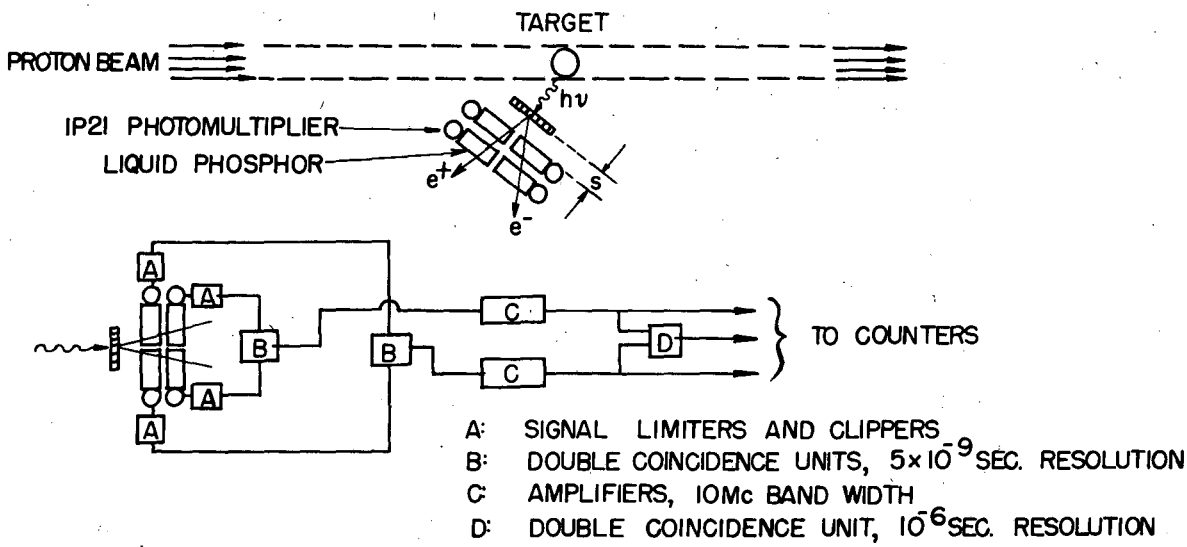

APPARATUS AND CIRCUIT FOR DETECTION OF HIGH-ENERGY PHOTONS

MU 1724

Fig. 2

8. Meson Experiments

C. Richman, M. Skinner, B. Youtz, W. F. Cartwright, O. Heinz

Scattering of π^+ Mesons by Carbon. In the last quarterly report a measurement of the scattering cross section at 90° of 47 Mev π^+ mesons by carbon was described; this measurement yielded $d\sigma / d\Omega = (2.2 \pm 1.0)10^{-26}$ cm^2 per steradian.

The experiment has been repeated with similar but improved geometry, and a value of $(1.7 \pm 0.5)\ 10^{-26}$ cm^2/ster. has been obtained for the scattering cross sections at 90°.

Deuteron Detection from n-p Reaction. An experiment is in progress to detect the deuterons from the reaction $n + p \rightarrow \pi^0 + d$ using the neutron beam of the 184-inch cyclotron. The deuterons are detected in proportional counters and are identified by their range and angular distribution.

π^+ Production by p-p Interaction at 0°. The low energy part of the meson spectrum from the reaction $p + p \rightarrow \pi^+ + n + p$ is being examined with nuclear emulsions. If there is an attractive meson-nucleon interaction a peak would be expected between 6 and 16 Mev in the 0° spectrum. The plates are now being scanned.

9. Deuteron-Proton Scattering using 190 Mev Deuterons

A. Bloom. O. Chamberlain, M. O. Stern

The inelastic d-p scattering has been further studied, using two scintillation counters in coincidence to detect the scattered protons. The method, outlined below, is intended to measure the number of p-p type collisions, that is, collisions in which the deuteron is broken up as the result of a p-p collision, leaving the neutron momentum essentially unchanged by the collision. One counter is fixed in position at angle θ from the beam. Coincidence counting rates (also background counting rates) are measured for a variety of positions of the other counter. In the arrangement used the first counter is to the left of the beam and the second counter is to the right of the beam, its position being changed in two directions; nearer and farther from the beam and also vertically, up and down. Conservation of energy and momentum dictate that the two protons emerging after a scattering process of this type must be in directions about 86 degrees apart in the laboratory coordinate system, with a vertical spread of about 15 degrees. Such a distribution is observed. By integrating the effect over all positions of the second counter one can obtain the rate of p-p type collisions in which one proton passes into the first counter. This gives the differential cross section for protons from this p-p type collision at the angle θ of the first counter.

In all cases the effects of accidental coincidences and background from carbon in the polyethylene target have been subtracted.

The procedure has given the following results for the differential cross section in the laboratory coordinate system. At 45°, $(6.3 \pm 0.7) \times 10^{-27}$ cm^2/sterad. At 30°, $(5.1 \pm 0.5) \times 10^{-27}$ cm^2/sterad. The question of whether or not any events can be missed in this procedure is still being studied. The cross sections given are somewhat lower than would be expected theoretically, being respectively 1/3 and 1/4 of the estimated free p-p cross sections. The theoretical prediction is about twice the values given.

An attempt is being made, using similar apparatus, to measure the total d-p cross section. Since in every d-p scattering process whether elastic or inelastic two singly charged particles emerge, the counting rates of single counters should yield the total cross section. The present result of integration over-all angles of a single counter gives a cross section of $(88 \pm 9) \times 10^{-27}$ cm^2. This result is surprisingly small compared to the total n-d cross section measured at the same relative velocity, namely 117×10^{-27} cm^2.

10. Effect of Chemical Binding on Stopping Power

T. J. Thompson

Due to small fluctuations in the energy of the proton beam from the 184-inch cyclotron it has been necessary to speed up the recording system for taking data, to allow several determinations to be made in rapid succession

without interruption of the cyclotron operation. Considerable progress has been made along this line; however some changes are still in progress. Present results are reproducible to 0.3 percent, still short of the expected 0.1 percent accuracy.

The procedure for routine measurement of the densities of liquids used has been considerably improved, and is believed adequate.

11. Proton Scattering by Complex Nuclei

O. Chamberlain

A strong correlation has been observed between the directions with which two protons emerge from a carbon or lithium nucleus bombarded with 345 Mev protons. The apparatus used is similar to the p-p scattering apparatus, using two stilbene scintillation counters to detect the protons. When one counter is fixed at angle Θ and the other is varied in position, the coincidence rate has a strong maximum when the angle between the counters is 80°, falling to half value at $\pm 14^{\circ}$ in lithium, at $\pm 22^{\circ}$ in carbon. This correlation is interpreted as resulting from p-p collisions within the nucleus. It is altered from the sharp p-p correlation (with angle between counters = 85°) mainly in the following ways. The correlation is broadened by the momentum distribution of protons within the target nucleus, and the maximum is shifted to 80° by the effect of binding energy of the struck proton in the original nucleus. The interpretation given is qualitatively in agreement with the experimental results so far obtained. However, the momentum distribution deduced, by a theory in first approximation is different depending upon the angle Θ used for the fixed counter. Pending better understanding of the phenomenon a full interpretation will not be possible.

In the future some attempts will be made to improve the extrapolation to zero beam intensity which is necessary in this experiment to eliminate accidental coincidences. Also the differential cross section for this type of process will be measured, for comparison with the differential cross section for p-p scattering.

12. Proton - Helium Scattering

Thomas M. Putnam, Jr.

Measurements have been made on the angular distribution of 9.8 Mev protons scattered from helium. The 20 Mev molecular hydrogen beam from the 60-inch cyclotron was passed down an iron snout as reported in UCRL-1057 to bring it into the scattering chamber[1]. The scattering volume was separated from the cyclotron vacuum by a 1 mil aluminum window. The hydrogen molecules break into two protons in passing through this window, providing a beam

of approximately 9.8 Mev protons. The scattered protons were detected by 1 in. x 3 in. photographic emulsions (Ilford C2, 100 micron) at every 2.5° angle from 10° to 172.5° in laboratory system. The scattered particles were collimated by a double set of slits of width 0.045 inches. The photographic plates were set at an angle of approximately 12° to the axis of the slits. The incident proton beam was collected in a Faraday cup and integrated by a precision capacitor and a slide back voltmeter. The number of scattering nuclei was determined by measuring the temperature and pressure of the helium gas admitted to the scattering chamber.

Particular mention should be made of the advantages of the geometry of the scattering chamber. Any uncertainty in solid angle is eliminated by the definite geometry provided by the slits. The plate holder provides definite reproducible geometry for the photographic emulsion plates. Finally the measurement of the yield at each angle involves only counting the number of tracks on the plate in a swath of known width and which satisfy certain selection criteria. The swath width is defined by an eyepiece reticule in the microscope.

A preliminary curve has been calculated and is shown in Fig. 1. Approximately 500 tracks were used for each point giving a statistical error of ± 4 percent. The inherent errors in measuring the number of tracks per centimeter swath on the plate, in geometry accuracy, in integrated current and in number of scattering nuclei gives an approximately RMS error of 3.1 percent. For the final curve more angles will be measured, particularly in the forward direction, and approximately 2500 tracks will be used for each point.

---

[1] LA 1088 - Nuclear Multiple Plate Camera, Allred et al.

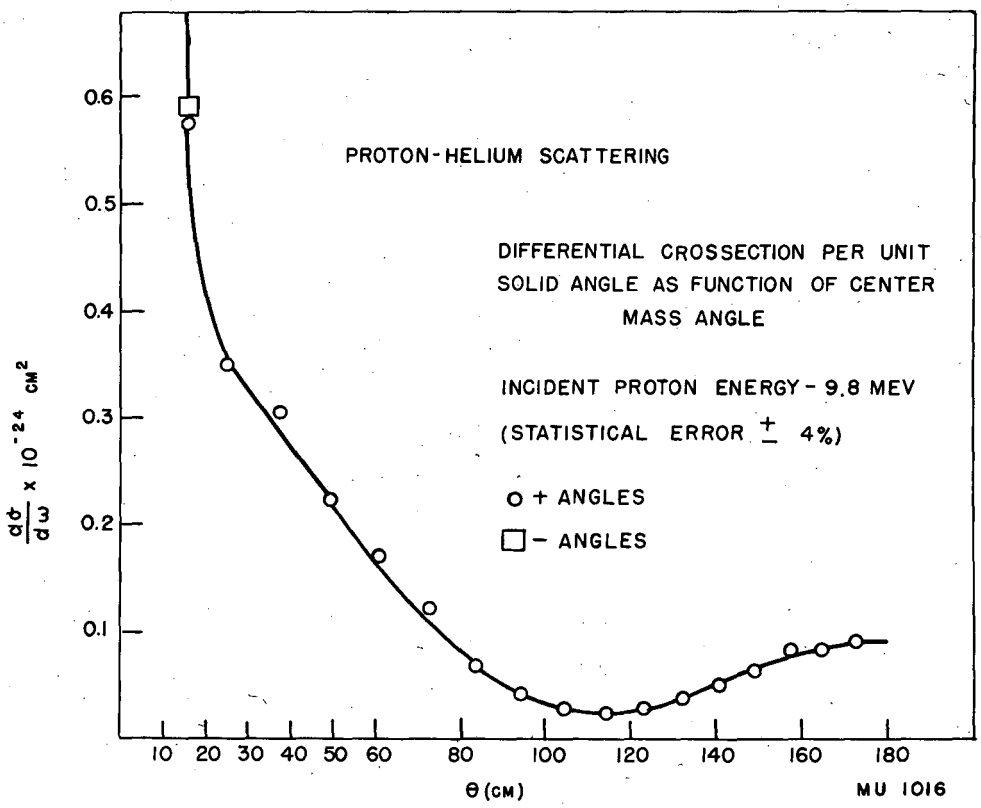
PROTON-HELIUM SCATTERING
DIFFERENTIAL CROSSECTION PER UNIT SOLID ANGLE AS FUNCTION OF CENTER MASS ANGLE
INCIDENT PROTON ENERGY - 9.8 MEV
(STATISTICAL ERROR ± 4%)
o + ANGLES
□ − ANGLES
0.6
0.5
0.4
0.3
0.2
0.1
$\frac{d\sigma}{d\omega} \times 10^{-24}$ CM^2
10 20 30 40 50 60 80 100 120 140 160 180
θ (CM)
MU 1016

Fig. 1

13. Crystal Gamma Counter

Kenneth D. Jenkins

Work has continued on the scintillating crystal gamma counter for tracer work. By proper selection of the 5819 photomultiplier tube and the proper placing of the ThI activated NaI crystal, the counter will count one-third of all the gamma disintegrations of all energies down to ten kilovolts without any thermo or electronic tube noise being introduced.

Counter Tube and Crystal Geometry. Several important facts are very evident from recent tests:

1. A thalium activated sodium iodide crystal gives the best results over the widest range of gamma energies.

2. The light output is linear for all energies checked between 8 kv and 1.3 Mev.

3. Getting the crystal as close to the tube face as possible and using dry oil for all air spaces between the crystal and the tube face also improves the performance.

4. For a clearer, more evenly shaped and smaller crystal, the threshold for a given energy is sharper and the plateau flatter.

5. Selection of the photomultiplier tube is very important for measuring low gamma energies as the sensitivity to noise ratio varies by a factor of ten between tubes.

6. The lower the voltage on the photomultiplier tube, the lower the equivalent energy of the thermo and electronic noise. Values as low as 500 volts have been reached, while values below 5 kv are readily maintained.

Preamplifier. The pulse gain of a photomultiplier tube is proportional to its output capacitance. In most conventional circuits, the output capacitance is about 20 micromicrofarads. By using a cathod follower on the output and connecting the tenth dynode to the output of the cathode follower, the output capacitance of the photomultiplier tube can be held to about 5 micromicrofarads. This reduction in capacitance gives a gain of about four, thus the voltage on the photomultiplier tube can be reduced, lowering the thermo noise without lowering the output voltage.

Differential Input Circuit. The use of a differential input to the counter is a great help in many tracer studies as it makes it possible to determine the relative quantities of two or more isotopes that have different gamma energies. The easiest system is to use two start-stop multivibrators, one of which has an adjustable input threshold. The outputs of the multivibrators are connected in anti-coincident. The counter can then be adjusted for different energies by varying the photomultiplier tube voltage.

Regulated High Voltage Supply. A simple method was devised to obtain a regulated voltage for the photomultiplier tube with a minimum of added

equipment. The voltage required should be a negative voltage adjustable between 300 volts and 800 volts. However, it is desirable that the standard voltage be obtained from the regular positive plate power supply because of the high current drawn by the voltage regulator tube. Fig. 1 is a schematic of the circuit used to achieve these features.

The circuit is similar to a half-wave voltage doubler with a pentode replacing the dumping diode. The dc path is through the load, the 2X2 rectifier, and back through the 6AC7 to the load. Thus, the 6AC7 is a series regulator tube. The 6AC7 controls the dc voltage across C_1, thereby controlling the output voltage. The dc voltage across C_1 can be made to reverse, making it possible to vary the output voltage from zero to twice the peak input voltage. At an output voltage of 600 volts, the loop gain of the circuit is about fifty. The circuit as is does not degenerate the ac on the output voltage, but, if an extra diode were placed between C_1 and the anode of the 6AC7, and the filter condenser (C_2) were returned to the plate of the 6AC7 instead of ground, the circuit would degenerate the ac on the output voltage. Because of the low current drain on the supply and, since the anode of the photomultiplier tube is operated at ground potential, extensive filtering of the high voltage is not necessary.

Conclusion. A complete counter was built employing all the aforementioned features, low output capacity of the photomultiplier tube, differential input, regulated high voltage supply, and a precision counting rate meter for counts from one count per second to ten thousand counts per second. The unit exclusive of the photomultiplier tube is housed in a 16 in. x 8 in. x 8 in. cabinet. A typical set of curves of counts per second versus photomultiplier tube gain (volts per stage) for different gamma energies is given in Fig. 2.

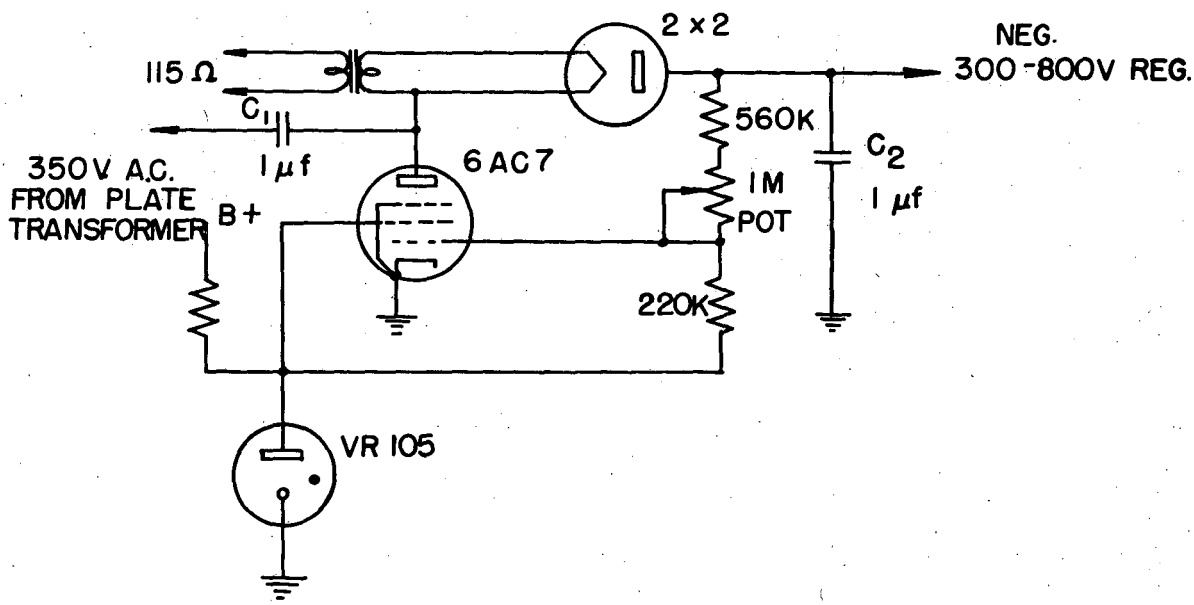
2 x 2
NEG.
300-800V REG.
115 Ω
C1
1 μf
560K
C2
1 μf
350V A.C.
FROM PLATE
TRANSFORMER
B+
6AC7
1M
POT
220K
VR 105

FIG. 1

MU 2094

CRYSTAL COUNTER ENERGY THESHOLD

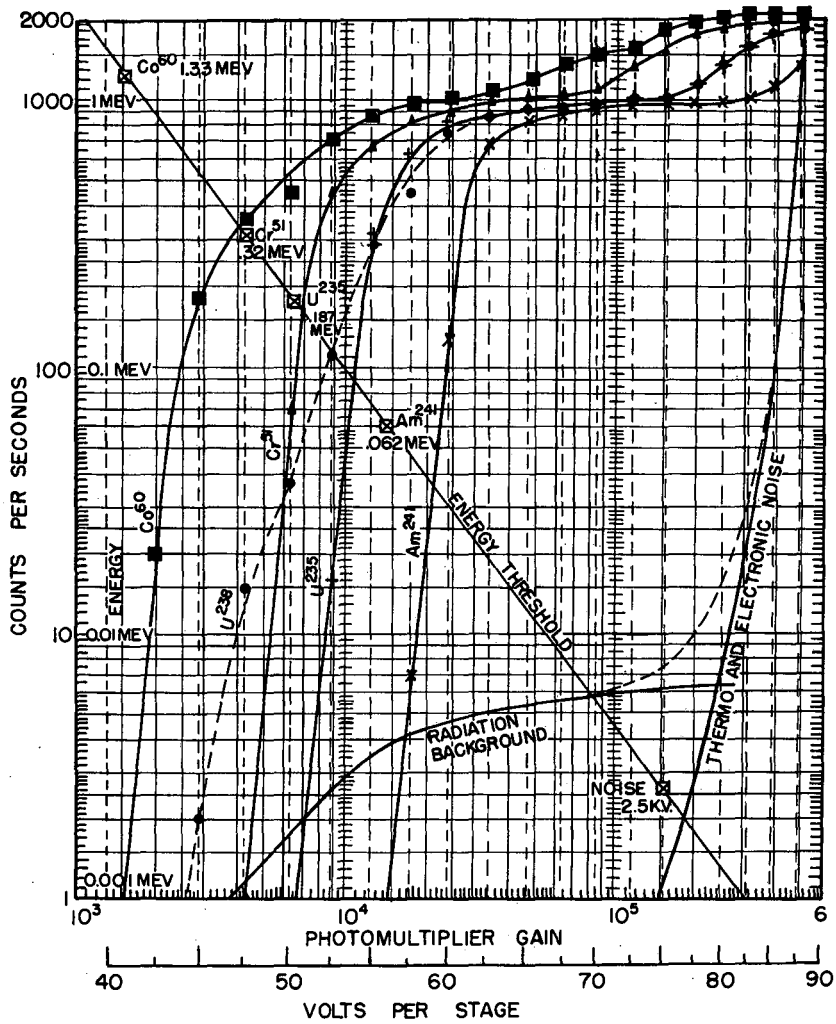

FIG. 2

MU 2074

14. Synchrotron Studies

A. C. Helmholz

The previous quarter closed with an experiment by M. Jakobson and R. S. White on photoproduction of mesons in deuterium and hydrogen. The analysis of this experiment has been completed during the past quarter and shows that the π^+ production in deuterium is definitely less than in ordinary hydrogen. Data from the nuclear plates exposed show that the π^+/π^- ratio is approximately 1 from deuterium. The data is not accurate enough to give the ratio in the π^+ production of processes in which the spin of the proton is flipped to those in which the spin is not flipped and the neutrons must be at least put into a p state. The detailed results can be found in reports by White and Jakobson.

The experiment on production of pairs of μ mesons by E. Martinelli, R. Mather, and W. Jarmie was terminated. The experimental results indicated no production, but the limit of the cross-section as determined experimentally is not so low as the theoretically expected value from simple electro-magnetic considerations, so it did not seem worthwhile to push the limit farther. The same group has built up equipment for the detection of high energy neutrons such as one might expect from π^- capture. The equipment consists of large proportional counters and can also be used for measuring high energy protons.

Progress on the neutral meson production in hydrogen has been disappointingly slow. The main difficulty has been with the liquid scintillation counters, particularly in determining their efficiency. Apparently, they are not nearly equally sensitive over their whole area. Some acual runs should be made in the next few months, provided the synchrotron can be operated at good efficiency.

Several other experiments have been in the instrumentation stage during the past quarter. W. Gilbert's work on the photodisintegration has progressed slowly. The use of a neutron counter in coincidence with the proton telescope has undergone a preliminary test and operates but with low efficiency. At present, it seems that direct counting of the protons alone may be just as good. Variation in pulse size from counts of protons going through different portions of the liquid scintillation counter have been a difficulty, partly solved by the use of several multiplier tubes looking at the same counter.

The cloud chamber group has also been setting up experiments, and arrangements have been made so they can work without shutting down the synchrotron. Some of their experiments should start in the next quarter.

The pair magnet has been put in operation and placed on a rotating base, so that measurements of γ-ray energies at angles to the beam can be made. W. Blocker has used the pair magnet for measurements of the electrons and γ-rays in coincidence from the Compton process. Again results should be forthcoming from this experiment in the next few months.

J. E. Carothers and L. Neher have made measurements of π^- and π^+ meson yields by measuring the time of flight of mesons whose $H\rho$ has been measured by their paths in the pair magnet. Some of the difficulties in this experi-

ment have been with intensity since it requires a long path to measure the time of flight, with consequent decrease in solid angle.

R. Madey and R. Hales have made a numberof runs measuring neutral meson yields from different elements. The equipment has been in use at the cyclotron also. A number of other experiments are under way, and have used synchrotron time, but essentially there are no results from them to report at present.

15. Theoretical Physics

K. M. Watson

An analysis of meson production in complex nuclei has been made and is at present being applied to experimental results from carbon. The purpose of the method is to obtain information concerning nuclear structure.

A study of experiments involving the scattering and absorption of mesons has been made. A model has been proposed, suggesting that the absorption in complex nuclei can be related to meson production experiments.

A theoretical analysis of π^0 meson production in deuterium is being conducted. The purpose is to be able to deduce the $(p,n \longrightarrow \pi^0)$ cross section from $(p,d \longrightarrow \pi^0)$ experiments now in progress at this laboratory.

A study of (d,n) angular distributions has been completed. The effect of nuclear interactions on range-energy relations has been investigated. An analysis of the scattering of high energy protons from carbon is in progress.

II ACCELERATOR OPERATION AND DEVELOPMENT

1. 184-inch Cyclotron Operation

J. Vale

The emphasis at the 184-inch cyclotron is still on steady operation for research experiments; consequently practically no new equipment has been installed. Approximately 96 percent of the time that the operating crew was on duty was used for research experiments. The other 4 percent of the time was used for minor operational troubles such as ion source filament changes and magnet generator overhaul.

2. 60-inch Cyclotron Operation

G. Bernard Rossi

Operation. The distribution of available time this quarter for 60-inch cyclotron operation is as follows:

Alpha bombardment		335.7 hrs
Deuterium bombardment		540.8 hrs
Proton bombardment		197.6 hrs
Carbon bombardment		141.2 hrs
	Total Bombardment	1215.3 hrs
Experimental Operation		51.7 hrs
	Total Operation	1267.0 hrs
Outage		333.5 hrs
	Available Time	1600.5 hrs
Shutdown		455.7 hrs
Holidays		32.0 hrs
Radiation decontamination		46.8 hrs
Daylight saving time change		1.0 hrs
	Total Time	2136.0 hrs

During this quarter two new probes were installed in the 60-inch cyclotron. One was designed to monitor the internal beam at the deflector radius of 25 inches, having a range of 23 inches - 26-1/2 inches from geometric center of the vacuum tank; the other probe was designed to move along the axis of the dees both vertically and horizontally. Both probes were designed to monitor the beam electronically rather than by indirect thermal means.

The beam monitoring probe (Fig. 1) was designed to be operated remotely through a Wilson seal arrangement and is inserted down the inside of the east dee stem. This location was chosen to provide an rf field free region for the probe to work in; thus, eliminating rf pickup. It is 15 feet in overall length and is driven by an aviation "Flap" motor from the control desk. Functionally, the probe is used to determine the gross deflector efficiency by measuring the internal beam intensity prior to deflection. This will aid in determining whether the deflector or ion source should be placed under suspicion during times when low beam output is experienced. So far, the data collected indicates an efficiency of about 10 percent is to be expected under average running conditions; i.e., if the internal beam is measured to the 100 ua at the 24-1/2 in. radius, then 10 ua of deflected beam is to be expected. As yet, time has not permitted attempts to increase the deflection efficiency by shimming, deflector or dee adjustments, and ion source positioning.

The axial probe was prepared to facilitate internal bombardments with carbon particles. It was designed to fit into the former north viewing port and is adjusted manually. Part of the installation included designing a fast operating and easily removed vacuum lock for removing probes after bombardment. Time checks indicate that a sample can be removed from the tank and placed under a counter within 40 seconds after bombardment - the regular internal beam probe requires about 7 minutes.

Section B of Fig. 2 is a Wilson seal section held on the system with a quick acting clamp. This section is removed with the probe after bombardment. Section A is a removable section that forms, with the gate, a vacuum lock for the probe. This section was made removable so that it might be replaced with a window to allow viewing the dees while the probe is not in use.

The probe head, shown in Fig. 3, has a monitoring foil in a copper box with rf shielding. Two surfaces of the box were removed and covered with thin foils to allow the beam to penetrate to the monitoring foil. The wall foil was made thin to eliminate loss of beam. C. Gordon and A. Ghiorso worked out the design and fabrication of the unit.

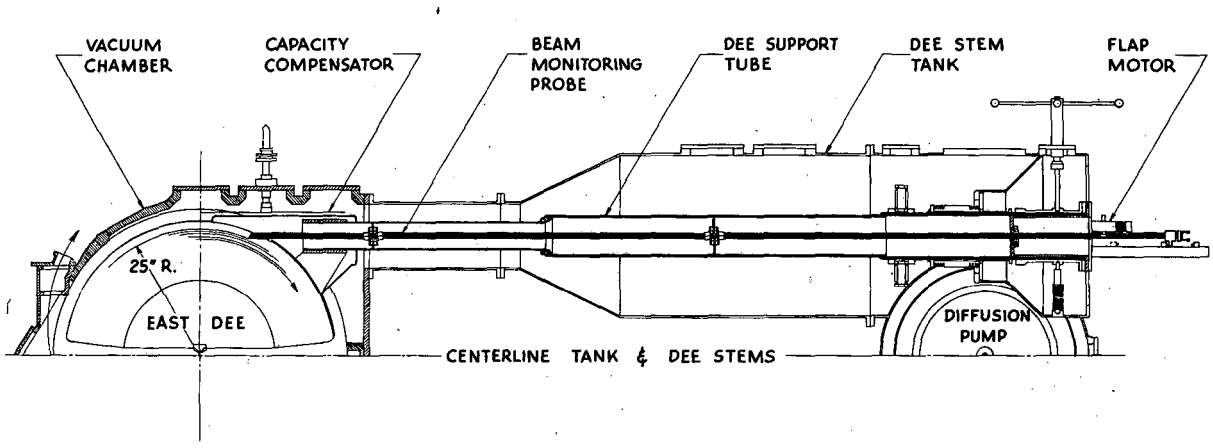

BEAM MONITORING PROBE

FIG. 1

MU 2069

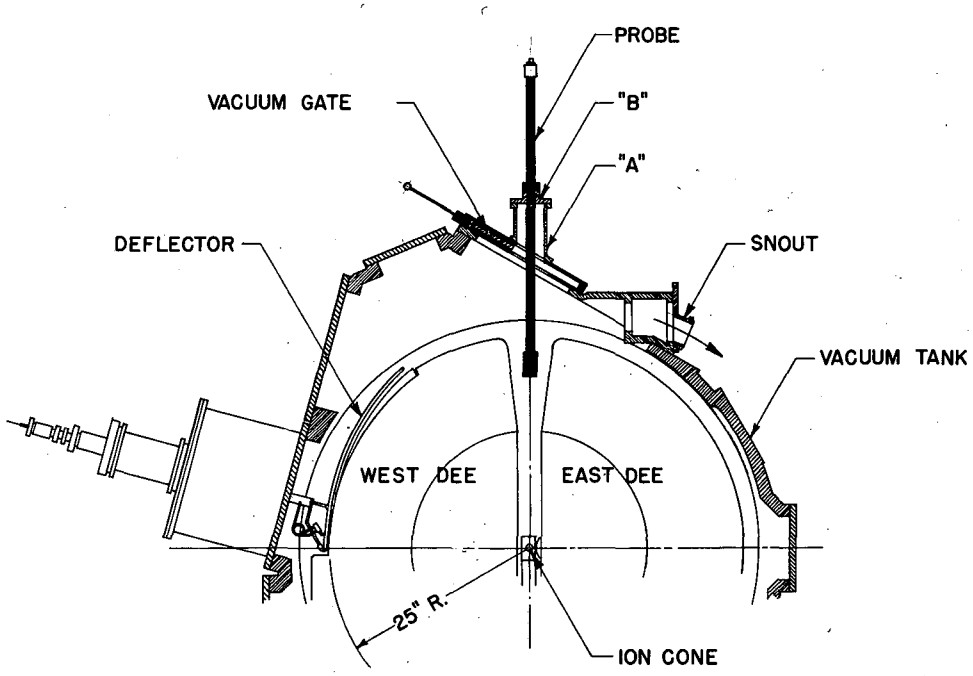

AXIAL PROBE

FIG. 2

MU 2070

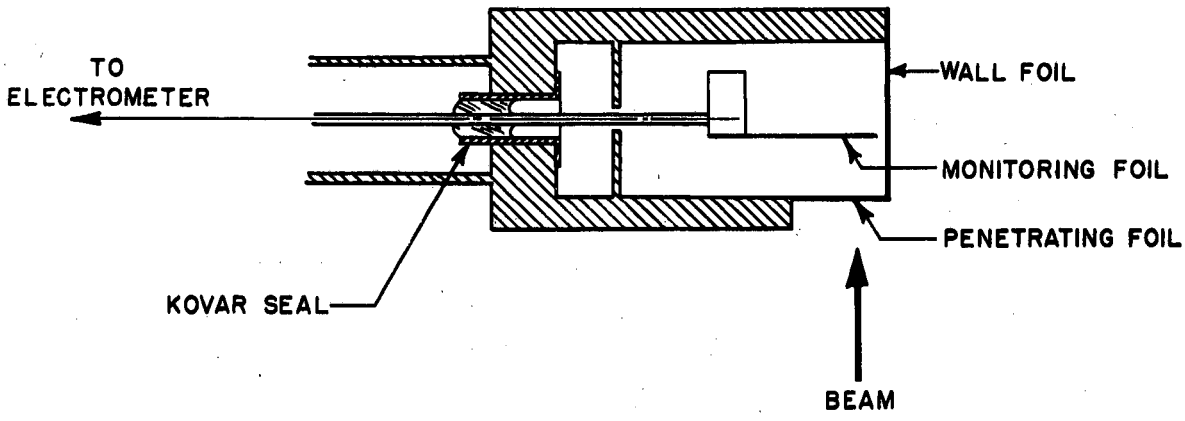

AXIAL PROBE HEAD

FIG. 3

MU 2071

3. Synchrotron Operation

George C. McFarland

During this past quarter, the synchrotron has been used for physics research with little time devoted to development of the synchrotron itself. Some devices that had been temporarily installed have been permanently located and wired.

The 22-ton pair spectrometer used for experiments with the synchrotron has been equipped with a rotating base. This rotating base will enable the long length of the spectrometer field to be aligned with the synchrotron beam or at right angles to it as is required.

The first of a series of degaussing shields has been added to the pair spectrometer to minimize the effect of field interaction between the synthrotron and the pair spectrometer.

A secondary lead collimator, 4 inches thick, with a series of plugs that can be changed to vary the degree of collimation has been installed. This collimator is designed to clean up the beam after it has undergone primary collimation.

In general, during this report period, the synchrotron has been run at a good intensity level and has been trouble free with the exception of a two-day shutdown due to the failure of the rf pulse modulator.

4. Linear Accelerator and Van de Graaff Machines

L. Alvarez

During the early part of this quarter, a large fraction of the time was devoted to checking and testing the oscillators. Considerable trouble was encountered from oscillator tube sparking caused by the high dc plus rf total voltage. In an effort to reduce the rf voltage, the loop sizes were decreased. The operating percentage before and after changing the loops, was 57 percent and 84 percent, respectively.

The overall running time for the linear accelerator averaged about 65 percent, with the balance spent in repairs, bake-in, installation of new equipment and in machine research in an attempt to improve the operating efficiency.

The buncher program is underway, and parts for it are being constructed in the shops.

5. Bevatron Development

W. M. Brobeck

The magnet power supply wiring has been completed and both motor generator sets have been run without load. Voltage has not yet been applied to the rectifier-inverter.

Magnet coil winding started March 12 and by the end of April 70 percent of one quadrant or 17 percent of the total coil had been wound. The rate of winding indicated that completion could be expected in October or November.

The sample vacuum tank section has pumped down to a satisfactory pressure and gas evolution tests have been started. All the design problems appear to be solved and drafting on the full length tank is proceeding.

Procurement of the pole tips has not yet started and no further work was done on the injector or air filter installation during the period. It is hoped that the rate of progress can be accelerated as more personnel is now available but allowance must be made for the fact that most of the engineering personnel on the bevatron have been recently hired and are comparatively inexperienced.

LMM/7-9-51
Information Division