copy 2

UCRL- 1395

UNCLASSIFIED

UNIVERSITY OF CALIFORNIA — BERKELEY

TWO-WEEK LOAN COPY

This is a Library Circulating Copy which may be borrowed for two weeks. For a personal retention copy, call Tech. Info. Division, Ext. 5545

RADIATION LABORATORY

DISCLAIMER

This document was prepared as an account of work sponsored by the United States Government. While this document is believed to contain correct information, neither the United States Government nor any agency thereof, nor the Regents of the University of California, nor any of their employees, makes any warranty, express or implied, or assumes any legal responsibility for the accuracy, completeness, or usefulness of any information, apparatus, product, or process disclosed, or represents that its use would not infringe privately owned rights. Reference herein to any specific commercial product, process, or service by its trade name, trademark, manufacturer, or otherwise, does not necessarily constitute or imply its endorsement, recommendation, or favoring by the United States Government or any agency thereof, or the Regents of the University of California. The views and opinions of authors expressed herein do not necessarily state or reflect those of the United States Government or any agency thereof or the Regents of the University of California.

UCRL-1395
Unclassified-Physics Distribution

UNIVERSITY OF CALIFORNIA

Radiation Laboratory

Contract No. W-7405-eng-48

HEAVY ELEMENT DECAY SCHEMES WITH ALPHA-GAMMA AND ALPHA-ELECTRON COINCIDENCE COUNTING

Charles Anton Prohaska

(Thesis)

August 1951

Berkeley, California

TABLE OF CONTENTS

	Page
I. INTRODUCTION	4
II. APPARATUS	13
A. Alpha-Electron Coincidence Counter	13
B. Alpha-Gamma Coincidence Counter	18
III. EXPERIMENTAL	20
A. Americium^{241}	21
B. Curium^{242}	24
C. Thorium^{230}	25
D. Protactinium^{231}	27
E. Plutonium^{239}	29
F. Uranium^{233}	30
G. Uranium^{234}	32
H. Polonium^{208,209,210}	33
I. Summary of Internal Conversion Coefficients	33
IV. ACKNOWLEDGMENT	36
V. REFERENCES	37

HEAVY ELEMENT DECAY SCHEMES WITH ALPHA-GAMMA AND ALPHA-ELECTRON COINCIDENCE COUNTING

Charles Anton Prohaska
Radiation Laboratory and Department of Chemistry
University of California, Berkeley, California

ABSTRACT

An apparatus for measuring alpha-gamma and alpha-electron coincidences has been put in operation. This apparatus is described.

From data obtained with this apparatus, decay schemes are postulated for Am^{241}, Cm^{242}, Th^{230}, Pa^{231}, U^{233}. Coincidence data on Pu^{239}, U^{234}, and $Po^{208,209,210}$ are also presented.

HEAVY ELEMENT DECAY SCHEMES WITH ALPHA-GAMMA AND ALPHA-ELECTRON COINCIDENCE COUNTING

Charles Anton Prohaska
Radiation Laboratory and Department of Chemistry
University of California, Berkeley, California

I. INTRODUCTION

The use of coincidence counting methods has been an important tool in experimental physics for a long time. Originally used in the study of cosmic rays, coincidence counters have also been used with great success in other fields of nuclear physics.

Briefly, a coincidence counter consists of two (or more) detectors, with appropriate circuits such that, theoretically, a count is registered only if all the detection devices are activated simultaneously. However, it takes a finite time for a detector to be activated, and the detector remains activated for a finite time. Therefore, coincidence counters actually register a count whenever all the detection devices are activated within a small measurable time, usually denoted by τ. In many instances, this time is variable, so that one coincidence counter may be used for various types of investigations.

Coincidence counters may be divided into two important types:

1. The <u>same</u> event activates all the detectors.

2. Each detector is activated by a separate event, all occurring within the time τ.

An important use of the first type is in the study of cosmic rays, while the second type is used extensively in studying radioactive decay processes. Before discussing the apparatus used in these investigations, a few

general remarks concerning coincidence counters should be made.

A coincidence counter may be designed to count simultaneous events in any number of detectors. In most work, however, two detectors are all that are necessary. The following discussion will, therefore, be limited to coincidences between events activating two detectors.

In general, a coincidence counter is used to distinguish between related events and unrelated events. For instance, it may be desired to distinguish particles traveling in one direction from particles traveling in another direction . Two (or more) detectors are set up along a line in the desired direction. A particle traveling in this desired direction, then, if it goes through one detector, will go through the other detector, and will activate both, registering as a coincidence. Particles traveling in any other direction could go through one detector or the other, but not both. Both detectors would not be activated, hence a particle traveling in any other direction would <u>not</u> register as a coincidence.

However, if unrelated random events are activating each detector separately, a certain number of "chance" coincidences would be registered by the coincidence counter. This is because the coincidence counter counts events occurring within a small, finite time. There is always a finite chance, then, that any two random events will occur within this small, finite time, and hence register as a coincidence. The frequency of these "chance" coincidences may be calculated from statistical considerations.

In most coincidence counters, when a detector is activated, this event is translated into an electrical pulse. These pulses are what

actually go to the coincidence counter. They also usually go to a scaling circuit, where the number of pulses from each detector is counted separately. Before proceeding further, let us define some terms. Let

N_1 = number of events detected by detector (1) in unit time

N_2 = " " " " " " (2) " " "

τ_1 = duration of electric pulse coming from detector (1)

τ_2 = " " " " " " " (2)

τ is known as the "resolving time" of the circuit. Suppose we make a plot of voltage versus time for the pulses from the two detectors.

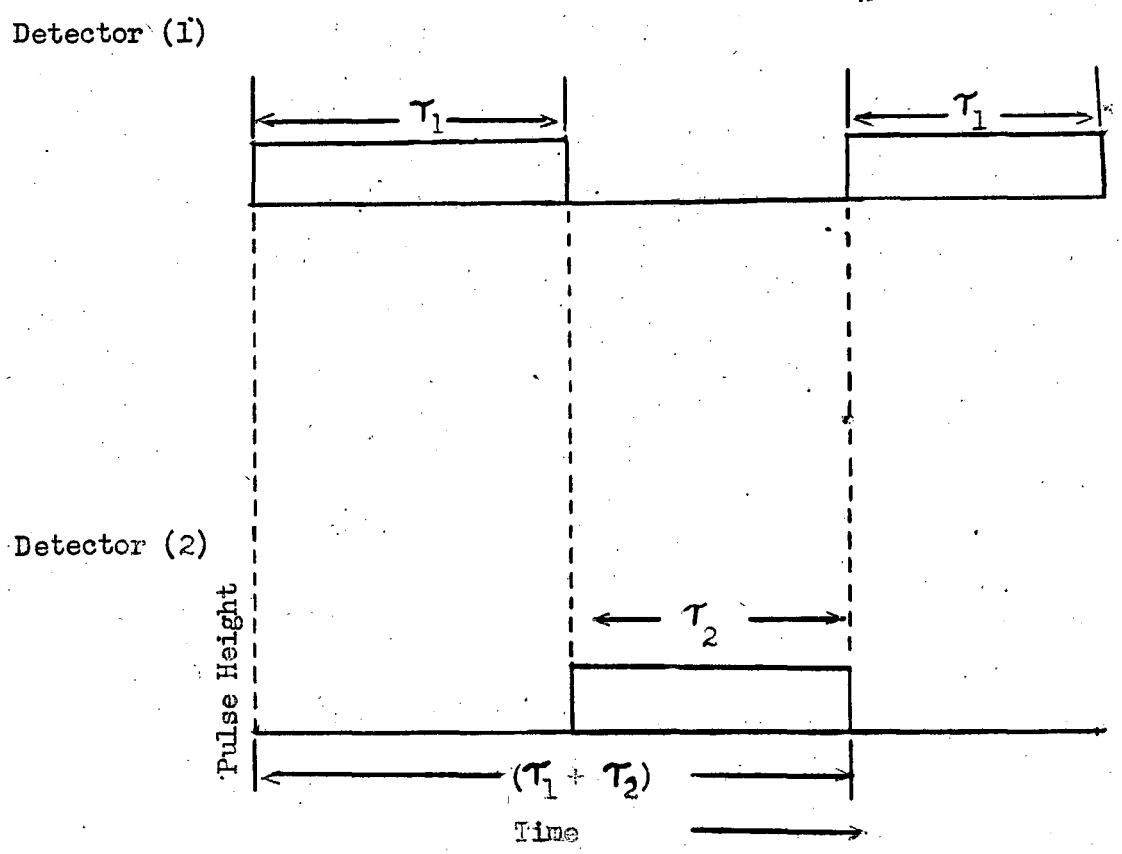

If a pulse appears from detector (1), no coincidence will be recorded as long as no pulse appears from detector (2) during the time τ_1. Similarly, if a pulse appears from detector (2), no coincidence will be recorded as long as no pulse appears from detector (1) within the time τ_2. If, however, a pulse appears from detector (2) within the time τ_1 that a pulse has appeared from detector (1), or vice versa, a coincidence will be recorded. The frequency of these "chance" coincidences is given by the relation[1,2]

$$A = (\tau_1 + \tau_2)N_1N_2$$

where A is the chance coincidence recorded per unit time. This relation may be derived from Poisson's Law, and has been verified experimentally.

When a coincidence counter is used in the determination of decay schemes, as in the present work, it would be included in type 2, i.e., each detector is activated by a separate event, both occurring in the time τ. The event activating the detector is the emission of a nuclear particle or radiation. In such work, the observed coincidence rate consists of three parts:

1. "True Coincidences," i.e., two related particles, or radiations, emitted within the time τ by the same nucleus.

2. "Chance Coincidences," i.e., two unrelated particles, or radiation, emitted within the time τ by two separate nuclei.

3. Coincidences of type 1, i.e., the same particle or radiation activating both detectors. This type of coincidence is caused primarily by cosmic rays and is sometimes called "Cosmic Background." The chance coincidence rate and the cosmic background must be subtracted from the

observed coincidence rate to give the true coincidence rate.

The true coincidence rate depends directly upon the sample strength. If the amount of sample is doubled, the single count rate in both detectors, as well as the coincidence rate, will be doubled.

The chance coincidence rate, on the other hand, depends upon the square of the sample strength. Doubling the amount of the sample increases the chance coincidence rate by a factor of four.

The cosmic background is essentially constant as long as the arrangement and location of the detectors remain unchanged.

It can be seen, then, that there will be some optimum sample strength for use in a coincidence counter. If the sample is too weak, the cosmic background becomes large compared with the true coincidence rate, while if the sample is too strong, the chance coincidence rate becomes large compared with the true coincidence rate. It might be well to carry this a little further. The discussion presented below follows Dunworth[1] very closely.

Consider a simple coincidence experiment in which N nuclei decay in unit time, with the emission of two particles, p_1 and p_2. Let two detectors be arranged close to the source, and suppose detector (1) detects $N\varepsilon_1$ particles of type p_1, in unit time, and none of type p_2. Let Q_1 be the single counting rate for detector (1) due to other causes.

Let $N\varepsilon_2$ and Q_2 be the corresponding quantities for detector (2).

Let:

T = time of count

C = cosmic background

G = true coincidence rate

A, N_1, N_2, τ_1, τ_2 are defined as before.

ε_1 and ε_2 are the respective counting efficiencies for detector (1) and detector (2). Counting efficiency here means the fraction of the total number of particles of type p_n detected by detector (n), i.e., ε is defined by the equation

$$\varepsilon_p = \frac{1}{4\pi} \int_0^{4\pi} e_p \, d\alpha$$

where e_p is the efficiency of the detector for particle of type p proceeding outward from the source in a solid angle $d\alpha$ in some direction, and the integration is to be carried out over all such elements of the solid angle.

Then

$$N_1 = N\varepsilon_1 + Q_1$$

$$N_2 = N\varepsilon_2 + Q_2$$

$$A = (\tau_1 + \tau_2) N_1 N_2$$

$$G = N\varepsilon_1\varepsilon_2$$

The total coincidence rate is given by (G + C + A), and will be subject to a statistical error given by

$$\frac{\left[T(G + C + A)\right]^{1/2}}{T}$$

The fractional error, f, in the true coincidence rate G is:

$$f = \left[\frac{G + C + A}{T}\right]^{1/2} \times \frac{1}{G}$$

assuming the error in C and A is sufficiently small.

Substituting for G, A, N_1, N_2

$$f = \left[\frac{C + N\varepsilon_1\varepsilon_2 + (\tau_1 + \tau_2)(N\varepsilon_1 + Q_1)(N\varepsilon_2 + Q_2)}{T}\right]^{1/2} \times \frac{1}{N\varepsilon_1\varepsilon_2}$$

therefore,

$$f = \frac{1}{T^{1/2}}\left[\frac{1}{N\varepsilon_1\varepsilon_2} + \frac{C}{(N\varepsilon_1\varepsilon_2)^2} + \frac{(\tau_1 + \tau_2)}{\varepsilon_1\varepsilon_2}\left(1 + \frac{Q_1}{N\varepsilon_1}\right)\left(1 + \frac{Q_2}{N\varepsilon_2}\right)\right]^{1/2}$$

As N increases, f falls to a limiting value of

$$f = \frac{1}{T^{1/2}}\left[\frac{(\tau_1 + \tau_2)}{\varepsilon_1\varepsilon_2}\right]^{1/2}$$

Since, in general, $C \ll N\varepsilon_1\varepsilon_2$, this limiting value will be approached closely if $N > N_o$, for which the chance coincidence rate equals the true coincidence rate.

Then, if $Q_1 \ll N\varepsilon_1$, and $Q_2 \ll N\varepsilon_2$, we have

$$N_o\varepsilon_1\varepsilon_2 = (\tau_1 + \tau_2)(N_o\varepsilon_1)(N_o\varepsilon_2)$$

whence,

$$N_o = \frac{1}{\tau_1 + \tau_2}$$

The important conclusions to be drawn are that, for a given accuracy f, the time T of coincidence counting approaches the limiting value

$$\frac{(\tau_1 + \tau_2)}{\varepsilon_1\varepsilon_2 f^2}$$

as N is increased, and that no great advantage is obtained by increasing N to a value greater than

$$\frac{1}{\tau_1 + \tau_2}$$

The above argument is based upon the assumption that the error in C and A is sufficiently small. Under experimental conditions, this may not be strictly true. In the present investigation, sample strengths were chosen such that

$$N < N_0$$

$$G \gg A$$

$$G \gg C$$

Under these conditions, the fractional error, f, was greater than the limiting value, but the effect of a possible error in C and A was minimized. C was usually so small as to be negligible.

In determining the decay schemes of radioactive nuclei, the detectors associated with the coincidence circuit may detect alpha particles, beta particles, gamma rays, conversion electrons, or x-rays. Coincidences between any two of these may be investigated. The present investigation has been limited to coincidences between alpha particles and gamma rays, and alpha particles and conversion electrons. In the present work, as well as most previous work, the energies of the electrons and gamma rays have been determined by means of absorption. Abundances are obtained by extrapolating the absorption curves back to zero absorber.

It was found by Schonland[3,4] that monoenergetic electrons are absorbed linearly in aluminum. An aluminum absorption curve, plotted on a linear scale, is a straight line, curved on each end, as shown below. The straight line portion of the curve may be extrapolated to give a "range" in aluminum. These "ranges" are quite reproducible, and vary with the electron energy. A plot of "range" versus energy was made using the data of Schonland.

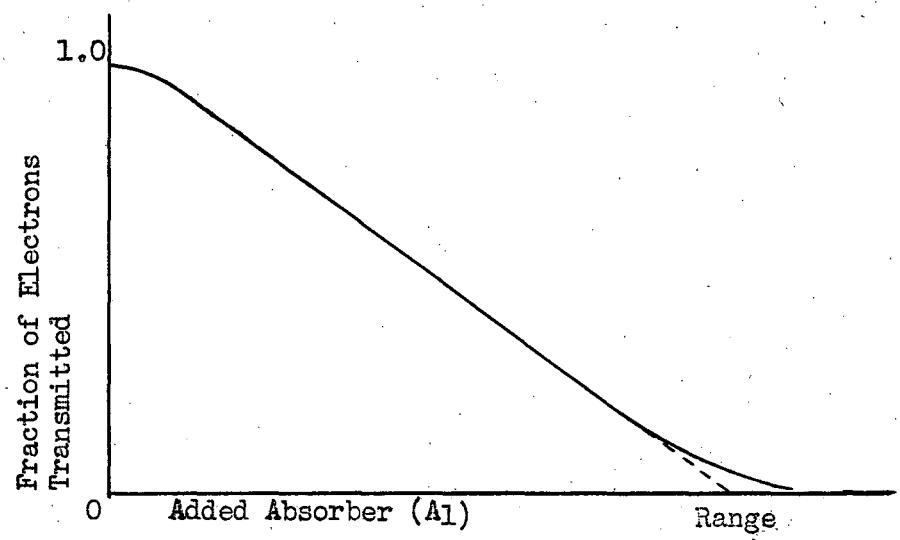

The original absorption data were obtained with a narrow beam of electrons. In the present work, the electrons are dispersed through a considerable solid angle. Under these conditions, the absorption curve may not be linear. However, in the absence of any evidence to the contrary, it is assumed that the conversion electrons will be absorbed linearly, and that their energy can be obtained from their "range" in aluminum.

Energies obtained by absorption are not too accurate, and, in the case of soft conversion electrons, the error in the energy and the abundance might be very large. The accuracy of the present apparatus is limited by the uncertainty in the energies and abundances of the gamma rays and electrons. The alpha-gamma coincidence data are more reliable than the alpha-electron coincidence data.

Until a more precise method of measuring the energy of soft electrons is available, the accuracy of the alpha-electron coincidence data is

limited. However, with the recent advances in the design of pulse analyzers[5] for gamma rays, as well as alpha particles, much more precise alpha-gamma coincidence work is possible. It should be a simple matter to investigate coincidences between alpha particles and gamma rays of a particular energy. Also, coincidences between gamma rays of one energy and gamma rays of another energy may be investigated, to determine whether the two gamma rays are in cascade. These problems are being considered at the present time.

II. DESCRIPTION OF THE APPARATUS

Two types of measurements may be made using this apparatus, alpha-electron coincidences and alpha-gamma coincidences. A photograph of the complete apparatus is shown in Figure 1. A block schematic diagram of the apparatus arranged for measuring alpha-electron coincidences is shown in Figure 2, while the arrangement for measuring alpha-gamma coincidences is shown in Figure 3. It can be seen that several components are common to both arrangements of the apparatus. Each arrangement will be discussed separately.

A. Alpha-Electron Coincidence Counter

In this arrangement, both the alpha particles and the electrons are counted by means of a proportional counter. Each proportional counter tube is made from brass tubing, one and one-half inches in diameter and three inches long, with a one inch circular window located in the side of the tube midway between the ends. A disk of teflon, with a small hole in the center, is fitted in each end of the tube. The collecting anode,

0.005 inch Kovar wire, is stretched between the two small holes in the teflon ends. The window is covered with a grid, also made from 0.005 inch Kovar wire, in order to define the electric field within the tube. A photograph of these tubes is shown in Figure 4.

The tubes are placed 13/16 inches apart, with the windows facing each other. The sample, mounted on a thin tygon film, is placed midway between the two tubes. Alpha particles are counted in the tube on the opposite side of the tygon film from the sample (i.e., the alpha particles pass through the film) while the electrons are counted in the tube on the same side of the tygon film as the sample. The geometry of this arrangement is about 13 percent, and is the same on both sides.

The two tubes, with the sample mounted between them are covered with a glass bell jar, and the whole chamber evacuated to a pressure of 5 - 10 millimeters of mercury. Air is admitted until the pressure has increased to 30 millimeters, and the chamber then filled with methane to a total pressure of 350 millimeters of mercury. It was found that if the chamber was evacuated and filled with 350 millimeters of pure methane, the count rate of a sample slowly changed with time, for a period of ten to twenty minutes after the high voltage was turned on. This effect was eliminated by using the mixture of air and methane described above.

350 millimeters of this air-methane mixture has a density of approximately 0.5 mg/cm^2 at room temperature, and this figure has been used in extrapolating absorption curves to zero absorber.

The high voltage must be off before the chamber is evacuated, otherwise arcing will occur as the pressure is decreased. Should this

occur while a sample is in the chamber, the tygon film upon which the sample is mounted will probably break, contaminating the chamber and ruining the sample.

The collection anodes of the proportional counter tubes must be kept free from dust or other particles, to reduce the background. A speck of dust caught on an anode can, by means of corona effect, cause extremely high backgrounds. Since the chamber must be opened to the atmosphere each time an absorber is added or changed, it is impossible to prevent dust particles from getting caught on the anode occasionally. When this occurs (i.e., when the background becomes too high) the anode must be replaced.

The negative pulses from the chamber are fed to a preamplifier where they are amplified and limited. As can be seen from Figure 5, the leads from each proportional tube to the preamplifier are carefully shielded. It was found that without this shielding, pulses from one channel were being picked up electrostatically by the other channel. These pulses, appearing on both channels, registered as a coincidence. This effect was eliminated when the leads were shielded as shown.

Since no feedback is incorporated in this preamplifier, the gain is strongly dependent upon the age and condition of the 6AC7 tube (see circuit diagram, Figure 6). The operating potential of the collection anode depends upon the gain, hence it is also dependent upon the condition of this 6AC7. Plateaus must be run very frequently to insure operation at the correct potential. Under normal operating conditions, the collection anode voltage for counting alpha particles is between 2400 and 2500 volts and for counting electrons, between 3100 and 3400 volts.

When counting alpha particles, or electrons from a pure beta emitter, no limiting action occurs in the preamplifier. When counting electrons in the presence of alpha particles, the pulses from the alpha particles will be limited. The height of these limited pulses is determined by the voltage on the grid of side 2 of the 6J6 tube. This voltage can be adjusted by means of the half megohm potentiometer to which the grid is connected.

For best results, it was found that this grid voltage should be such that the maximum pulse height at the output of the preamplifier is 17 - 18 volts. This can be done very simple by setting the collection anode voltage at about 3.2 kilovolts, i.e., the proper voltage for counting electrons, and observing the pulses from alpha particles in an oscilloscope. These pulses will limit, and their height can be set to 17 volts by adjustment of the half megohm potentiometer. This adjustment must be checked frequently.

In practice, both the operating potential of the collection anode and the pulse height adjustment should be checked each time an absorption curve is made.

From the preamplifier, the pulses are fed to another amplifier, (Figure 7), where they are further amplified, and then go to the pulse shaping circuit (Figure 8). The output of the shaping circuit is a very sharp pulse, about 0.7 microseconds wide at the base of the pulse. This sharp pulse goes to the delay circuit (Figure 9) where a delay varying from 0.4 microseconds to 6000 microseconds may be introduced. This delay circuit can be bypassed if no delay is desired.

The pulse now goes to the variable gate circuit (Figure 10) where it is broadened. The pulse out of the gate circuit is square, and its width may be varied from 2 microseconds to 2000 microseconds. The output of this gate circuit is fed to a scaler, where the number of pulses is counted, and also to the mixing circuit.

The preamplifier, amplifier, delay, and gate circuits each consist of two identical, separate channels, one for the pulses from the alpha particles, and one for the pulses from the electrons. A separate scaler is provided for each channel. Pulses from the gate of one channel are fed to one control grid of a 6L7 mixing tube, and pulses from the gate of the other channel are fed to the other control grid. Only when a pulse arrives on each grid simultaneously will a pulse occur in the output of the 6L7. This output of the 6L7 is further amplified, and then fed to a third scaler, where the number of coincidences is counted.

In the channel set to count alpha particles, no electrons are counted, but in the channel set to count electrons, the alpha particles will also count. These alpha particles must be subtracted from the single counting rate. However, no alpha particle is in true coincidence with any other alpha particle, therefore the presence of the pulses from alpha particles along with the pulses from the electrons will raise the chance coincidence rate, but will not affect the number of true alpha-electron coincidences.

The high voltage necessary for the collection anodes is supplied by a dual regulated high voltage supply. This supply consists of two channels, each supplying regulated D.C., and each independently variable from

+750 volts to +5000 volts. A single high voltage transformer and rectifier-doubler circuit is used, but each channel has a separate filter and regulator circuit. The circuit diagram of this high voltage supply is shown in Figure 11.

B. Alpha-Gamma Coincidence Counter

In the arrangement for determining alpha-gamma coincidences, the alpha particles are counted using a standard 52 percent geometry, windowless, argon filled chamber. The gammas are counted by means of a scintillation counter.

The top of the alpha chamber is made from 0.001 inch aluminum foil. The sample, usually mounted on a tygon film, is placed in the alpha counter chamber next to this aluminum top. The scintillation counter fits just above the top of the alpha counter chamber. A small space is left between the top of the alpha counter chamber and the bottom of the scintillation counter so that absorbers may be introduced in order to determine the energy of the gamma rays being counted. (See Figures 12 and 13).

The thallium-activated sodium iodide crystal, photomultiplier tube and divider network included in the scintillation counter are all placed in a light-tight brass cylinder with an aluminum cap on one end. This cap is about 0.015 inches thick (approximately 40 mg/cm^2 aluminum) and the gamma rays are counted through the cap. The brass cylinder is wound with 1/4 inch copper tubing which carries water for cooling the photomultiplier tube. (See Figure 13.) High voltage for the photomultiplier tube is obtained from one channel of the dual regulated high voltage supply.

The geometry of the scintillation counter is about 26 percent, while the counting efficiency is approximately 100 percent for 40 - 60 kilovolt gamma rays.

Pulses from the photomultiplier tube are fed to a preamplifier located immediately adjacent to the light tight brass cylinder (Figure 14). From the preamplifier, the pulses go to a linear amplifier, UCRL Model III (Drawing 2T 4404) where they are further amplified, and then to the discriminator (Figure 15).

The discriminator rejects all pulses of less than a certain minimum pulse height. This minimum pulse height depends upon the bias voltage applied to the anode of the 1N43 crystal diode. A battery supplies 45 volts to a 2500 ohm variable resistor in series with a 10,000 ohm potentiometer. By means of the variable resistor, the voltage across the 10,000 ohm potentiometer may be adjusted to 40 volts. The battery voltage will vary with age, temperature, etc., but the voltage across the potentiometer should always be set to 40 volts. Therefore, the bias on the anode of the 1N34 crystal diode, and hence the minimum pulse height, can be varied between zero and 40 volts.

From the discriminator, the pulses travel to the amplifier (Figure 7), only one channel being used, and then to the shaping circuit.

The pulses from the alpha chamber are fed to the alpha-counter amplifier (Figure 16). This amplifier is simply the preamplifier and discriminator circuit of a standard Higginbotham alpha scaler, with some slight modifications. This type of alpha amplifier introduces an appreciable coincidence loss at high counting rates. A coincidence correction was

calculated by the method of Kohman.[6] The output of this alpha-counter amplifier then goes to the shaping circuit.

From the shaping circuit on, the alpha-gamma coincidence circuit is identical with the alpha-electron coincidence circuit.

III. EXPERIMENTAL

The alpha-gamma coincidence counter has been in use for about four months. Considerable difficulty was experienced in getting the gamma scintillation counter to operate properly. The noise level of this counter is abnormally high, and, under the present operating conditions, photons of about 20 kev or less (heavy element L-series x-rays) count very inefficiently. This is probably due to the particular sodium iodide crystal used, since the operating conditions are those found to be optimum for a 5819 photomultiplier tube used in this type of circuit.[7] The photomultiplier tube itself has been tested separately and found to operate satisfactorily.

The alpha-electron coincidence counter has been in operation for about eight months. Data obtained with this counter are difficult to interpret. The determination of soft electron energies by aluminum absorption is not too accurate, and, in most of the samples the large number of Auger electrons present, relative to the conversion electrons, make it almost impossible to draw a straight line absorption curve with any degree of accuracy. Therefore, in resolving these absorption curves, the best data regarding the electron energies involved has been drawn upon. For some samples, accurate data concerning the electron energies is available from the beta-ray spectrometer, while for others, the energy of the gamma ray, coupled

with the binding energy of the converted electron, may be used to determine the electron energy.

A. Americium^{241}

This nuclide, available in milligram quantities, has been studied by a number of observers. Seaborg and co-workers[8] found, by abosrption, a gamma ray of about 62 kev. The intensity of this gamma was about 0.4 per alpha particle. Martin,[9] using a gamma ray pulse analyzer, observes two gamma rays, one at 59 kev, intensity about 0.4 per alpha particle, and another at 100 kev, intensity very low (about 10^{-4} per alpha particle). Asaro and Perlman,[10] using an alpha-ray spectrometer, find three alpha groups. The ground state transition occurs in only about 0.4 percent abundance. Approximately 86 percent of the alpha particles go to an excited state of neptunium 59 kev above the ground state, and 14 percent to an excited state of neptunium 100 kev above the ground state. O'Kelley,[11] using a beta-ray spectrometer, observes electrons corresponding to conversion of a 59 kev gamma ray in the L and M shells. The ratio of L conversion electrons to total alpha particles is 0.28. Melander and Slätis,[12] studying the beta-decay of U^{237}, have observed two excited states of Np^{237}; one state 57 kev above ground, and another 204 kev above ground.

In the present investigation, alpha-electron and alpha-gamma coincidences are both observed in large abundance. Lead and copper absorption curves were taken on a sample of Am^{241} having an alpha disintegration rate of 1.2×10^5 per minute. Both absorption curves give a gamma energy of

58 kev, and an abundance of 0.32 coincidence per alpha particle.

The alpha-electron coincidence measurements were made on a sample with a disintegration rate of 9.9×10^4 per minute. The (aluminum) absorption curve may be resolved into two components of 37 kev and 53 kev. These energies correspond to L and M conversion electrons respectively of a 59 kev gamma. The ratio of coincidences involving 37 kev electrons to coincidences involving 53 kev electrons is about 3:1. The abundance of the alpha-electron coincidences (sum of coincidences between alpha particles and L and M conversion electrons) is about 0.49 coincidence per alpha particle.

The alpha-electron and alpha-gamma coincidence data, when taken together, give an abundance for the 59 kev transition of 0.81 per alpha particle, with the gamma ray about 60 percent converted. A decay scheme for Am^{241} consistent with these data alone might be as follows:

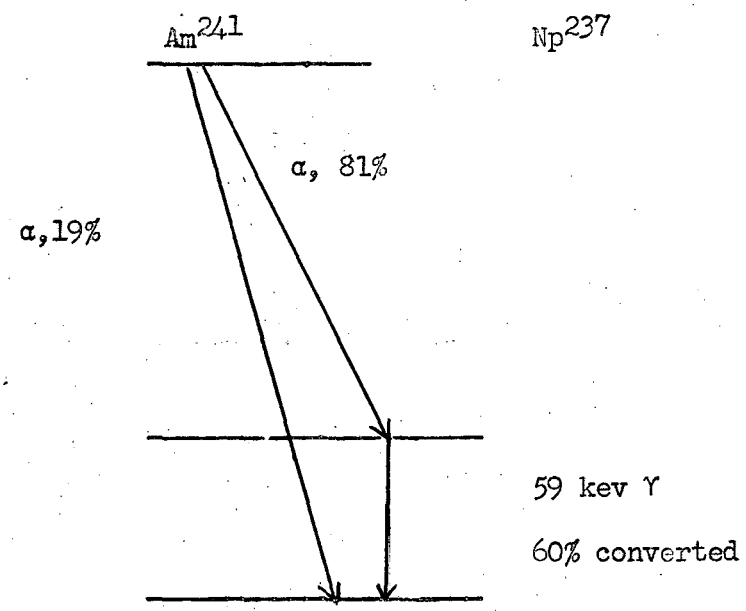

The data of Asaro[10] and Martin[9] taken together indicate the presence of a highly converted 41 kev gamma ray. M conversion electrons from this gamma ray would have an energy of about 35 kev, and would not be resolvable from the 37 kev electrons from L conversion of the 59 kev gamma. L conversion electrons from the 41 kev gamma would have an energy of about 20 kev, and would be indistinguishable from Auger electrons. Hence no conclusions regarding this transition may be drawn from these coincidence data.

Another uncertainty in the data is whether or not the soft electrons are being detected quantitatively. If some are missed, then these data would be reconciled with Asaro's measurements. The coincidence measurements do show definitely that a large fraction, if not all, of the alpha-particles are followed by a gamma-ray transition. The decay scheme which is in least serious conflict with all known data is the following:

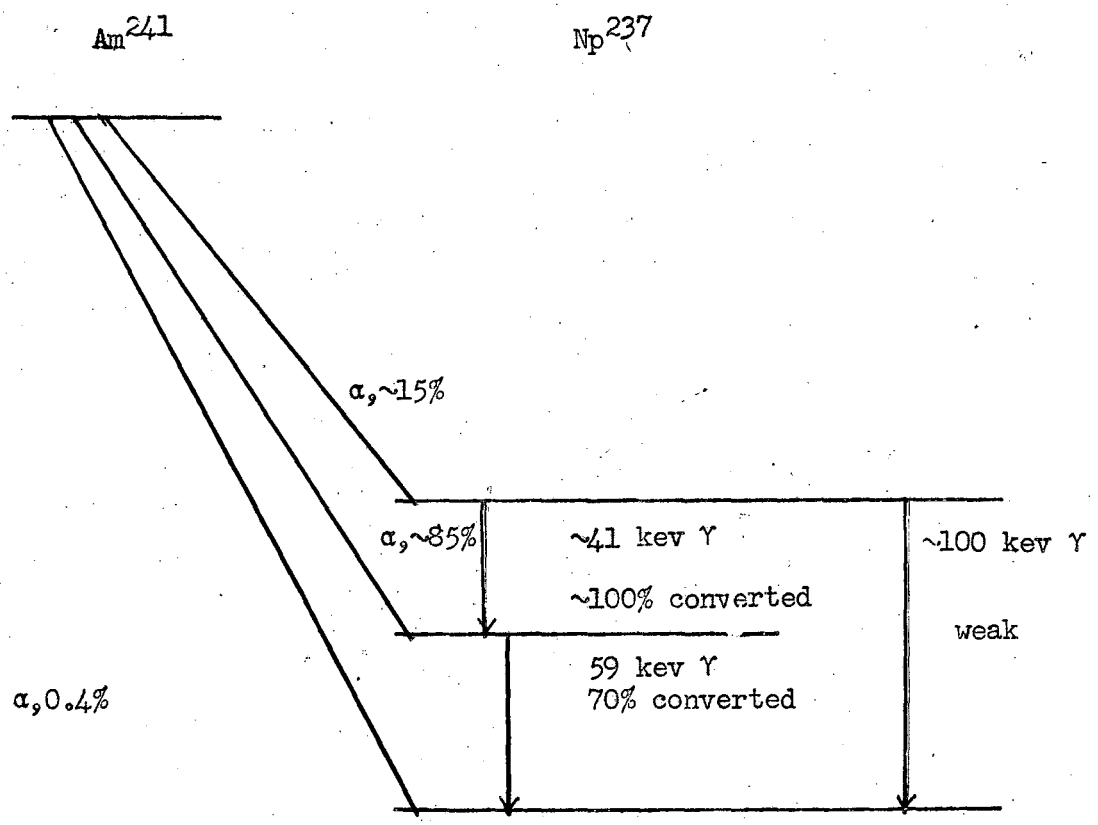

B. Curium^{242}

Cm^{242} is prepared by irradiating Am^{241} with neutrons and has been studied extensively. The alpha ray spectrometer[10] shows the presence of two alpha groups, separated by about 43 kev. The gamma ray pulse analyzer[9] shows the presence of a 43 kev gamma ray in low abundance (about 10^{-4} per alpha particle). O'Kelley,[11] using the beta-ray spectrometer, has shown the presence of both L and M conversion electrons of a 43 kev gamma ray.

The present investigation shows no evidence of any coincidences between alpha particles and a 43 kev gamma which is consistent with the low abundance found for the unconverted gamma ray. Such coincidences, if they occur at all, must be in very low abundance.

Alpha-electron coincidences are observed, and the energies of the electrons are 37.5 kev and 25 kev. These energies correspond to L and M conversion electrons of the 43 kev gamma ray. The ratio of alpha-L conversion electrons coincidences to alpha-M conversion electron coincidences is 2.9. The total abundance, considering coincidences between both L and M conversion electrons, is 0.37 coincidence per alpha particle. The data correspond to a decay scheme as follows:

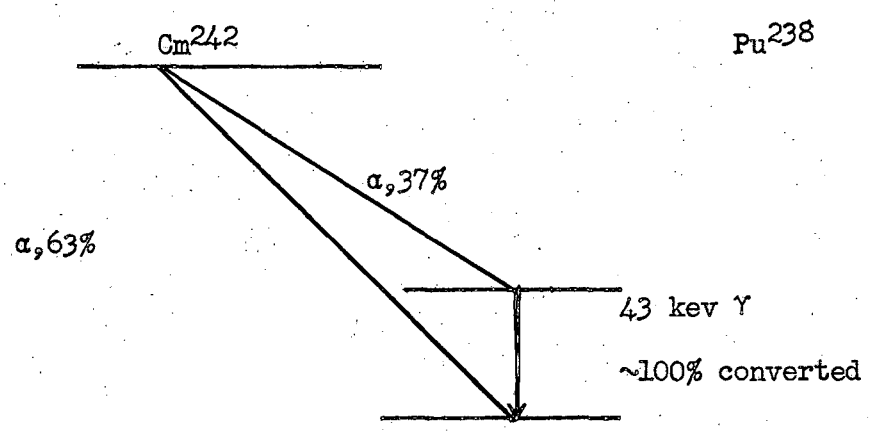

C. Thorium^{230}

This nuclide, known as ionium, has been studied extensively in France by a number of workers. Rosenblum, et.al.[13] using an alpha-ray spectrometer, have shown the presence of two alpha groups, in about equal abundance, separated by 69 kev. A third group exists at about 170 kev from the first group.

Absorption measurements[14,15,16] show the presence of gamma rays of 68 kev and 200 kev. Teillac and co-workers[17,18] studied the electron spectra using a Wilson camera, and found electrons corresponding to the L conversion of the 68 kev gamma ray. Rosenblum and Valadares,[19] using a beta-ray spectrometer, found electrons corresponding to the L, M, and N conversion of a 67.8 kev gamma ray.

A sample containing 11 percent Th^{230} and 89 percent Th^{232} was obtained from L. M. Slater. The Th^{230} has a half-life of 8×10^4 years, while the Th^{232} has a half-life of 1.4×10^{10} years.[20] Hence, although the sample is composed of 89 percent Th^{232}, essentially all of the activity is due to the decay of the Th^{230}.

Using this sample, two gamma rays are observed to be in coincidence with alpha particles, one of 67 kev and one of higher energy. The energy of the harder component could not be measured accurately, since sufficient absorber could not be inserted between the sample and the counter without disturbing the geometry. However, the energy of this harder component has been determined to be 200 kev by several workers.[14,15,16] This value was accepted as correct, and the absorption curve resolved assuming a gamma ray of this energy. The abundance of the coincidences between alpha

particles and the 200 kev gamma ray was 7×10^{-4} per alpha particle* while coincidences involving the 67 kev gamma had an abundance of 3.7×10^{-3} coincidence per alpha particle.

Alpha electron coincidences are also observed, only one group of electrons with an energy of 51 kev being involved. The abundance of these coincidences is 4.2×10^{-2} coincidence per alpha particle. As in other cases all of the electrons may not be counted. Conversion electrons from the 200 kev gamma ray, if present, must be in very low abundance.

Combining the results of the alpha-gamma and alpha-electron coincidence measurements, gives an abundance of 7×10^{-4} per alpha particle for the 200 kev transition, and 4.6×10^{-2} per alpha particle for the 67 kev transition, with the 67 kev gamma ray about 93 percent converted. No conversion electrons from the 200 kev gamma ray are detected. The decay scheme probably looks like this:

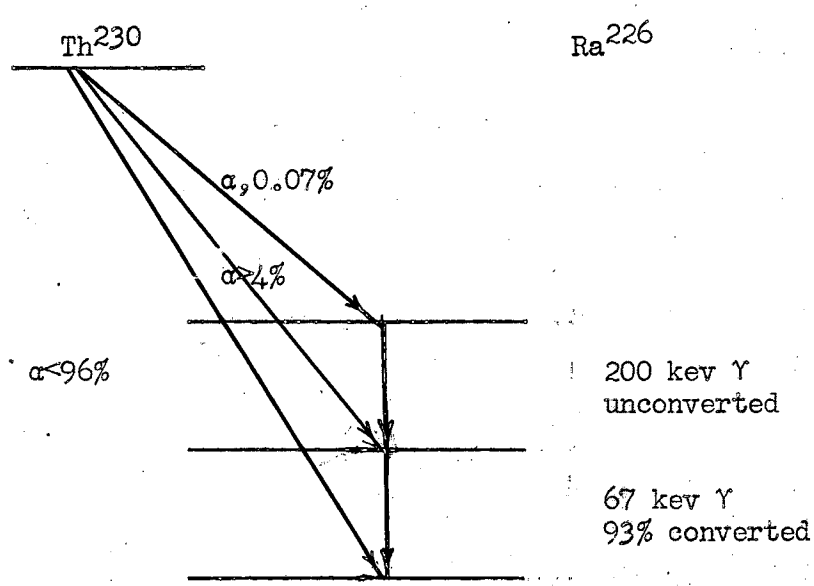

*By the method of Section D, below, it was calculated that 41 percent of the 200 kev gamma rays would be stopped by the crystal used in the scintillation counter. This figure was used in arriving at the abundance of 7×10^{-4} coincidences per alpha particle.

D. Protactinium^{231}

Previous work on this nuclide indicates the presence of two main alpha groups, with a difference in energy of about 300 kev.[21,22,23,24] The higher energy group is in the greater abundance, about 80-87 percent of the total.

A sample of almost pure Pa^{231} was obtained from L. M. Slater, about 83 percent of the total alpha activity attributable to the decay of this nuclide, while the remainder of the activity is due to decay products of Pa^{231}. The alpha-gamma coincidence counter indicates the presence of both 300 kev and 87 kev gamma rays in coincidence with alpha particles. The 87 kev component is probably due to K x-rays, rather than a nuclear transition. 200 kev electrons are also observed in coincidence with alpha particles. These would be K conversion electrons from the 300 kev gamma rays. Some evidence exists for the presence of 60 kev electrons in coincidence, arising from the conversion of the K x-rays in the L shell. The abundance of the coincidences is as follows:

Table I

Electron Energy (kev)	Gamma Energy (kev)	Abundance (Coincidence per alpha)
	300	0.23
	87	0.019
200		0.066
60		0.04

This gives a total abundance for the 300 kev transition of 0.30 per alpha, with the gamma ray 22 percent converted. The K x-rays, arising from the K conversion of the 300 kev gamma ray, are 60 percent converted in the L shell.

The abundance of the lower energy alpha group, calculated from these coincidence data, is somewhat higher than reported previously. However, 17 percent of the total alpha activity is due to the decay of nuclides other than Pa^{231}. Some of these may have alpha particles in coincidence with gamma rays or conversion electrons with the same energies as those from the decay of Pa^{231}. If this is the case, then the abundance of the lower energy alpha group from Pa^{231}, calculated from these data, would be too high. Also, in the 200 kev - 300 kev range, the absorption coefficient of sodium iodide is not known accurately. Mass absorption coefficients are listed for sodium and iodine for a number of x-ray energies up to 70 kev,[25] and values for the absorption coefficient of sodium iodide may be calculated. Theoretical values for the absorption coefficient of sodium iodide for energies between 1 mev and 10 mev have also been reported,[26] but there seems to be no data available in the range 0.1 mev - 1 mev. Values of the absorption coefficient of sodium iodide for gamma energies up to 70 kev, and above 1 mev, obtained from the above sources, were plotted, and a smooth curve drawn connecting all the points. Intermediate values of the absorption coefficient may then be obtained from this curve. Using values obtained in this manner, it was calculated that 23 percent of the 300 kev gamma rays and 95 percent of the 87 kev K x-rays would be stopped by the one-eighth inch thick sodium iodide crystal used

in the counter. It can be seen, however, from the method used to obtain these values, that they may be somewhat in error. Therefore, agreement with previous work is considered to be satisfactory. The decay scheme postulated from these data is given below:

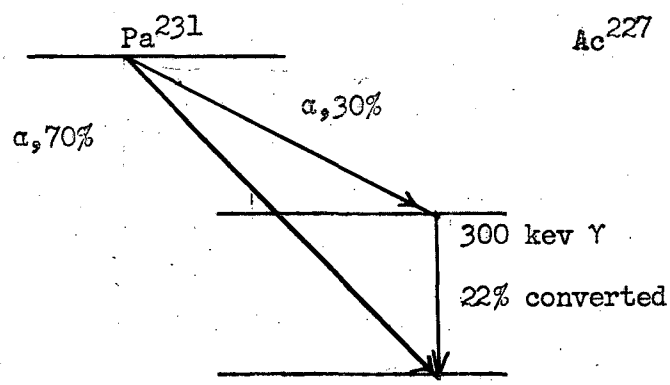

E. Plutonium^{239}

Pu^{239} has a complex decay scheme, and is being investigated by a number of workers. Preliminary results from the alpha-ray spectrometer[10,27] indicate two main alpha groups, separated by 48 - 50 kev, with several other possible groups in lower abundance. The gamma ray pulse analyzer[9] detects a gamma ray of about 60 kev.

The coincidence counter shows the presence of alpha-gamma coincidences, but copper and lead absorption curves give somewhat different values for the energy of the gamma (64 kev by lead absorption and 73 kev by copper absorption). The intensity of these alpha-gamma coincidences is 4×10^{-4} coincidence per alpha particle.

Alpha-electron coincidence also occur, but only very soft electrons are involved. Conversion electrons from a 65 kev gamma ray would have an

energy of at least 40 kev and there is no evidence of any coincidences between alpha particles and 40 kev electrons. It must be assumed, then, that the gamma ray has a very small conversion coefficient. There is insufficient data to postulate a decay scheme for this nuclide.

F. Uranium^{233}

The decay scheme of this nuclide is still somewhat uncertain. It is known to be complex, but a precise determination of the energies of the gamma rays associated with the decay of U^{233} has yet to be made.

The specific activity of U^{233} is too low to permit it to be analyzed with the beta-ray spectrometer.[28] By absorption methods, Studier[29] has observed gamma rays with energies of 310 kev, 80 kev, and 40 kev with the 80 kev and 40 kev gamma rays largely converted.

The coincidence counter shows alpha particles in coincidence with gamma rays and conversion electrons of several energies. A summary of the results is given in Table II. In calculating the abundance of

Table II

Electron Energy (kev)	Gamma Ray Energy (kev)	Abundance (Coincidence per alpha)
	360	1.9×10^{-3}
	88	1.5×10^{-3}
	39	2.0×10^{-3}
260		2.8×10^{-3}
68		6.9×10^{-3}
36		6.2×10^{-2}

coincidences between alpha particles and the higher energy gamma rays, 17 percent of the 360 kev gamma rays and 95 percent of the 88 kev gamma rays were considered to be absorbed in the sodium iodide crystal.* The abundance of the 360 kev transition is 4.7×10^{-3} coincidence per alpha, and the gamma ray is 60 percent converted in the K shell. This gives rise to K x-rays of thorium, which would be indistinguishable from the 88 kev gamma ray observed.

The abundance of the 88 kev transition is 8.4×10^{-3} coincidence per alpha, but of this figure, 2.8×10^{-3} coincidence per alpha must be due to K x-rays, hence the abundance of this transition is 5.6×10^{-3} coincidence per alpha, with the gamma ray about 82 percent converted.

The true abundance of the 39 kev transition is not known. The 36 kev electrons are probably M conversion electrons from this gamma ray. The L conversion electrons would have an energy of about 20 kev, and these are indistinguishable from Auger electrons. A reasonable figure for the ratio of L conversion to M conversion might be 4:1. Assuming this ratio, the abundance of the 39 kev transition may be calculated as 0.31 coincidence per alpha, with the gamma ray 99+ percent converted. The decay scheme, consistent with these data, is given below. For convenience, all the gamma rays are shown in cascade. However, there is no evidence that this is so.

---

*See section D above for the method of obtaining these figures.

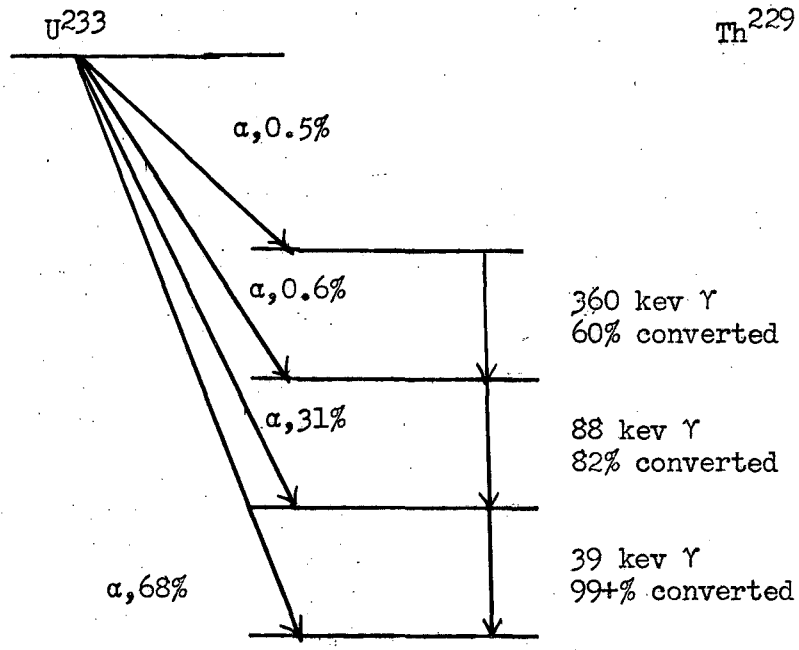

G. Uranium^{234}

There are few previous data available on this nuclide. Large numbers of L x-rays have been reported,[30] suggesting a highly converted gamma ray, with an abundance of about 0.25 per alpha. Preliminary work on the gamma ray pulse analyzer shows the presence of two gamma rays, with energies of about 50 kev and 100 kev.[9]

The coincidence counter shows alpha-electron coincidences in much greater abundance than alpha-gamma coincidences. A 65 kev gamma ray is in coincidence with alpha particles, the abundance being 1×10^{-3} per alpha particle. A gamma with an energy of about 115 kev may be present in low abundance, since it would have the same half thickness in lead. It was not possible to carry the copper absorption curve far enough to distinguish a 115 kev gamma ray, if it were present.

Alpha-electron coincidences are reasonably abundant, but it is difficult to establish the energy of the electrons. The best value, from the aluminum absorption data, is about 40 kev. This energy is somewhat low, if the electrons are L conversion electrons of a 65 kev gamma ray. The abundance of these electrons is 0.17 per alpha particle.

More data are necessary on this nuclide before a decay scheme can be postulated.

H. Polonium^{208,209,210}

A sample of Po^{210}, and a sample containing a mixture of $Po^{208,209,210}$ were obtained from W. Heimann. The coincidence counter shows no evidence of alpha-gamma or alpha-electron coincidences in either sample. This is to be expected from what is known of Po^{208} and Po^{210}, while Po^{209} was present in very low abundance.

I. Summary of Internal Conversion Coefficients

It might be of interest to collect the values of the internal conversion coefficients calculated from these coincidence data, and compare them with the theoretical values. An extensive table has been prepared by Rose and his co-workers[31,32] containing K shell internal conversion coefficients for electric and magnetic multipole radiation up to poles of order 2^5. More recently, values for internal conversion in the L_1 shell for electric dipole, electric quadrupole, and magnetic dipole have been published.[33]

In Table III are listed the internal conversion coefficients observed in the present work, as well as those calculated from theoretical considerations. The units of these internal conversion coefficients are electrons per gamma ray, rather than electrons per transition.

It might be noted that in the case of Pa^{231} and U^{233} there is a discrepancy between the number of K conversion electrons seen and the number of K x-rays seen. The number of K x-rays should be only slightly less than the number of K conversion electrons, since the Auger coefficient is about 10 percent for x-rays of this energy. This discrepancy can be explained if the number of K conversion electrons seen is too high, and the number of K x-rays seen is too low. The probable error in both these abundances is large.

			Electric					Magnetic					Shell
	Order		2^1	2^2	2^3	2^4	2^5	2^1	2^2	2^3	2^4	2^5	
Nuclide	Energy (kev)	Observed value	Theoretical Values										
Am^{241}	59	1.5	0.17	4.2				25					L
Cm^{242}	43	4000 (est)	0.27	12				54					L
Th^{230}	67	11	0.12	1.5				11					L
Pa^{231}	300	0.35	0.031	0.078	0.20	0.51	1.2	1.3	2.8	6.2	13	29	K
Pu^{239}	65	very small	0.14	2.8				18					L
U^{233}	360	1.5	0.022	0.058	0.15	0.37	0.86	0.87	1.8	3.7	7.8	16	K
	88	large	0.066	0.61				6.3					L
	39	120 (est)	0.32	11				48					L
U^{234}	60	200 (est)	0.17	2.9				19					L

Internal Conversion Coefficients

Table III

IV. ACKNOWLEDGMENT

The advice and encouragement of Professor I. Perlman, under whom this work was performed, are gratefully acknowledged.

I am especially indebted to H. P. Robinson for his advice and assistance in solving many of the electronic problems.

I also wish to thank L. M. Slater, C. I. Browne, Jr., W. Heiman, E. K. Hulet, and W. W. T. Crane for providing some of the samples used.

This work was performed under the auspices of the U. S. Atomic Energy Commission.

V. REFERENCES

1. J. V. Dunworth, Rev. Sci. Inst. 11, 167 (1940).
2. C. E. Manderville and M. V. Scherb, Nucleonics 3, No. 4, 2 (October, 1948).
3. B. F. J. Schonland, Proc. Roy. Soc. A, 104, 235 (1923).
4. B. F. J. Schonland, Proc. Roy. Soc. A, 108, 187 (1925).
5. W. E. Glenn, Jr., Nucleonics 4, No. 6, 50 (1949).
6. T. P. Kohman, National Nuclear Energy Series, Plutonium Project Record, Vol. 14B, "The Transuranium Elements: Research Papers," Paper No. 22.50 (McGraw-Hill Book Co., Inc., New York, 1949).
7. A. E. Larsh, private communication.
8. G. T. Seaborg, R. James, and L. O. Morgan, National Nuclear Energy Series, Plutonium Project Record, Vol. 14B, "The Transuranium Elements: Research Papers," Paper No. 22.1 (McGraw-Hill Book Co., Inc., New York, 1949).
9. D. Martin, private communication (May, 1951).
10. F. Asaro and I. Perlman, private communication.
11. G. D. O'Kelley, University of California Radiation Laboratory Report UCRL-1243 (May, 1951).
12. L. Melander and H. Slätis, Phys. Rev. 74, 709 (1948).
13. S. Rosenblum, M. Valadares, and J. Vial, Compt. rend. 227, 1088 (1948).
14. I. Curie, Compt. rend. 227, 1225 (1948).
15. I. Curie, J. Phys. radium 10, 381 (1949).
16. M. Riou, Compt. rend. 228, 678 (1949).

17. J. Teillac, Compt. rend. 227, 1227 (1948).

18. G. Albouy, H. Faraggi, M. Riou, and J. Teillac, Compt. rend. 229, 435 (1949).

19. S. Rosenblum and M. Valadares, Compt. rend. 232, 501 (1951).

20. G. T. Seaborg and I. Perlman, Revs. Modern Phys. 20, 585 (1948).

21. L. Meitner, Z. Phys. 50, 17 (1928).

22. F. L. Clark, H. J. Spencer-Palmer, and R. N. Woodward, Imperial Chemical Industries Limited Report BR-522 (Northwich, October 10, 1944.)

23. S. T. Tsien, M. Bachelet, and G. Bouissieres, J. phys. radium 7, 167 (1946).

24. J. Teillac, Compt. rend. 229, 650 (1949).

25. S. J. M. Allen, Handbook of Chemistry and Physics, 30th Edition, p. 2005, Cleveland: Chemical Rubber Publishing Company (1947).

26. R. Hofstadter and J. A. McIntyre, Nucleonics 7, No. 3, 32 (September, 1950).

27. S. Rosenblum, M. Valadares, and B. Goldschmidt, Compt. rend. 230, 638 (1950).

28. D. G. O'Kelley, private communication (April, 1951).

29. M. H. Studier, National Nuclear Energy Series, Plutonium Project Record, Vol. 17B, Paper No. 1.3 (McGraw-Hill Book Co., Inc., New York, to be published); Metallurgical Laboratory Report CB-3793 (March, 1947).

30. G. Scharff-Goldhaber, E. der Mateosian, M. McKeown, and A. W. Sunyar, U. S. Atomic Energy Commission Unclassified Report AECU-767 (December 5, 1949).

31. G. Goertzel and M. E. Rose, U. S. Atomic Energy Commission Declassified Document MDDC-1514 (December 10, 1944).

32. M. E. Rose, G. H. Goertzel, B. I. Spinrad, J. Harr, and P. Strong, Phys. Rev. 76, 184 (1949). These authors have distributed privately an extensive table of their results.

33. H. Gallman, B. A. Griffith, and J. P. Stanley, Phys. Rev. 80, 866 (1950).

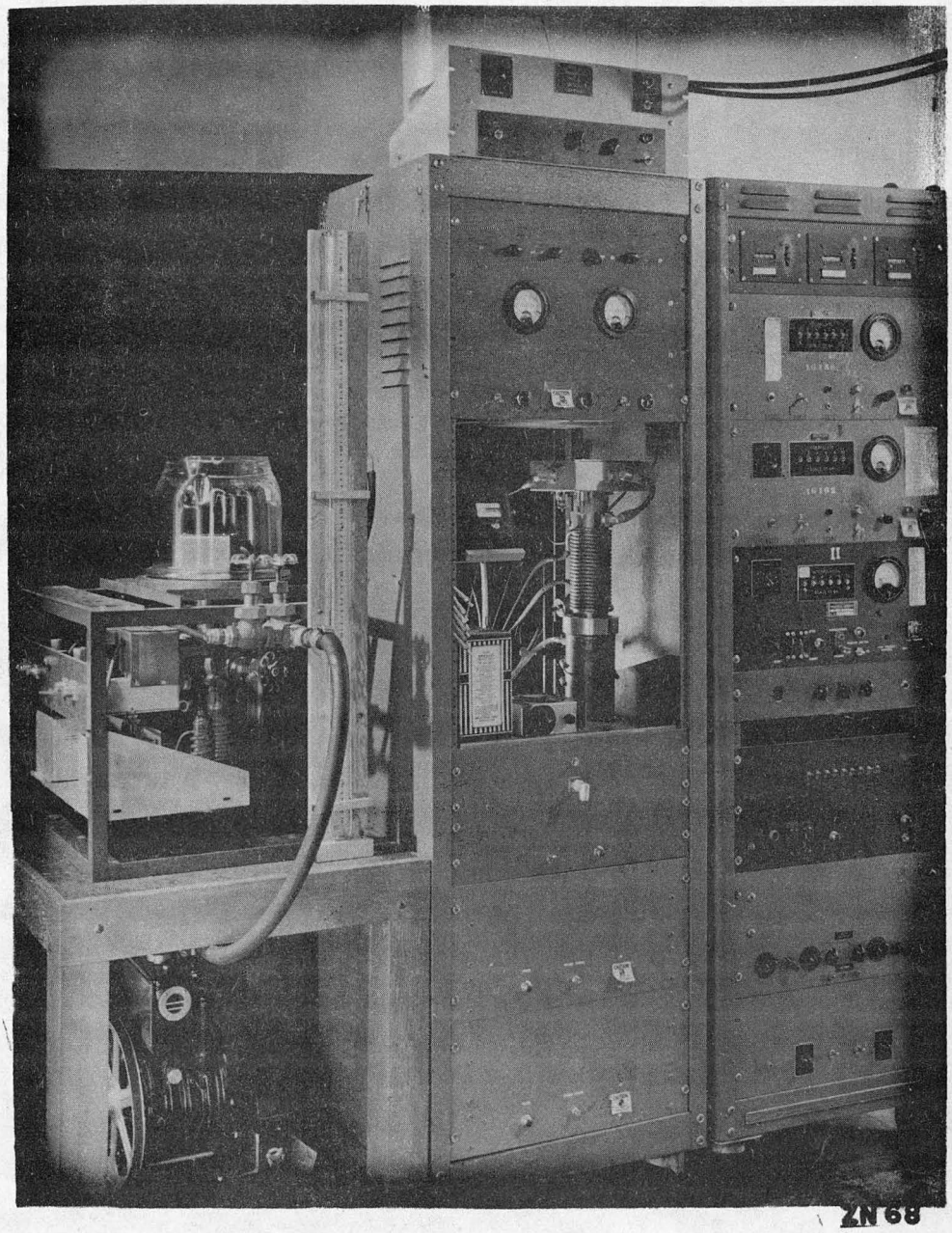

Fig. 1

Photograph of the Complete Apparatus

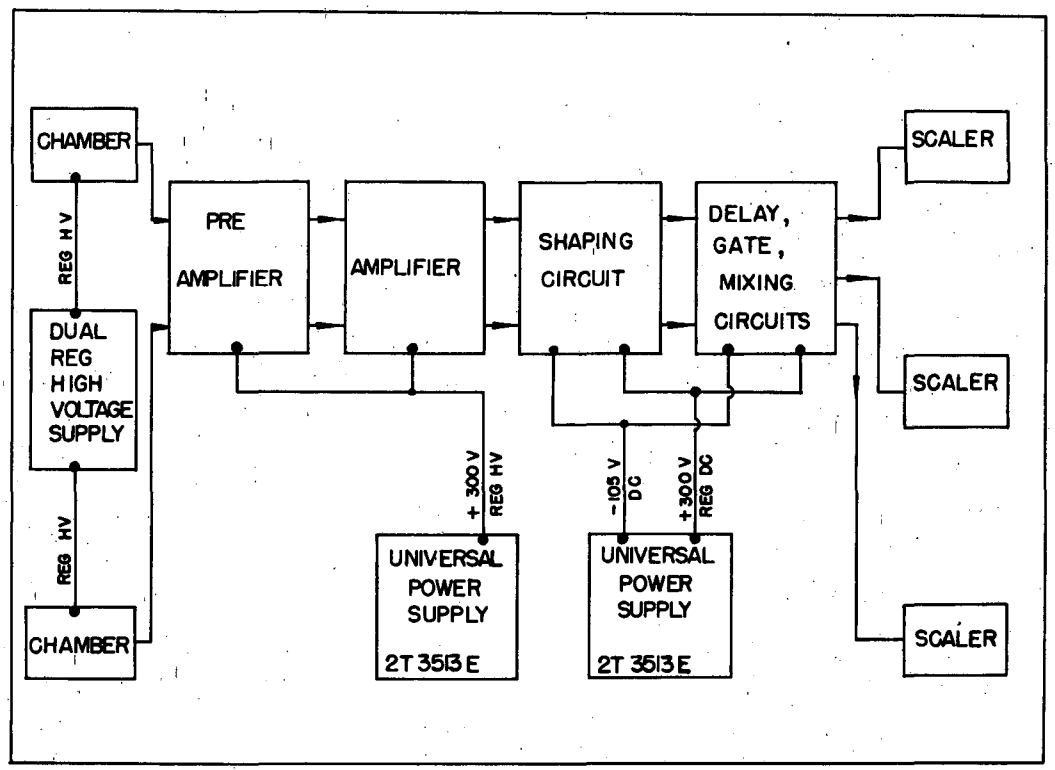

Fig. 2

Alpha-Electron Coincidence Counter - Block Schematic

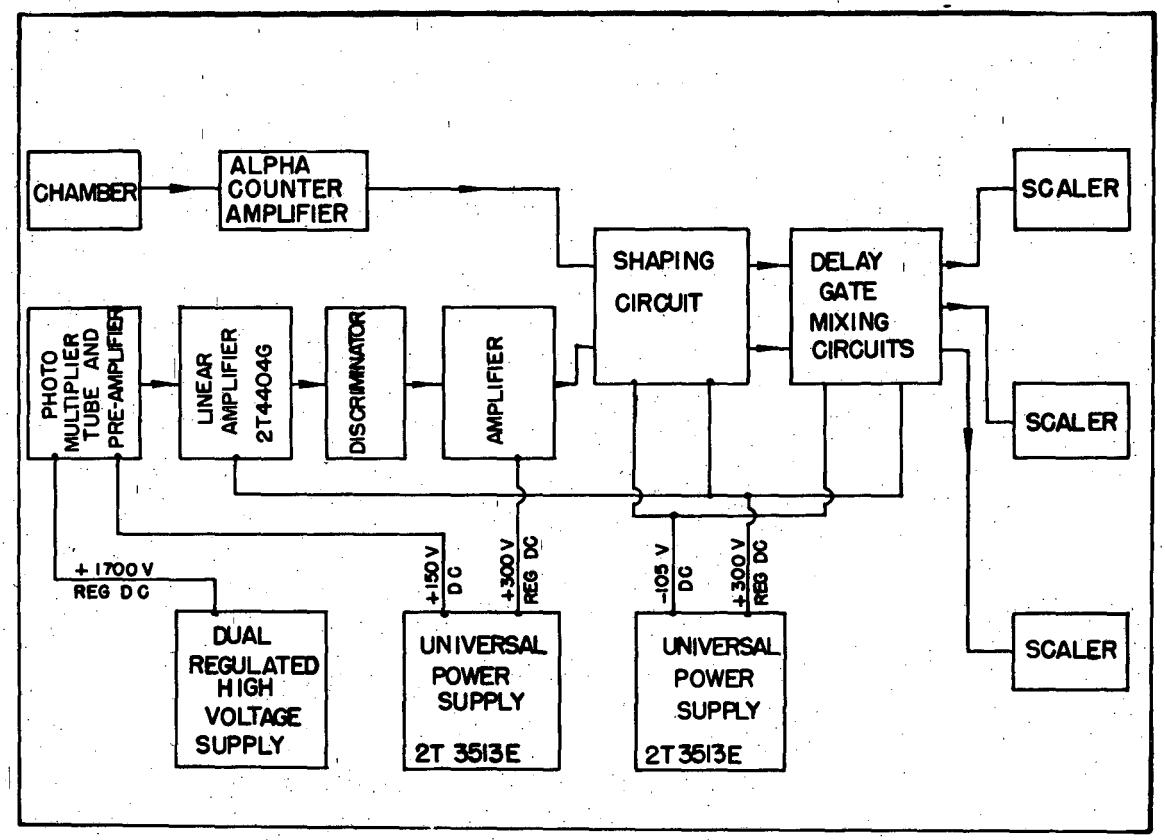

Fig. 3

Alpha-Gamma Coincidence Counter - Block Schematic

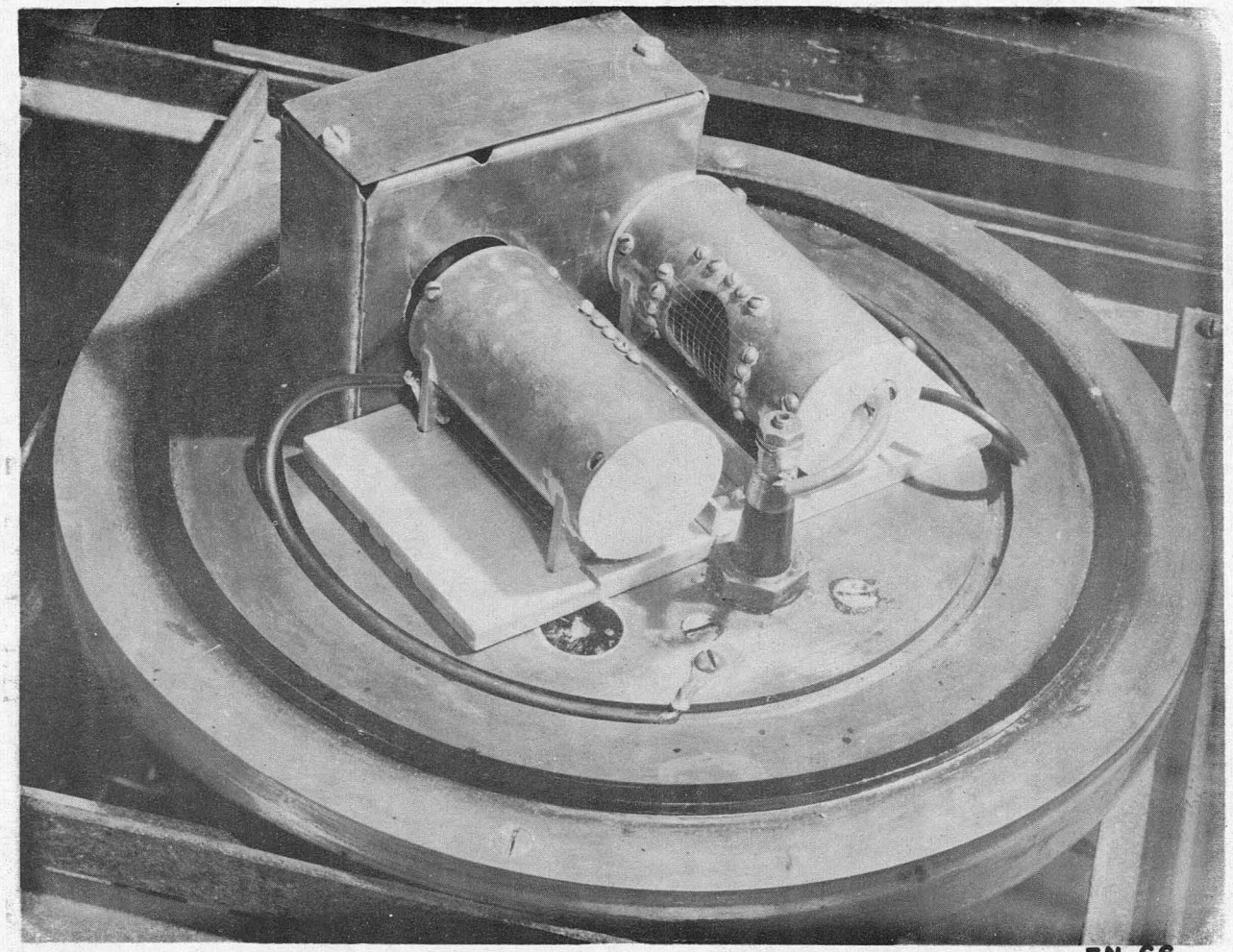

Fig. 4

Photograph of Proportional Counter Tubes with Shielding Removed from One Channel. Bell Jar Removed.

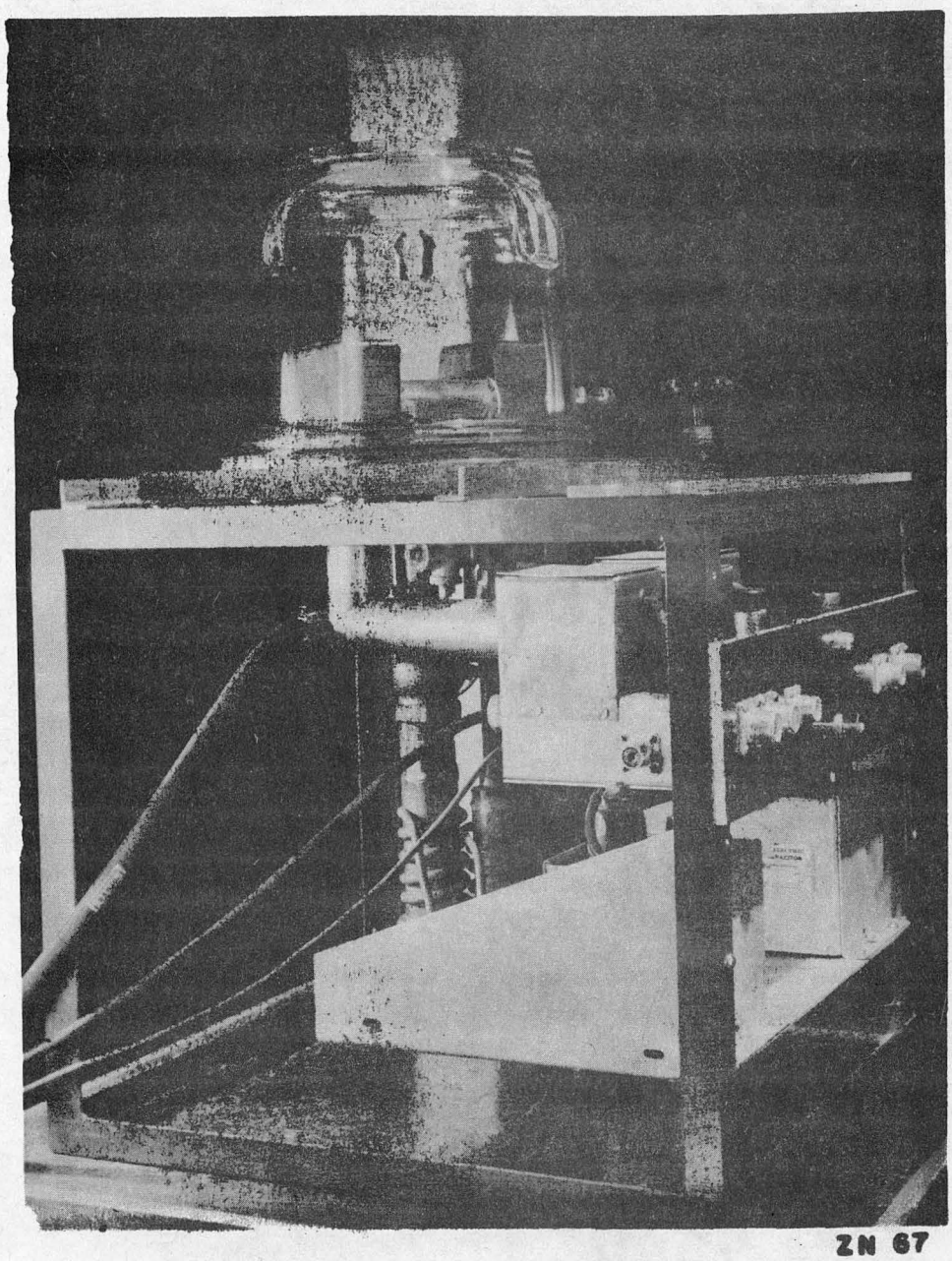

Fig. 5

Photograph of Proportional Counter Chamber Showing all Shielding in Place. Bell Jar in Place.

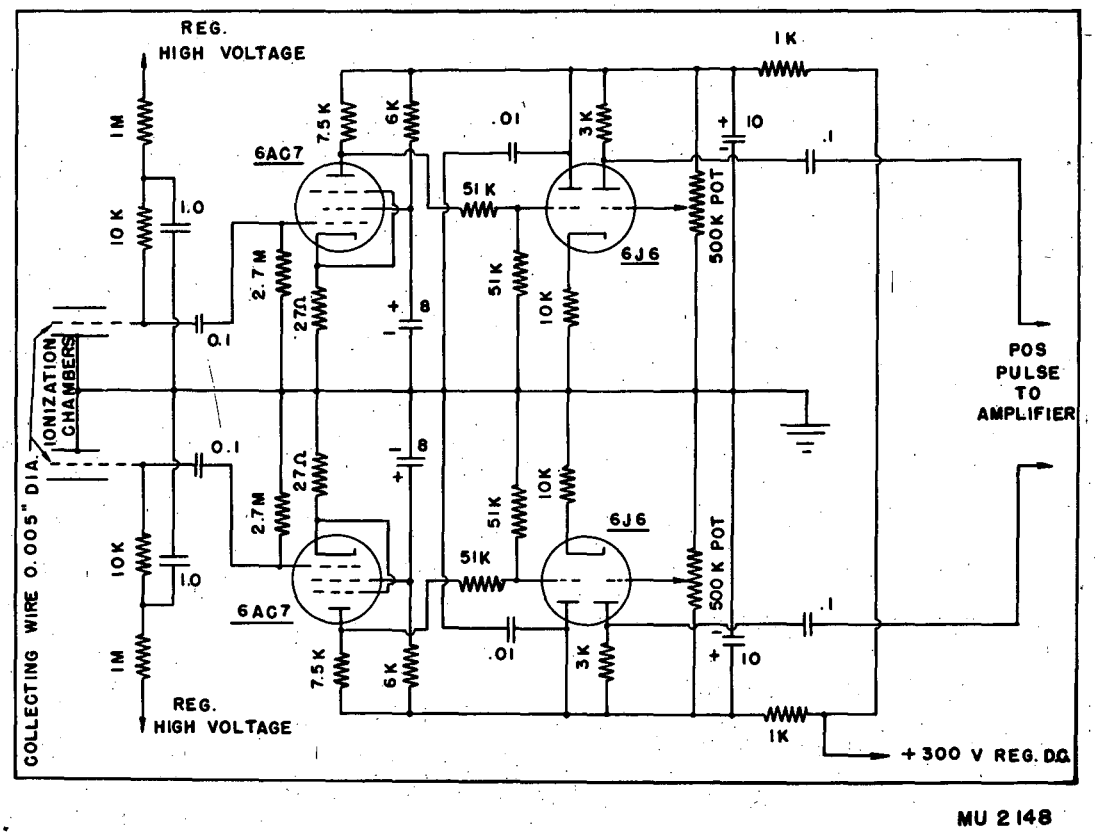

Fig. 6

Pre-Amplifier Circuit

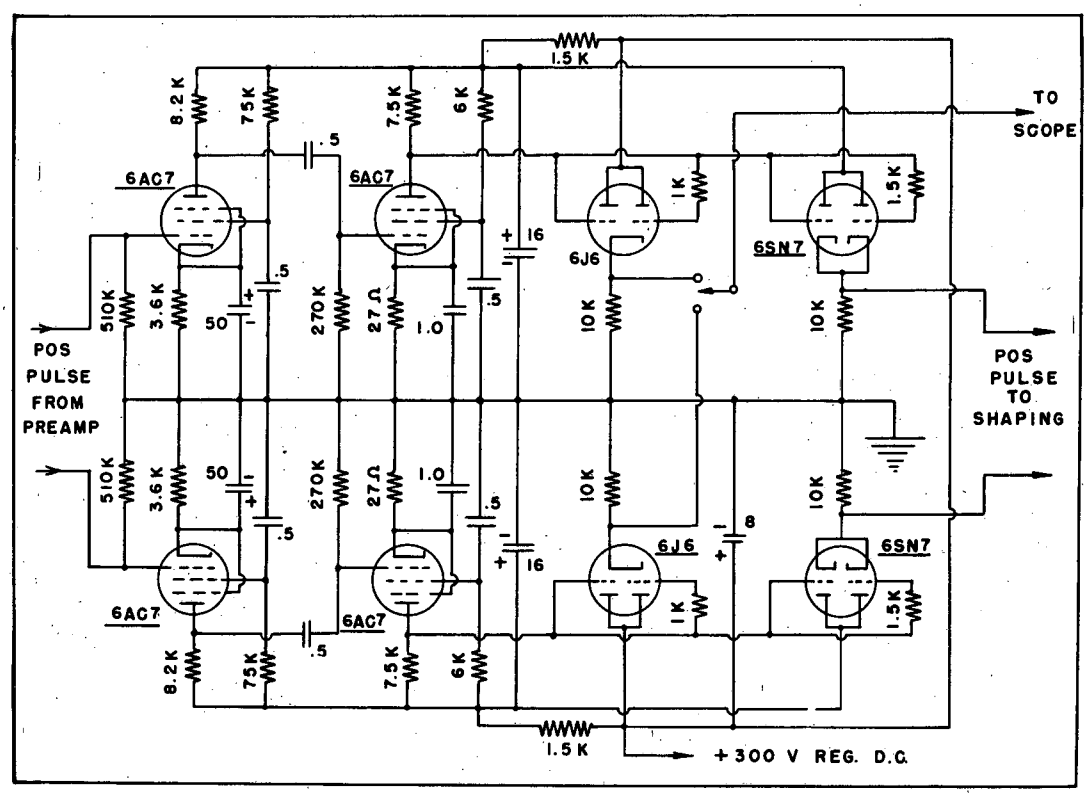

MU 2149

Fig. 7

Amplifier Circuit

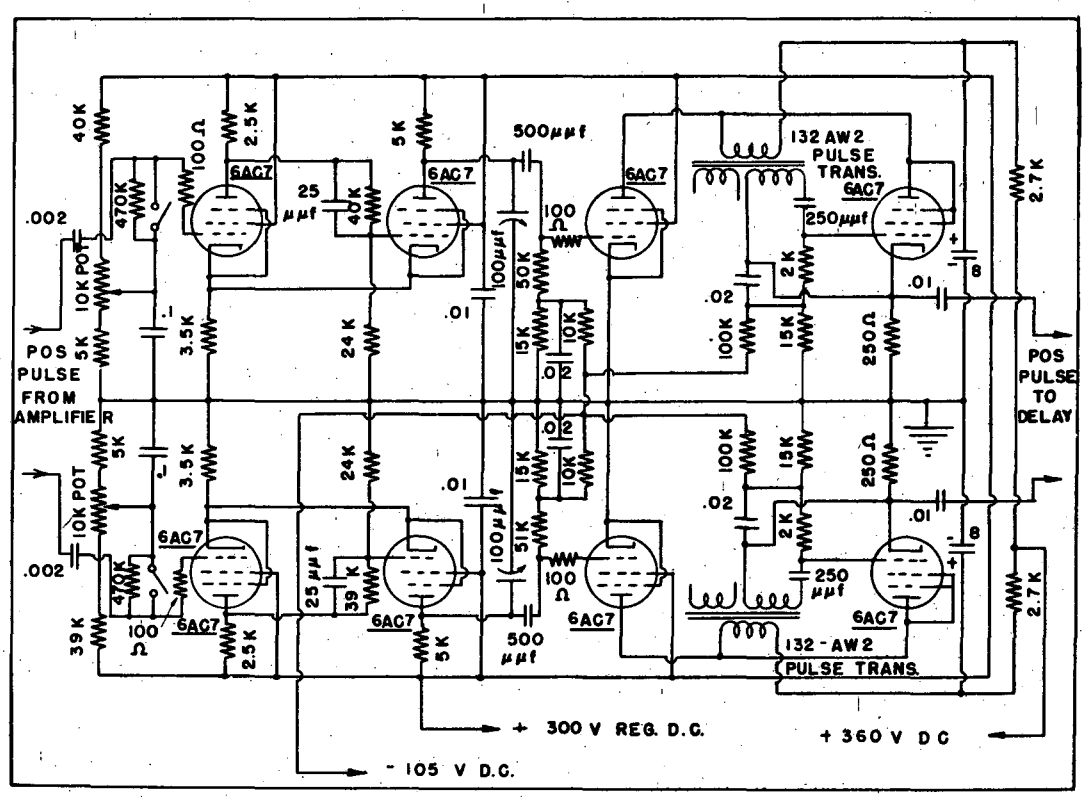

Fig. 8

Shaping Circuit

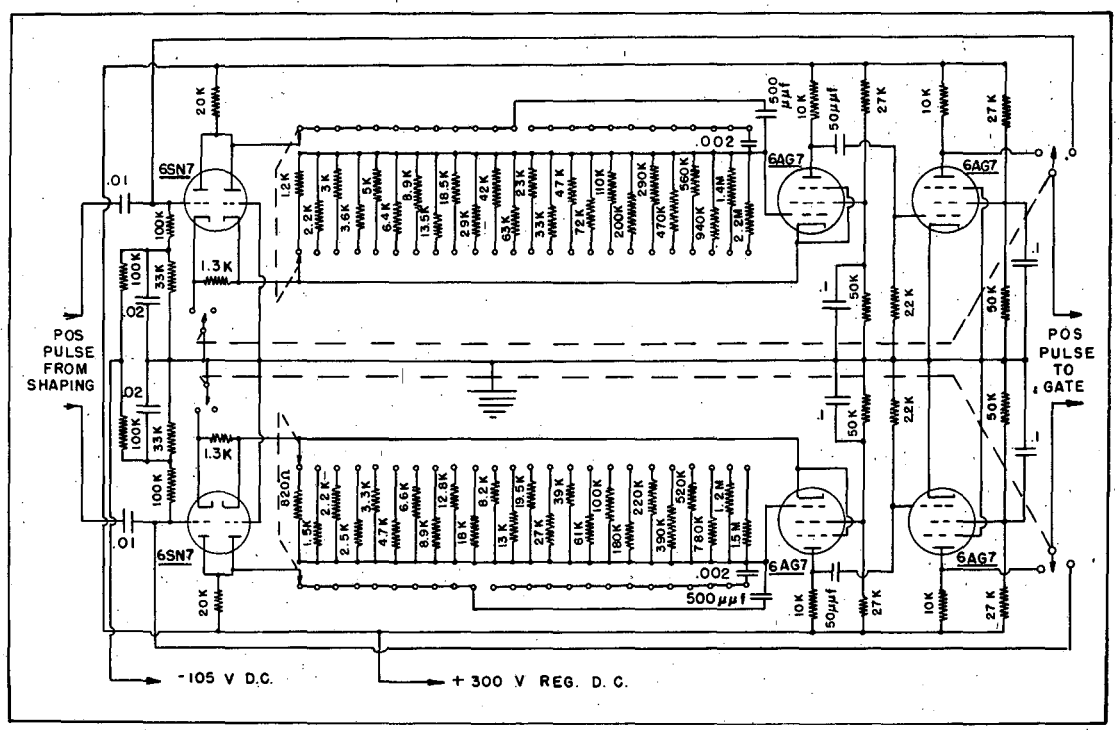

Fig. 9

Delay Circuit

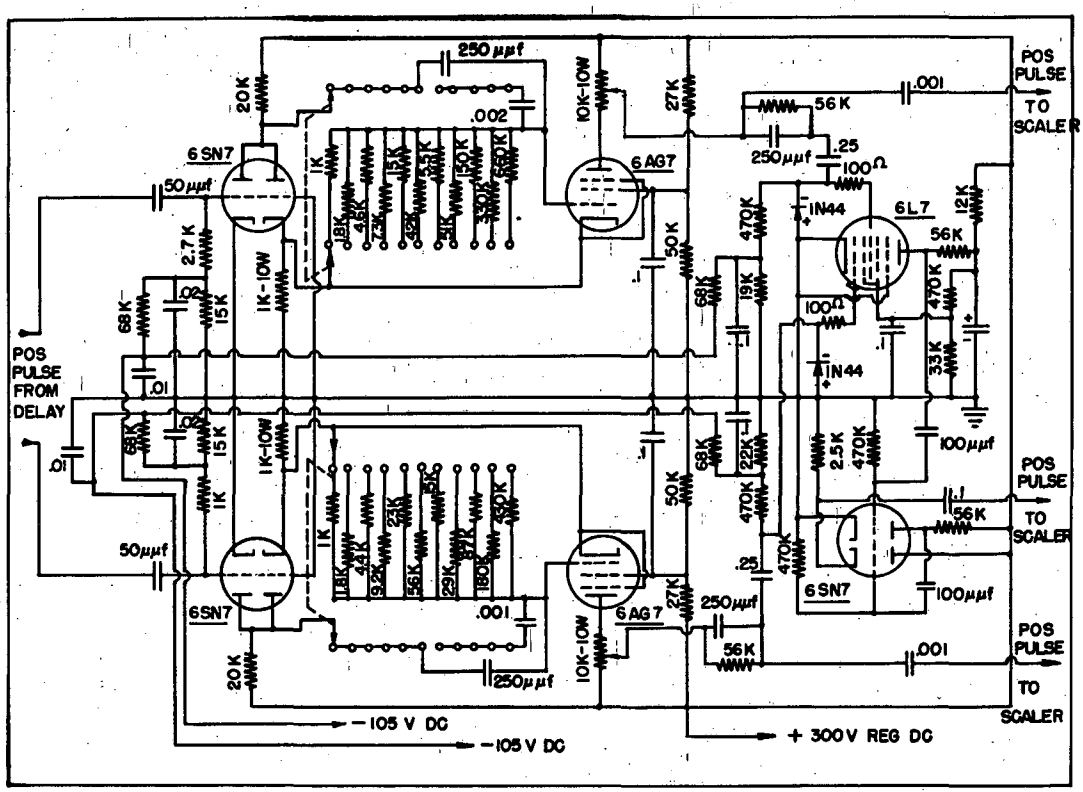

Fig. 10

Gate and Mixing Circuit

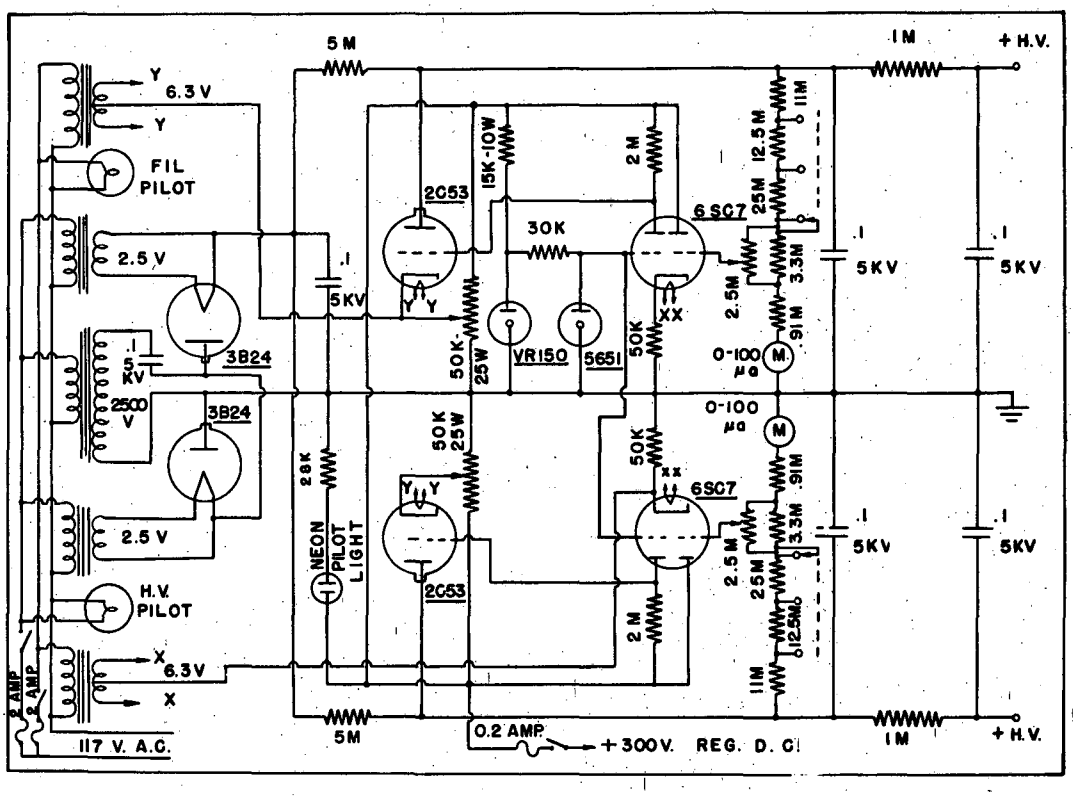

Fig. 11

Dual Regulated High Voltage Supply 750 - 5000 Volts

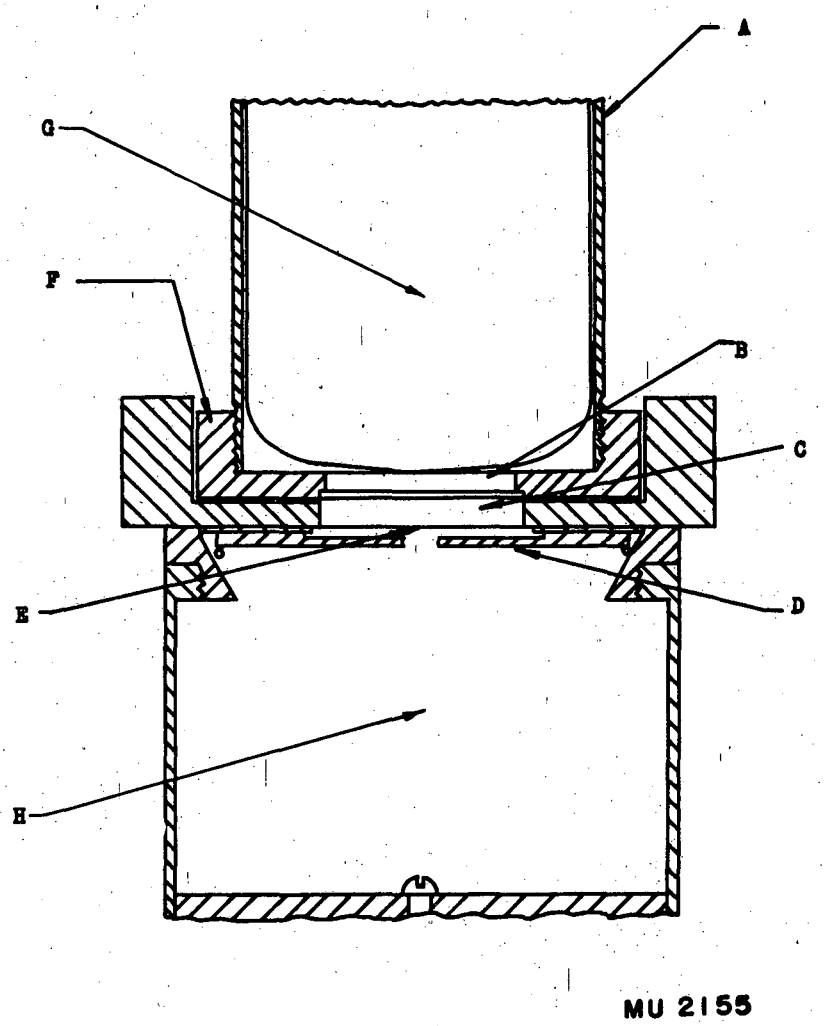

Fig. 12

Diagram showing arrangement of alpha - chamber, crystal, - photomultiplier tube

A. Brass Cylinder
B. Crystal
C. Space for Absorbers
D. Clamp to Hold Sample in Place
E. 0.001 inch Aluminum Window
F. Aluminum Cap
G. 5819 Photomultiplier Tube
H. Alpha Chamber

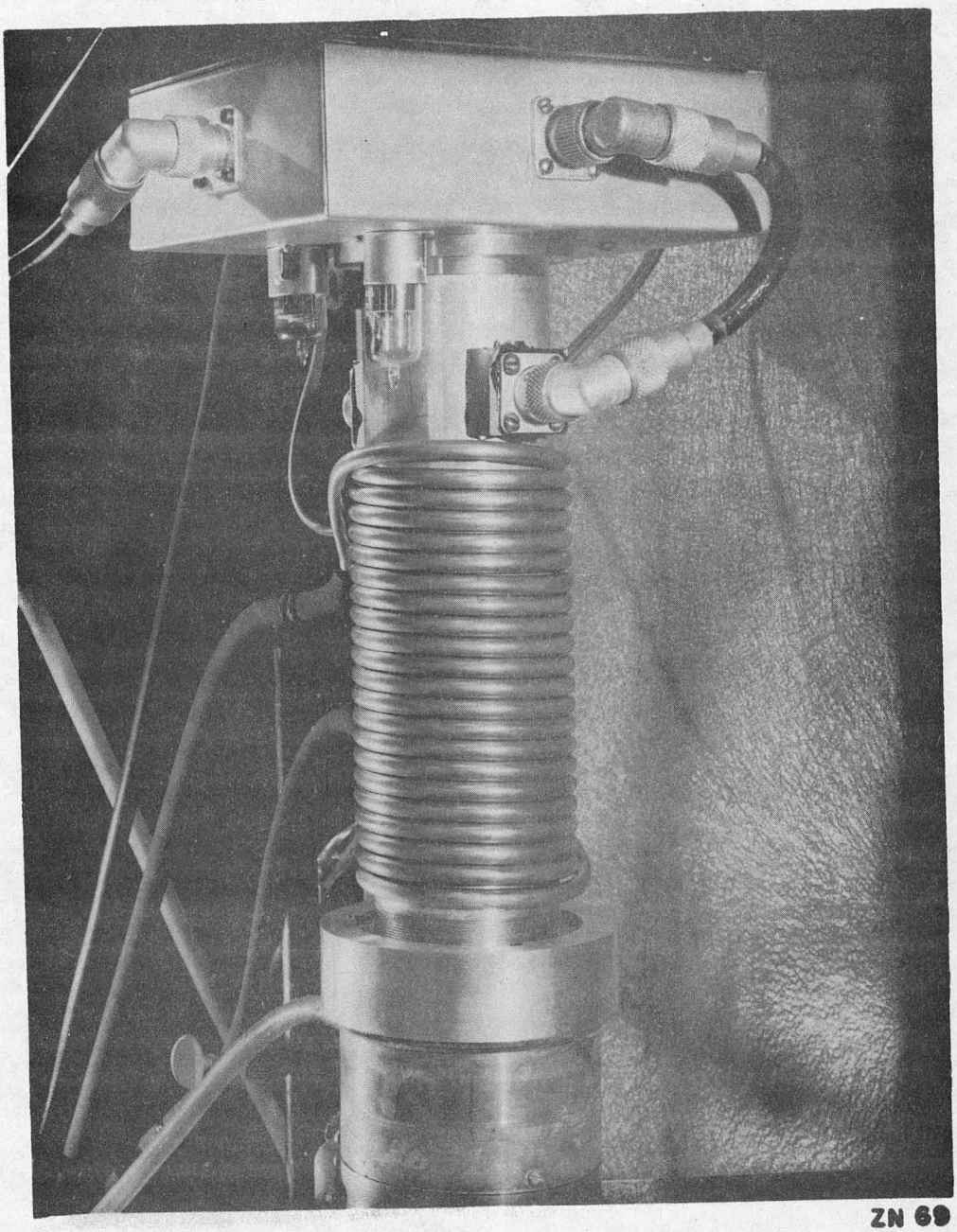

Fig. 13

Photograph of the Alpha-Gamma Coincidence Counter, showing the Alpha Chamber, and the Brass Cylinder Containing the Crystal and Photomultiplier Tube, and the Preamplifier.

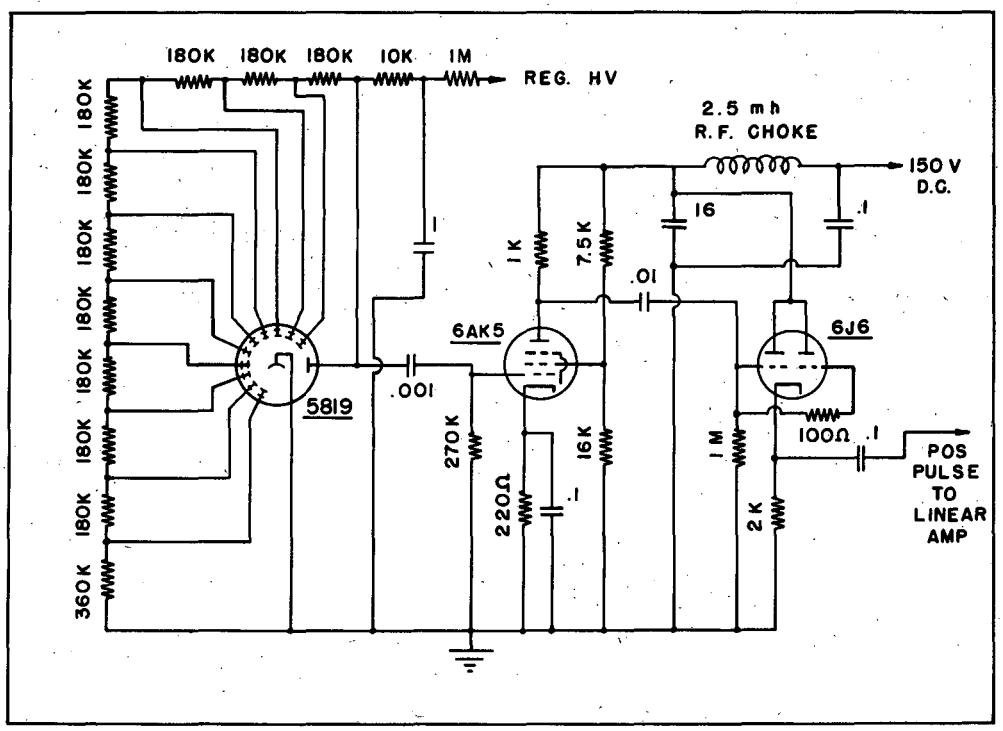

Fig. 14

Photomultiplier Tube and Preamplifier Circuit

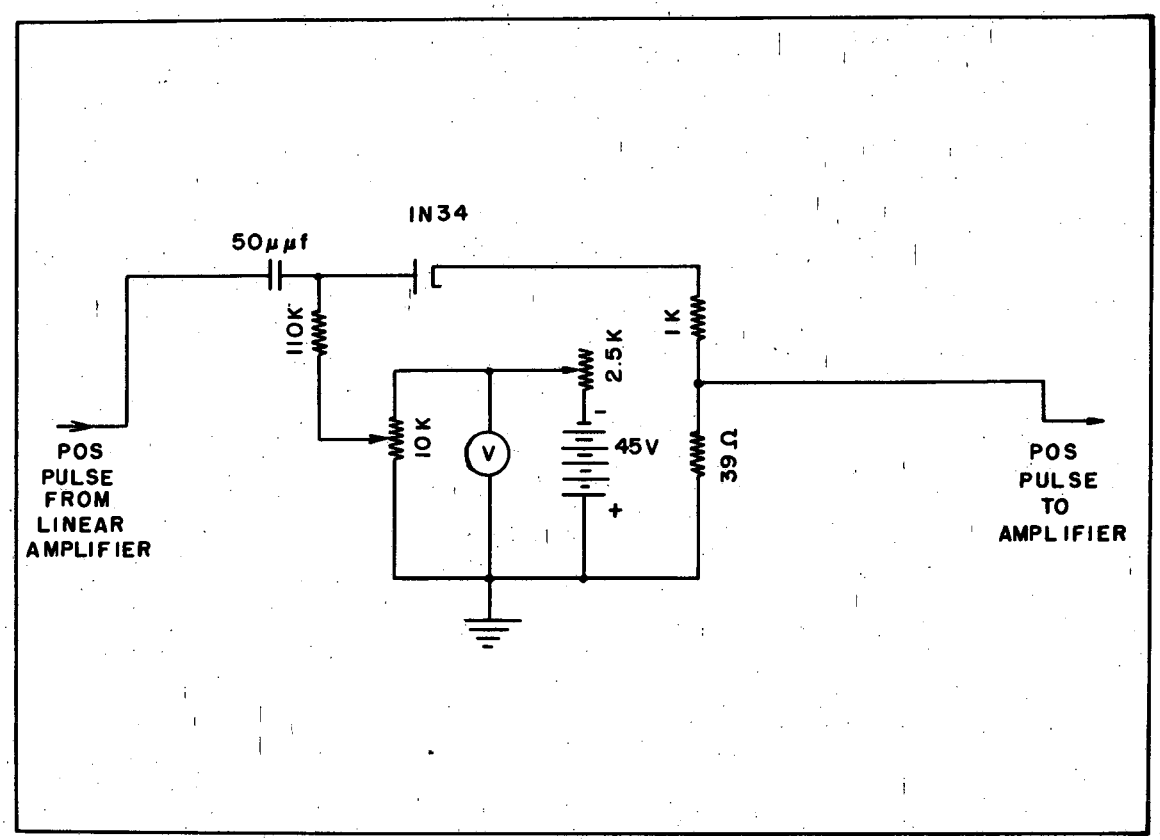

Fig. 15

Discriminator Circuit

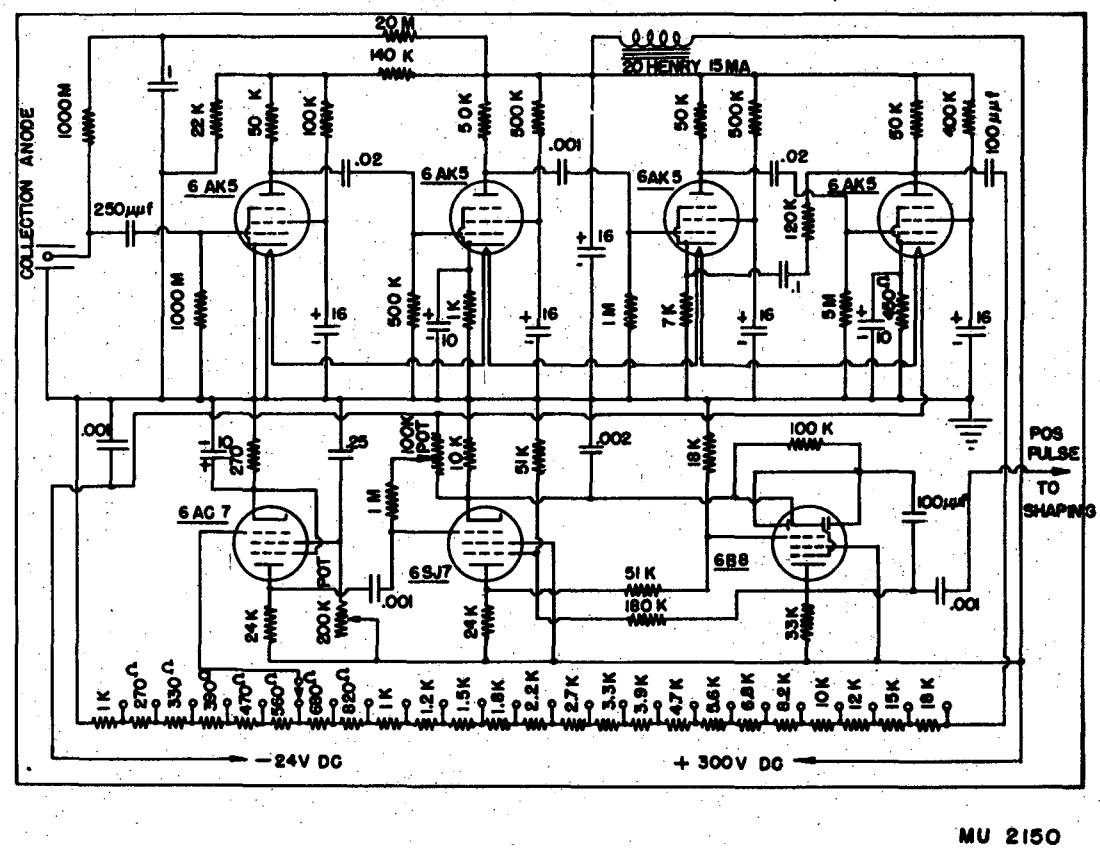

Fig. 16

Alpha Counter Amplifier Circuit

FIGURE CAPTIONS FOR GRAPHS

Figure 17 Am^{241} - Cu and Pb Absorption Curves.

Figure 18 Am^{241} - Al Absorption Curve.

Figure 19 Cm^{242} - Al Absorption Curve.

Figure 20 Th^{230} - Pb Absorption Curve.

Figure 21 Th^{230} - Cu Absorption Curve.

Figure 22 Th^{230} - Al Absorption Curve.

Figure 23 Pa^{231} - Cu and Pb Absorption Curves.

Figure 24 Pa^{231} - Cu Absorption Curve.

Figure 25 Pa^{231} - Al Absorption Curve.

Figure 26 Pu^{239} - Cu and Pb Absorption Curve.

Figure 27 Pu^{239} - Al Absorption Curve.

Figure 28 U^{233} - Pb Absorption Curve.

Figure 29 U^{233} - Cu Absorption Curve.

Figure 30 U^{233} - Al Absorption Curve.

Figure 31 U^{233} - Al Absorption Curve.

Figure 32 U^{234} - Pb and Cu Absorption Curves.

Figure 33 U^{234} - Al Absorption Curve.

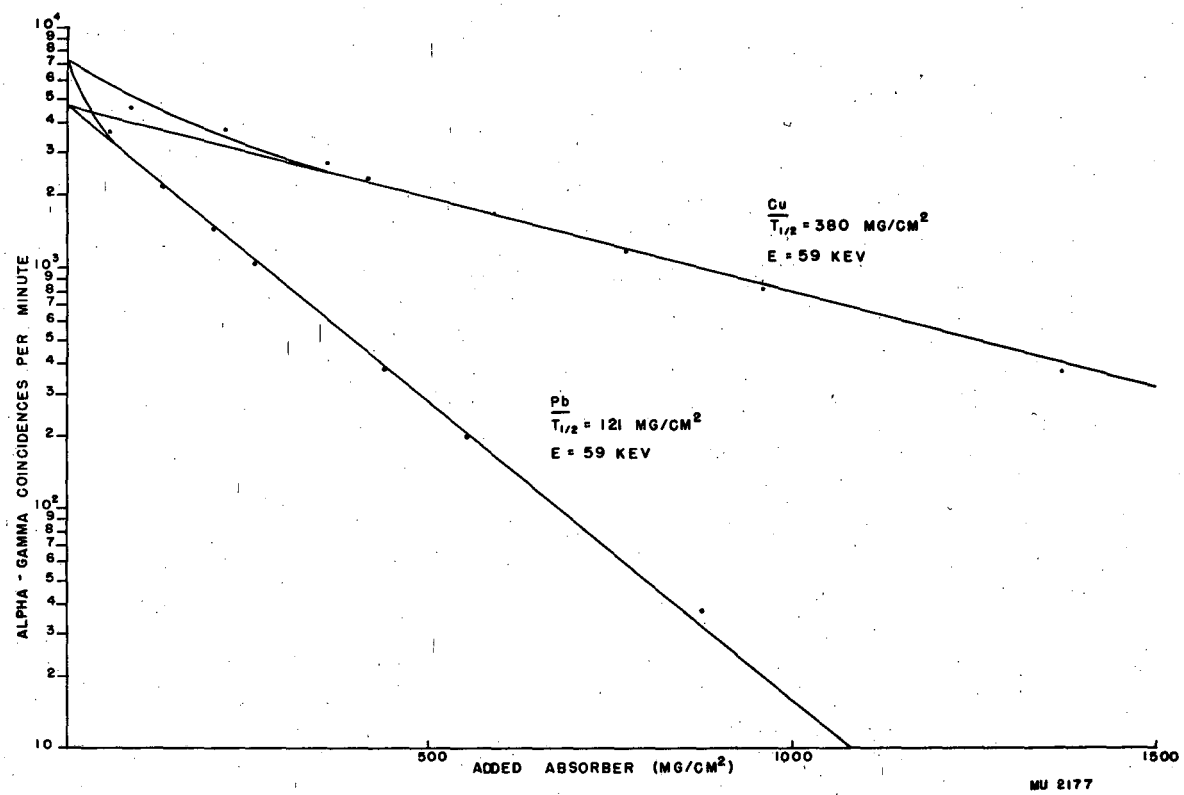
ALPHA - GAMMA COINCIDENCES PER MINUTE
ADDED ABSORBER (MG/CM²)
Cu
T1/2 = 380 MG/CM²
E = 59 KEV
Pb
T1/2 = 121 MG/CM²
E = 59 KEV
MU 2177

Fig. 17

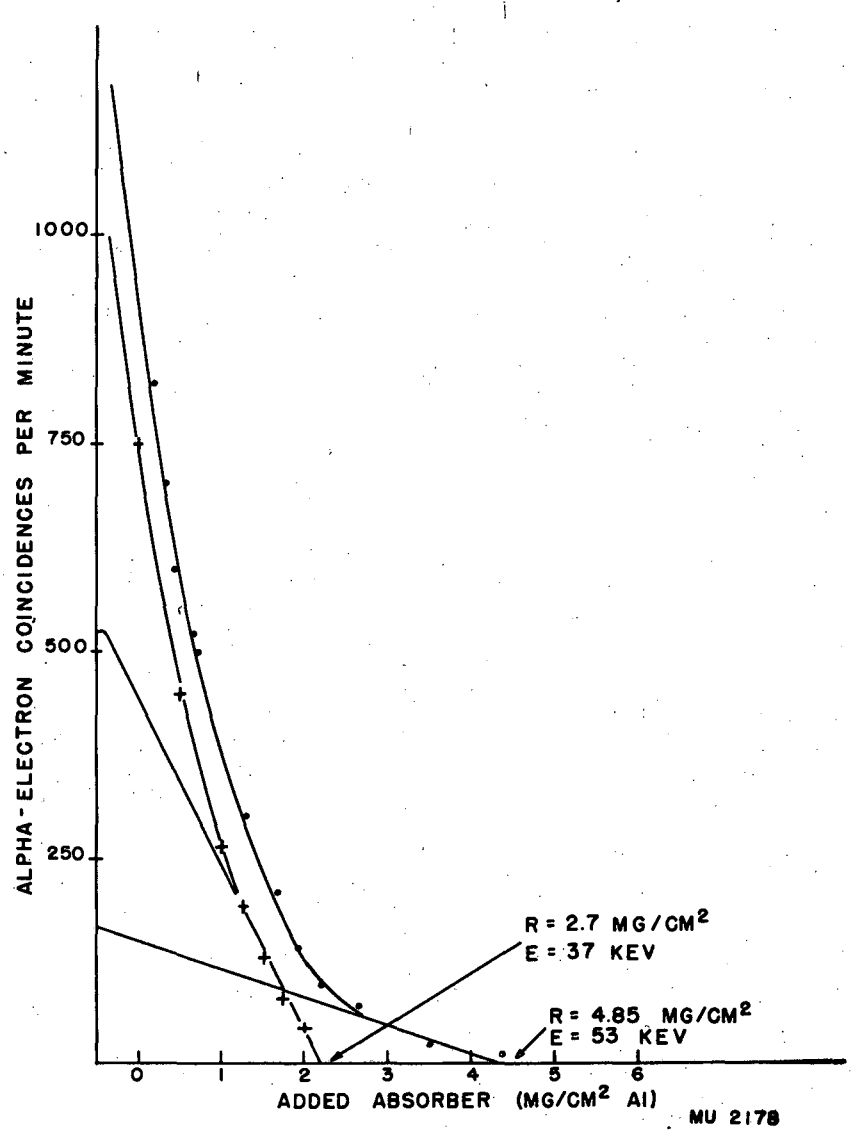
1000
750
500
250
ALPHA-ELECTRON COINCIDENCES PER MINUTE
R = 2.7 MG/CM2
E = 37 KEV
R = 4.85 MG/CM2
E = 53 KEV
0
1
2
3
4
5
6
ADDED ABSORBER (MG/CM2 Al)
MU 2178

Fig. 18

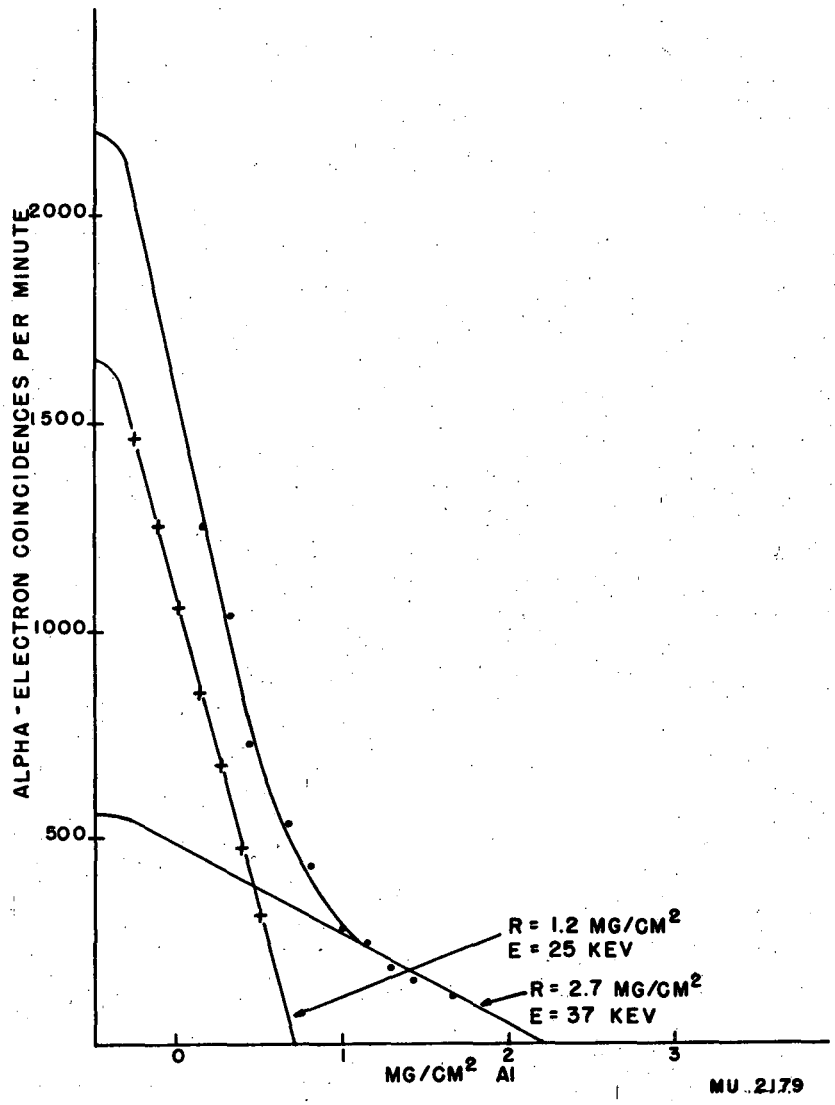
ALPHA - ELECTRON COINCIDENCES PER MINUTE
2000
1500
1000
500
0
1
2
3
MG/CM² Al
R = 1.2 MG/CM²
E = 25 KEV
R = 2.7 MG/CM²
E = 37 KEV
MU 2179

Fig. 19

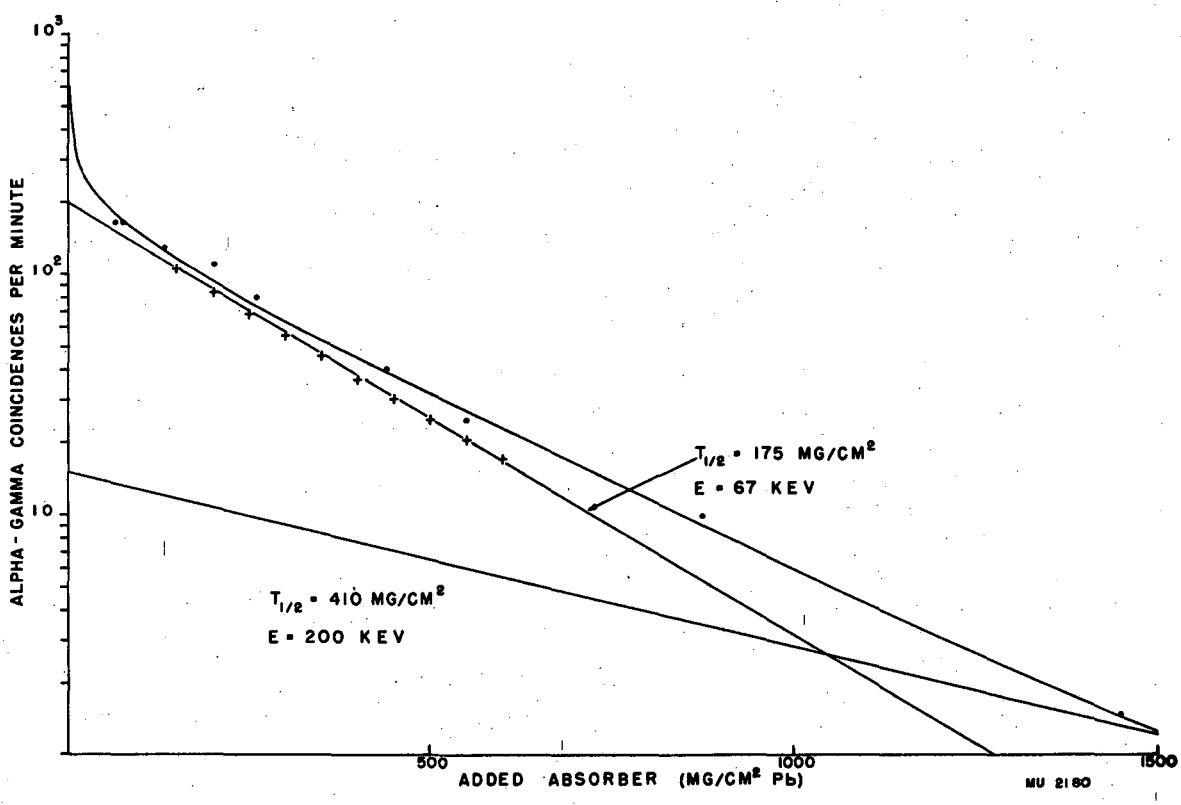
10^3
10^2
10
ALPHA-GAMMA COINCIDENCES PER MINUTE
$T_{1/2}$ = 175 MG/CM^2
E = 67 KEV
$T_{1/2}$ = 410 MG/CM^2
E = 200 KEV
500
1000
1500
ADDED ABSORBER (MG/CM^2 Pb)
MU 2180

Fig. 20

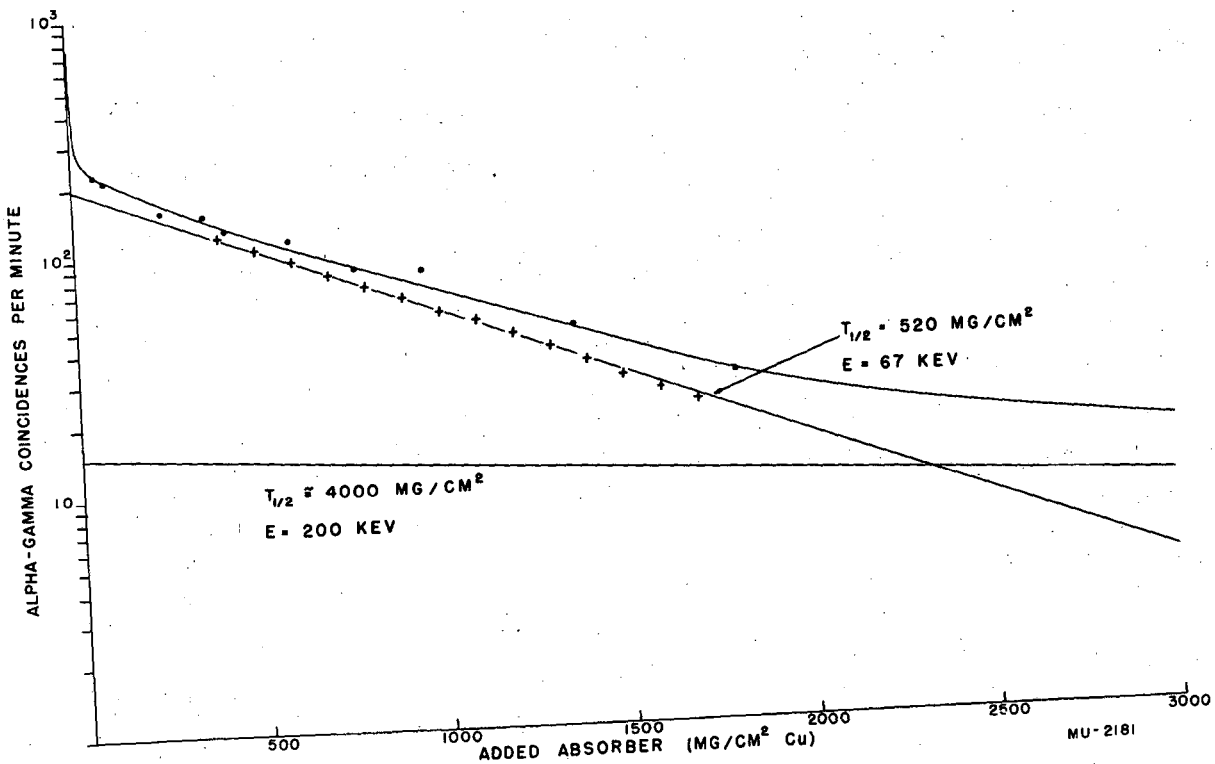
ALPHA-GAMMA COINCIDENCES PER MINUTE
10^3
10^2
10
$T_{1/2}$ = 520 MG/CM^2
E = 67 KEV
$T_{1/2}$ ≈ 4000 MG/CM^2
E = 200 KEV
500
1000
1500
2000
2500
3000
ADDED ABSORBER (MG/CM^2 Cu)
MU-2181

Fig. 21

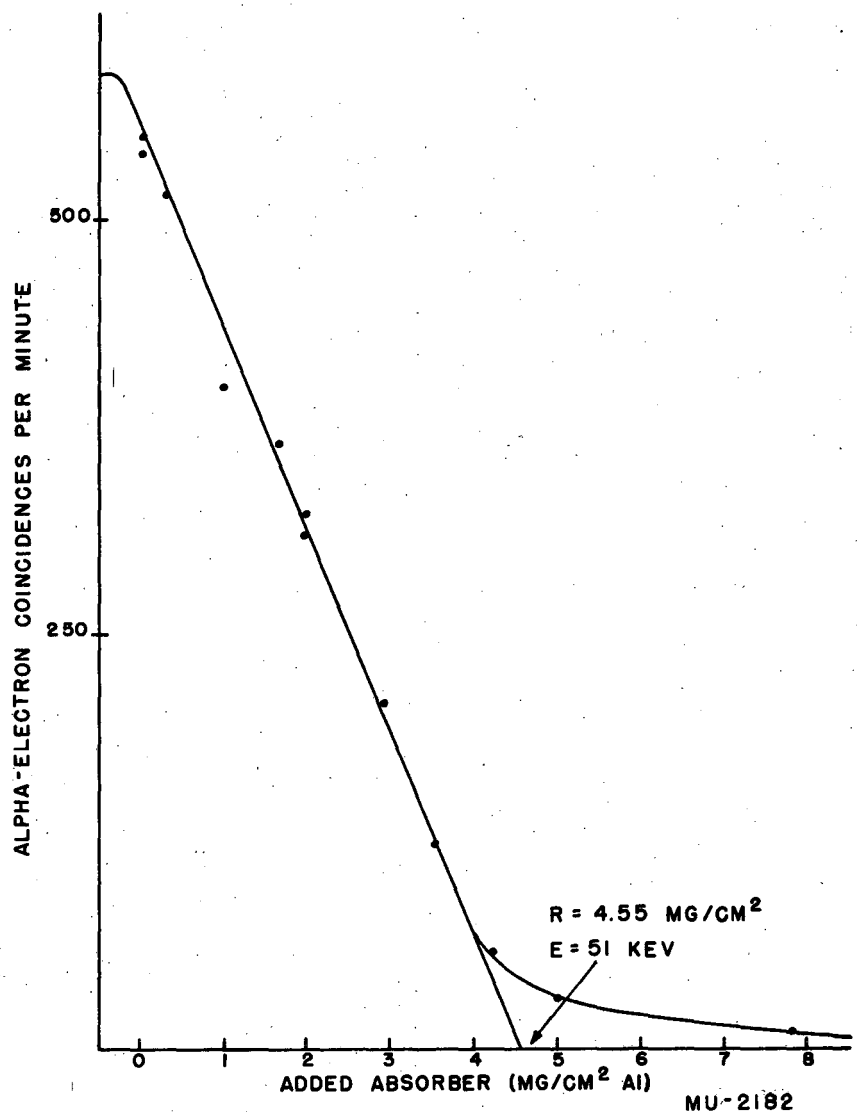
500
250
ALPHA-ELECTRON COINCIDENCES PER MINUTE
R = 4.55 MG/CM²
E = 51 KEV
0
1
2
3
4
5
6
7
8
ADDED ABSORBER (MG/CM² Al)
MU-2182

Fig. 22

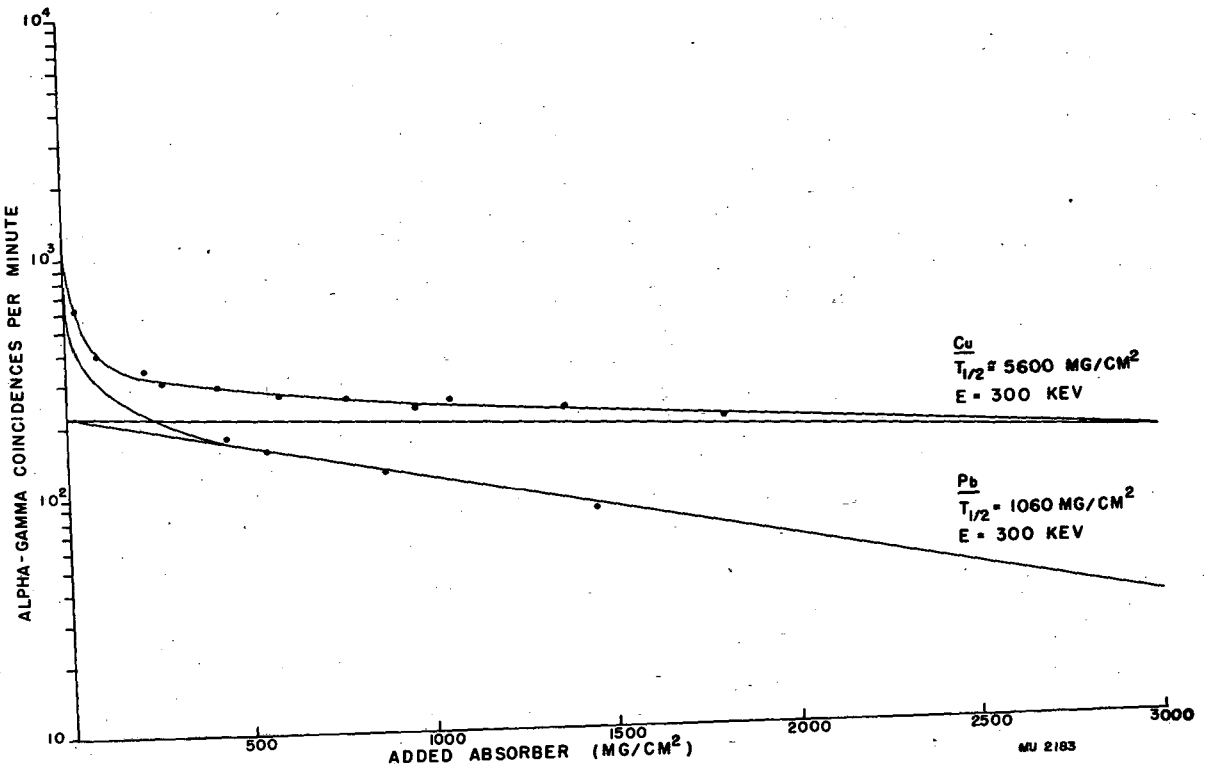
ALPHA-GAMMA COINCIDENCES PER MINUTE
10^4
10^3
10^2
10
500
1000
1500
2000
2500
3000
ADDED ABSORBER (MG/CM^2)
Cu
$T_{1/2}$ = 5600 MG/CM^2
E = 300 KEV
Pb
$T_{1/2}$ = 1060 MG/CM^2
E = 300 KEV
MU 2183

Fig. 23

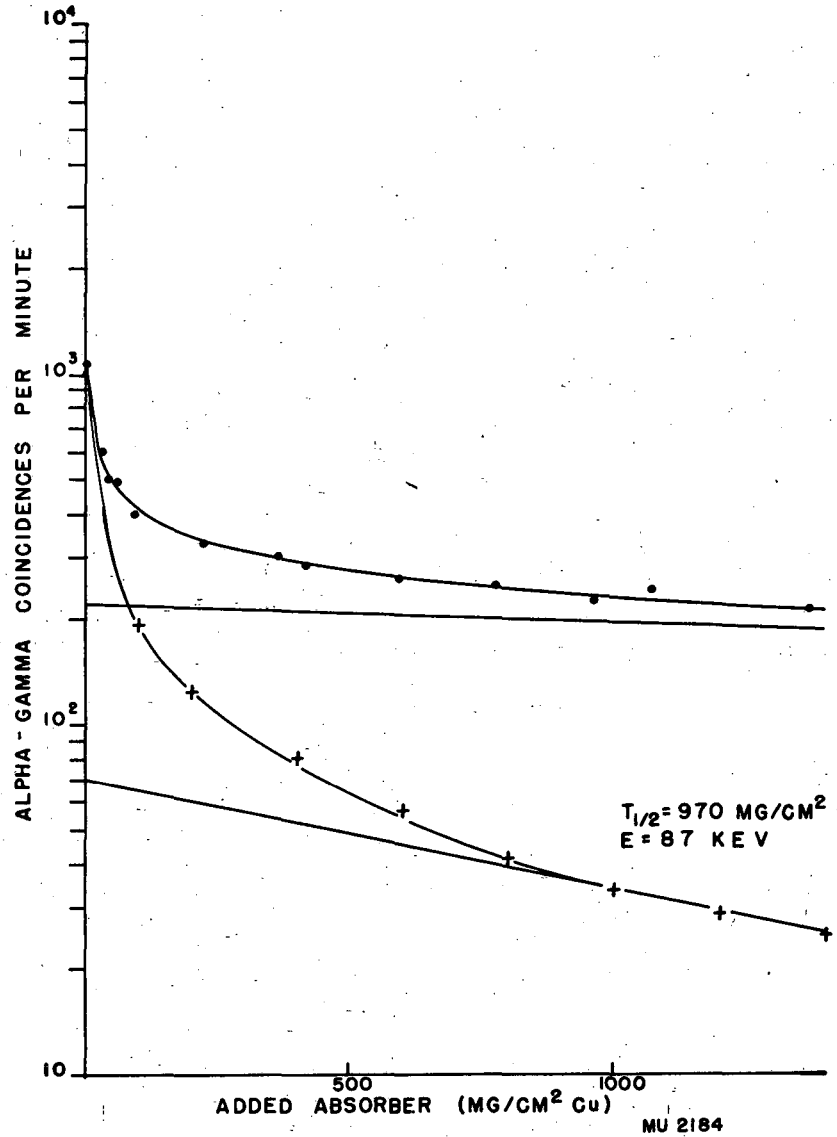
10^4
10^3
10^2
10
ALPHA - GAMMA COINCIDENCES PER MINUTE
500
1000
ADDED ABSORBER (MG/CM^2 Cu)
$T_{1/2}$= 970 MG/CM^2
E = 87 KEV
MU 2184

Fig. 24

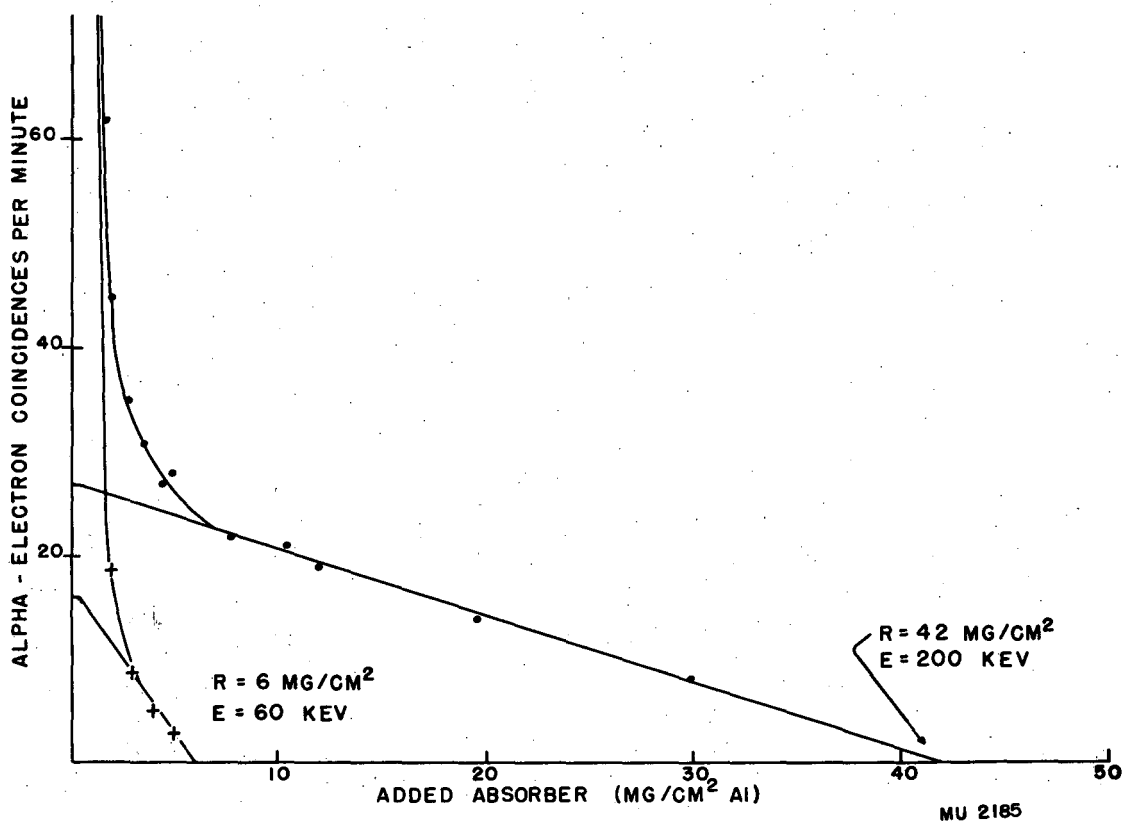
ALPHA - ELECTRON COINCIDENCES PER MINUTE
60
40
20
R = 6 MG/CM2
E = 60 KEV
R = 42 MG/CM2
E = 200 KEV
10
20
30
40
50
ADDED ABSORBER (MG/CM2 Al)
MU 2185

Fig. 25

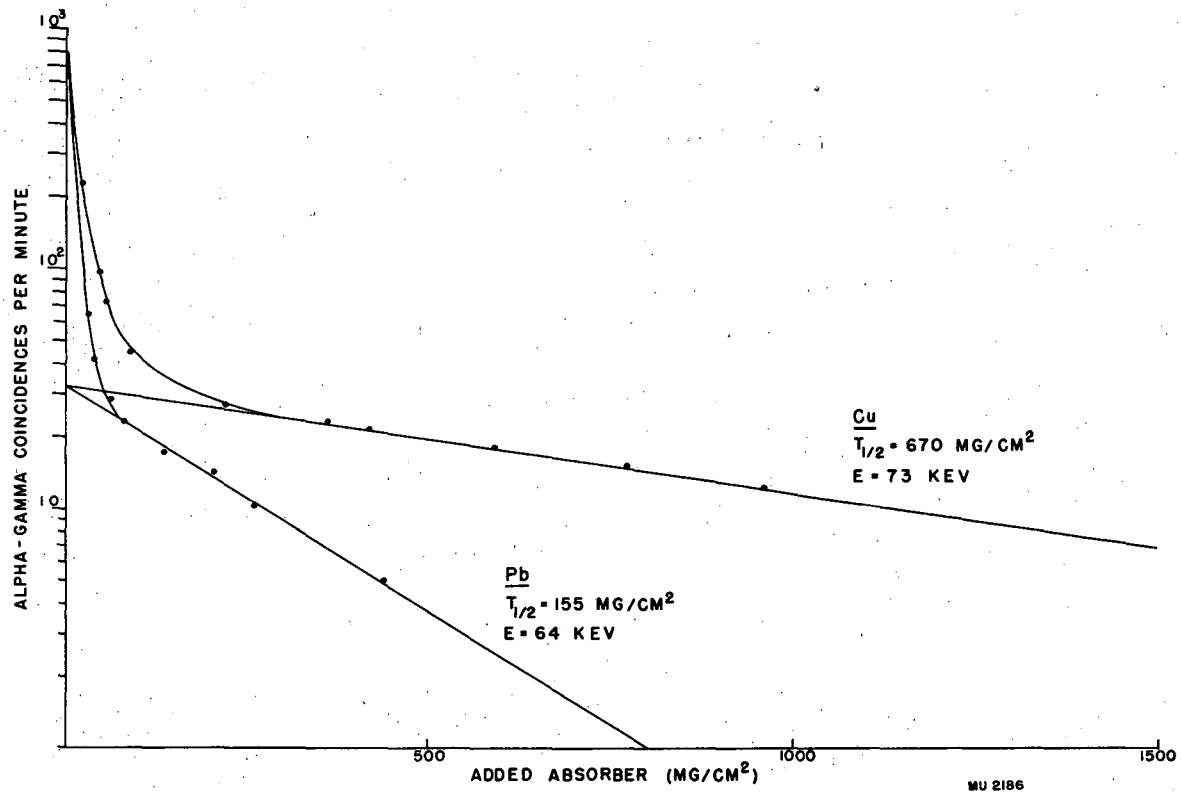
ALPHA-GAMMA COINCIDENCES PER MINUTE
10³
10²
10
Cu
T1/2 = 670 MG/CM²
E = 73 KEV
Pb
T1/2 = 155 MG/CM²
E = 64 KEV
500
1000
1500
ADDED ABSORBER (MG/CM²)
MU 2186

Fig. 26

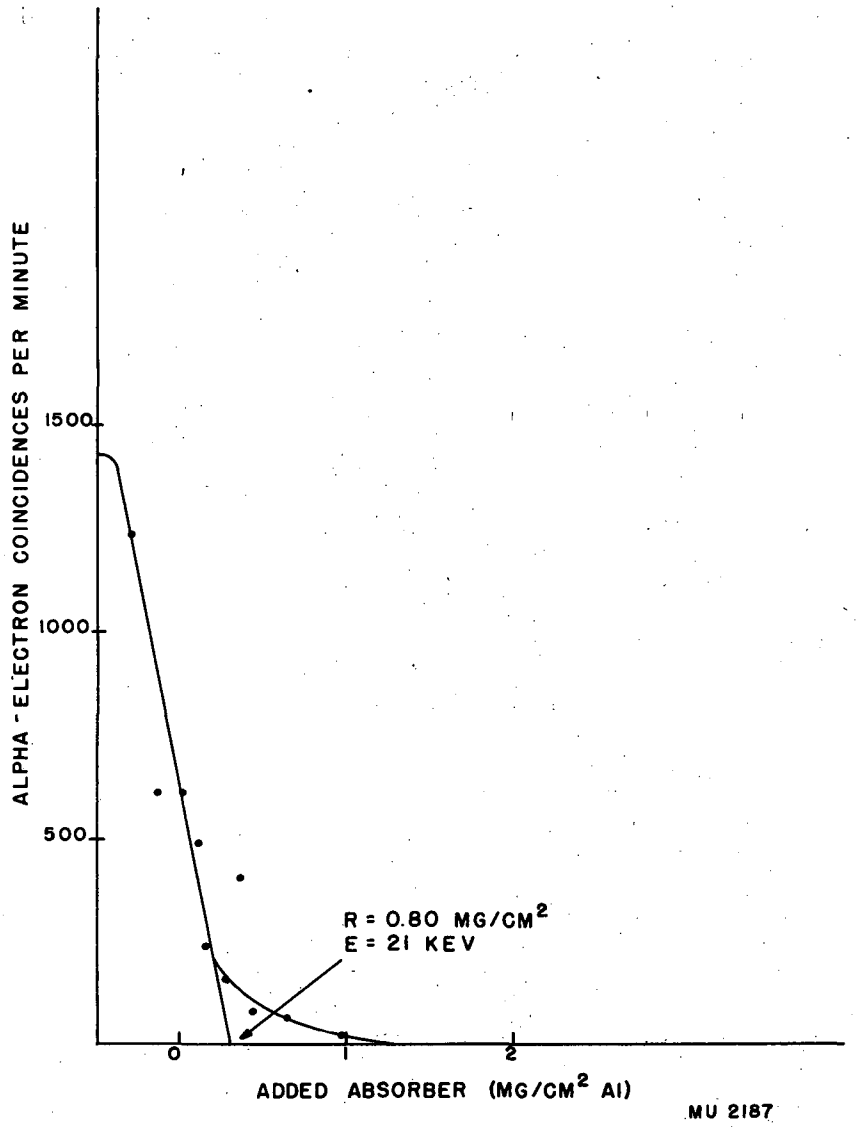
ALPHA - ELECTRON COINCIDENCES PER MINUTE
1500
1000
500
R = 0.80 MG/CM²
E = 21 KEV
0
1
2
ADDED ABSORBER (MG/CM² Al)
MU 2187

Fig. 27

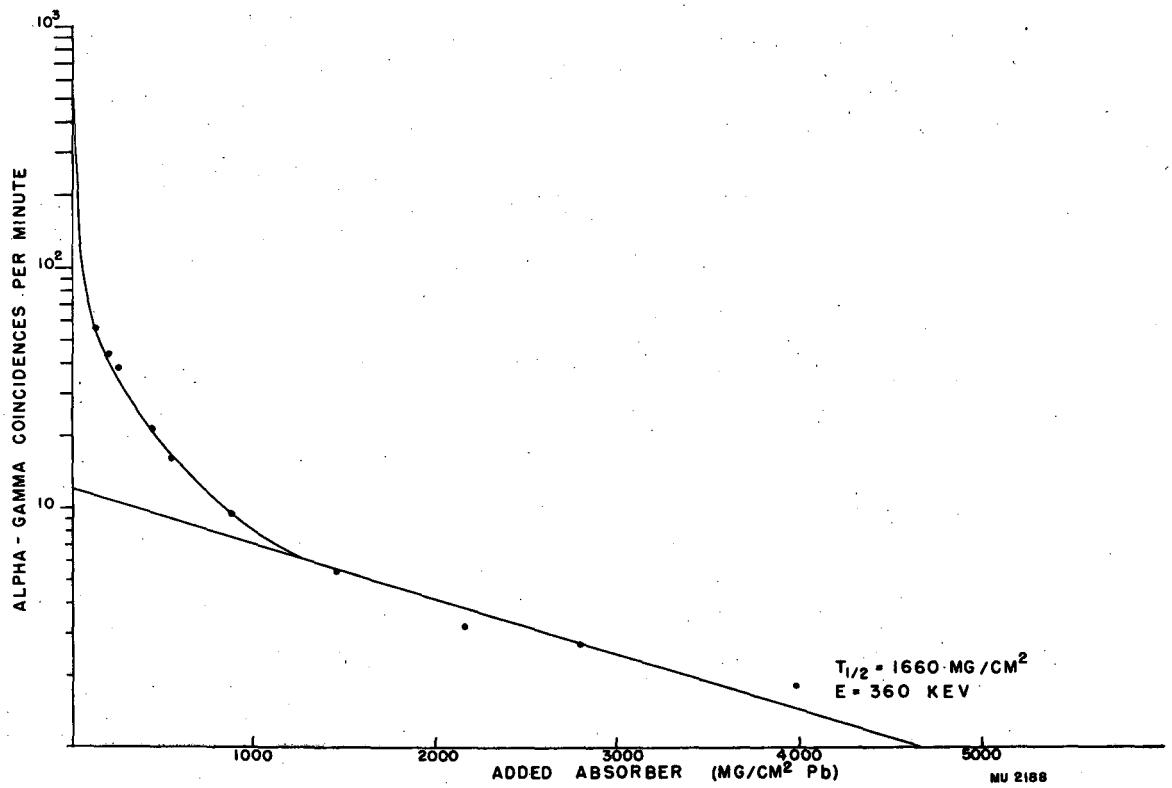
ALPHA - GAMMA COINCIDENCES PER MINUTE
10^3
10^2
10
1000
2000
3000
4000
5000
ADDED ABSORBER (MG/CM^2 Pb)
$T_{1/2}$ = 1660 MG/CM^2
E = 360 KEV
MU 2188

Fig. 28

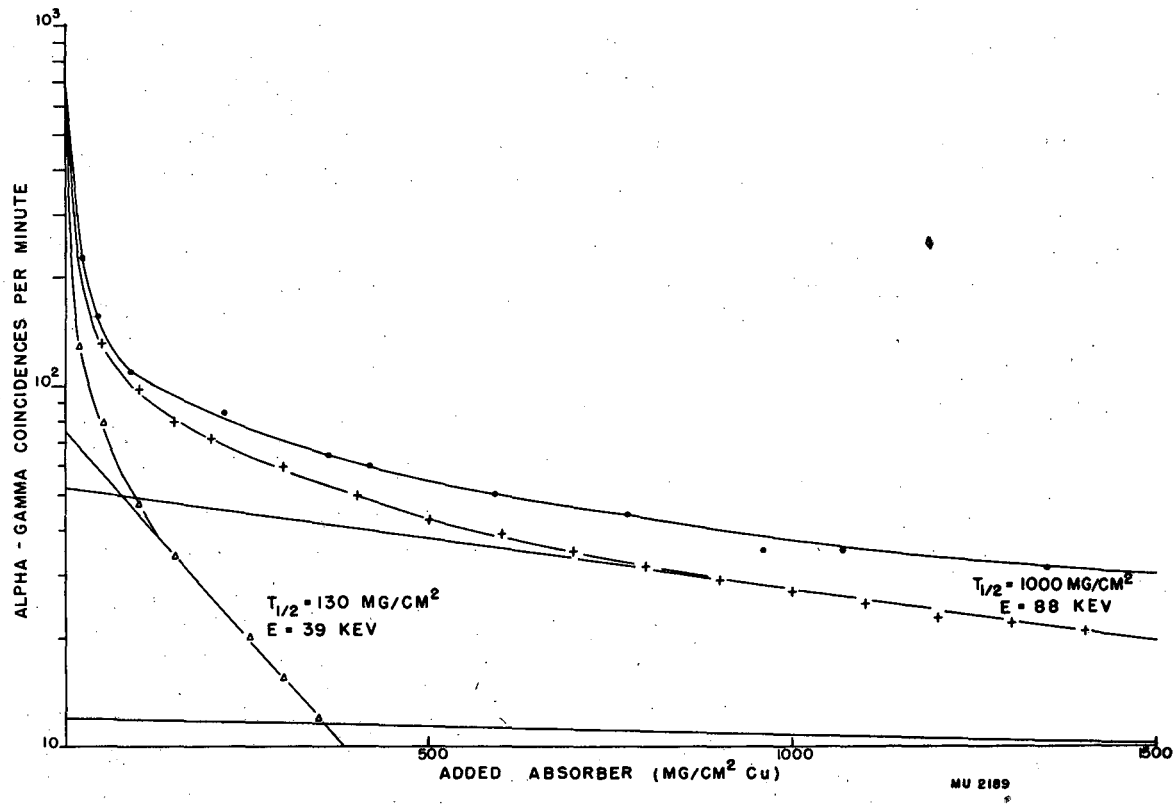
ALPHA - GAMMA COINCIDENCES PER MINUTE
10^3
10^2
10
500
1000
1500
ADDED ABSORBER (MG/CM^2 Cu)
$T_{1/2}$ = 130 MG/CM^2
E = 39 KEV
$T_{1/2}$ = 1000 MG/CM^2
E = 88 KEV
MU 2189

Fig. 29

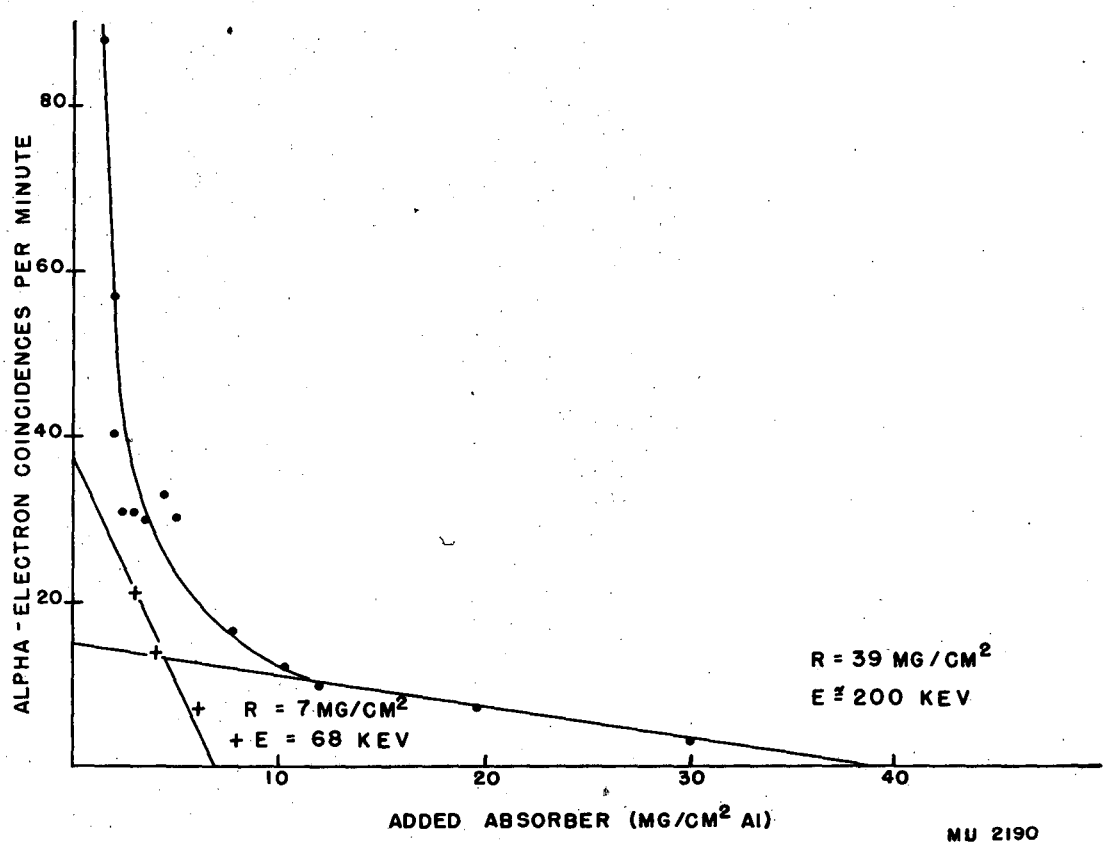
ALPHA - ELECTRON COINCIDENCES PER MINUTE
80
60
40
20
10
20
30
40
ADDED ABSORBER (MG/CM² Al)
R = 39 MG/CM²
E ≅ 200 KEV
+ R = 7 MG/CM²
+ E = 68 KEV
MU 2190

Fig. 30

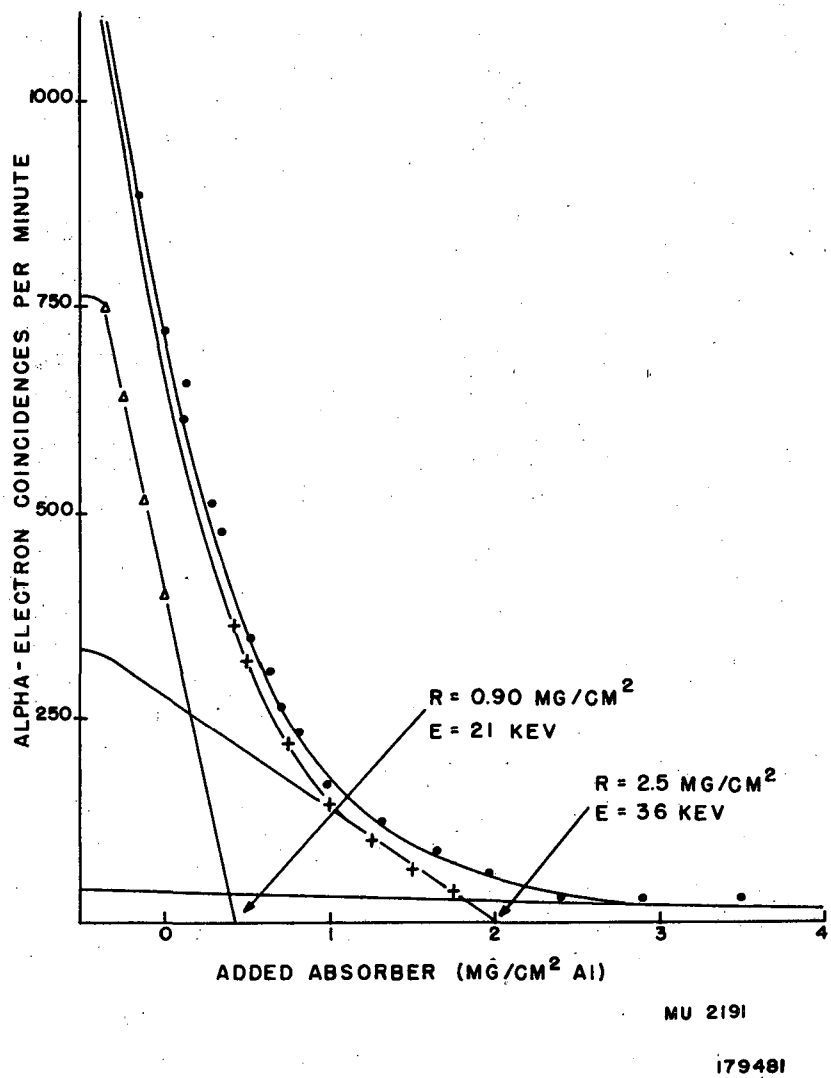
1000
750
500
250
ALPHA-ELECTRON COINCIDENCES PER MINUTE
R = 0.90 MG/CM2
E = 21 KEV
R = 2.5 MG/CM2
E = 36 KEV
0
1
2
3
4
ADDED ABSORBER (MG/CM2 Al)
MU 2191
179481

Fig. 31

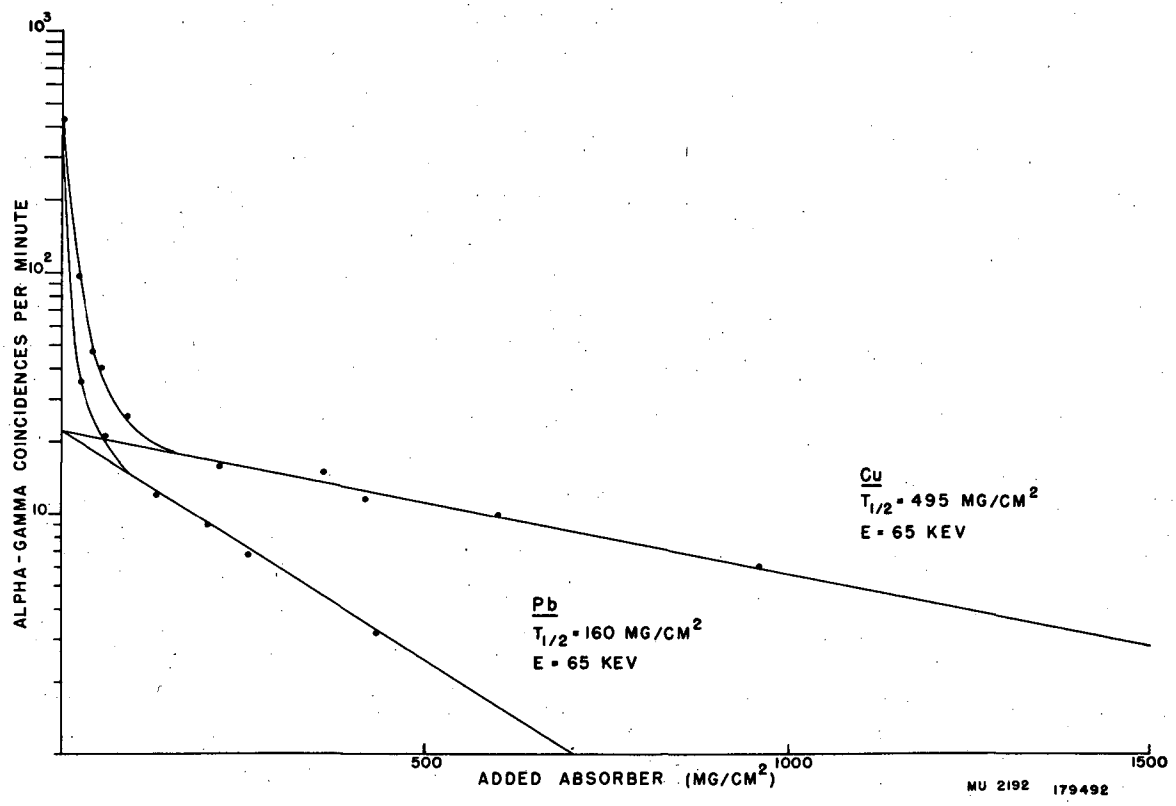
ALPHA-GAMMA COINCIDENCES PER MINUTE
10^3
10^2
10
500
1000
1500
ADDED ABSORBER (MG/CM^2)
Cu
$T_{1/2}$ = 495 MG/CM^2
E = 65 KEV
Pb
$T_{1/2}$ = 160 MG/CM^2
E = 65 KEV
MU 2192
179492

Fig. 32

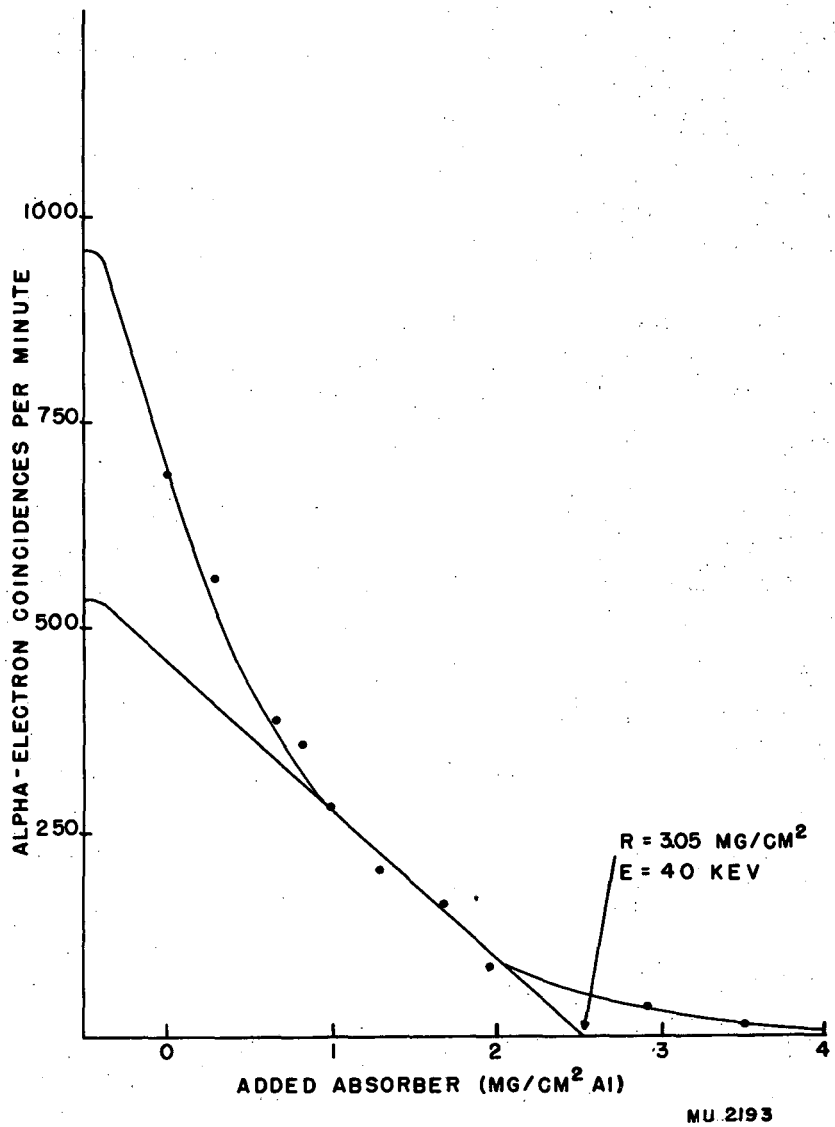
1000
750
500
250
ALPHA-ELECTRON COINCIDENCES PER MINUTE
R = 3.05 MG/CM²
E = 40 KEV
0
1
2
3
4
ADDED ABSORBER (MG/CM² Al)
MU 2193

Fig. 33