UCRL- 1438

OFFICIAL USE ONLY

DECLASSIFIED

UNIVERSITY OF CALIFORNIA — BERKELEY

TWO-WEEK LOAN COPY

This is a Library Circulating Copy which may be borrowed for two weeks. For a personal retention copy, call Tech. Info. Division, Ext. 5545

RADIATION LABORATORY

UCRL-1438 c.2

DISCLAIMER

This document was prepared as an account of work sponsored by the United States Government. While this document is believed to contain correct information, neither the United States Government nor any agency thereof, nor the Regents of the University of California, nor any of their employees, makes any warranty, express or implied, or assumes any legal responsibility for the accuracy, completeness, or usefulness of any information, apparatus, product, or process disclosed, or represents that its use would not infringe privately owned rights. Reference herein to any specific commercial product, process, or service by its trade name, trademark, manufacturer, or otherwise, does not necessarily constitute or imply its endorsement, recommendation, or favoring by the United States Government or any agency thereof, or the Regents of the University of California. The views and opinions of authors expressed herein do not necessarily state or reflect those of the United States Government or any agency thereof or the Regents of the University of California.

UNIVERSITY OF CALIFORNIA
Radiation Laboratory

Cover Sheet
Do not remove

INDEX NO. UCRL-1438
This document contains 35 pages
This is copy 58 of 83 series A

DECLASSIFIED

Issued to Information Division

~~OFFICIAL USE ONLY~~
Classification

Each person who receives this document must sign the cover sheet in the space below.

Route to	Noted by	Date	Route to	Noted by	Date

-5(M)

OFFICIAL USE ONLY

UCRL-1438
Chemistry-Transuranic Elements

UNIVERSITY OF CALIFORNIA

Radiation Laboratory

Contract No. W-7405-eng-48

DECLASSIFIED

THE VAPOR PRESSURE OF AMERICIUM TRIFLUORIDE

Merle Eugene Jones
(Thesis)

August 1951

Berkeley, California

OFFICIAL USE ONLY DECLASSIFIED

Standard Distribution: Series A	Copy Numbers
Argonne National Laboratory	1 - 8
Atomic Energy Commission, Washington	9 - 10
Brookhaven National Laboratory	11 - 14
Carbide and Carbon Chemicals Company (K-25 Plant)	15 - 16
Carbide and Carbon Chemicals Company (Y-12 Area)	17
Chicago Patent Group	18
duPont Company	19 - 23
General Electric Company, Richland	24 - 27
Hanford Operations Office	28
Idaho Operations Office	29 - 30
Iowa State College	31
Kellex Corporation	32
Knolls Atomic Power Laboratory	33 - 36
Los Alamos	37 - 39
Mound Laboratory	40 - 42
Naval Research Laboratory	43
New York Operations Office	44 - 45
North American Aviation, Inc.	46
Oak Ridge National Laboratory (X-10)	47 - 52
Patent Branch, Washington	53
Savannah River Operations Office	54
UCLA Medical Research Laboratory (Warren)	55
U. S. Naval Radiological Defense Laboratory	56
University of California Radiation Laboratory	57 - 60
University of Rochester	61 - 62
Wright-Patterson Air Force Base	63 - 64
Technical Information Service, Oak Ridge	65 - 79
Westinghouse Electric Corporation	80 - 82
Aircraft Nuclear Propulsion Project, Oak Ridge	83
Total	83

Declassification Procedure

Standard Distribution: Series B	Copy Numbers
Declassification Officer	1 - 6
Publication Officer	7
Patent Department	8 - 9
Area Manager, Berkeley	10
Information Division	11

INFORMATION DIVISION
Radiation Laboratory
University of California
Berkeley, California

~~OFFICIAL USE ONLY~~

THE VAPOR PRESSURE OF AMERICIUM TRIFLUORIDE

Merle Eugene Jones
Radiation Laboratory and Department of Chemistry
University of California, Berkeley, California

DECLASSIFIED

ABSTRACT

The vapor pressure of AmF_3 has been measured by the method of molecular effusion in the temperature range of 800 to 1200 degrees centigrade. The values obtained fit the equation $\log p = 10.89 - \frac{20030}{T}$ very well. A ΔH_o of sublimation of 109.4 kcal/mole was calculated from the measured vapor pressures assuming $\Delta C_p = -14$ e.u. This value for ΔC_p was also used in the calculation of the free energy of sublimation equation:

$$\Delta F = 109{,}400 - 2.3(-14)T \log T - 151.1\ T.$$

OFFICIAL USE ONLY

DECLASSIFIED

TABLE OF CONTENTS

		Page
I.	INTRODUCTION.	4
II.	APPARATUS.	4
III.	PROCEDURE.	11
	A. Runs.	11
	B. Measurement of the Orifice Area.	12
	C. Cleaning the Effusion Vessel.	13
	D. Cleaning the Target Plates	13
	E. Preparation of the AmF_3	13
	F. Analysis of the AmF_3	14
	G. Preparation of the Apparatus.	16
	H. Vapor Pressure Runs.	17
	I. Temperature Calibration	18
IV.	THEORETICAL EQUATION	24
V.	RESULTS	32
VI.	ACKNOWLEDGMENTS.	34
VII.	BIBLIOGRAPHY.	35

THE VAPOR PRESSURE OF AMERICIUM TRIFLUORIDE

Merle Eugene Jones
Radiation Laboratory and Department of Chemistry
University of California, Berkeley, California

DECLASSIFIED

I. INTRODUCTION

An accurate measurement of the vapor pressure of AmF_3 as a function of temperature was desired to determine some of its fundamental thermodynamic properties. With this end in mind measurements were carried out by the method of molecular effusion. The substance whose vapor pressure is to be measured is contained in an effusion vessel having a small orifice. The vapor from the substance saturates the interior of the vessel to the equilibrium pressure of the substance at the vessel's temperature. The vapor molecules, which effuse through the orifice into a high vacuum at a rate proportional to the saturation vapor pressure, travel in straight lines without collisions until they condense on the walls of the apparatus or other obstructions. Of these molecules, a fraction, calculable from the geometry of the system, pass through a collimator and condense on the target. Knowing the geometry of the system, the molecular weight of the vapor molecule, the effusion vessel temperature, and determining the rate of accumulation of material on the target, one can calculate the vapor pressure.

II. APPARATUS

The form of the vapor pressure apparatus (Figure 1) was based on the Westrum and Wallmann effusion apparatus.[1] The americium trifluoride

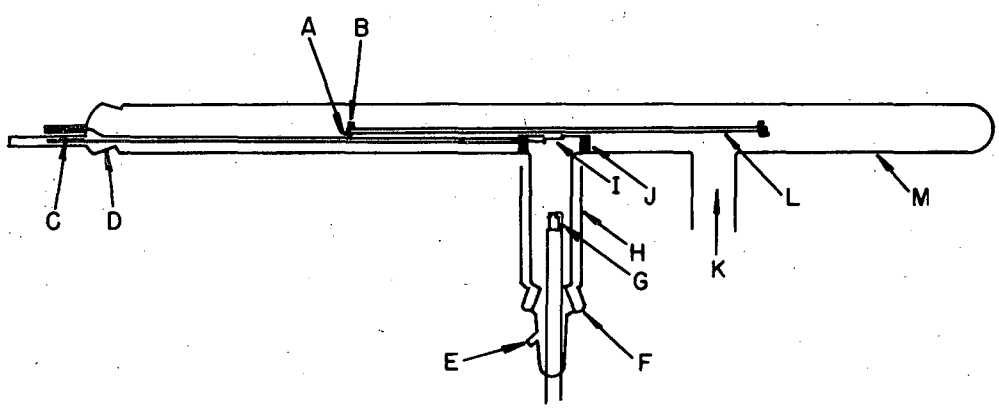

FIG. I

MU 2287

Effusion apparatus

A. Wheels on aluminum carrier.
B. Iron bars on carrier.
C. Iron for moving shutter.
D. Ground glass joint.
E. Sidearm for thermocouple leads.
F. Ground glass joint.
G. Crucible system.
H. Water jacket.
I. Shutter.
J. Stainless steel collimator.
K. 50 mm tube to nitrogen trap.
L. Aluminum target carrier.
M. 50 mm main tube.

was held in a tantalum effusion vessel (Figures 2 and 3). Tantalum has been found to be a very satisfactory material for this purpose as it could be easily machined and there have been no indications of a reaction between it and the AmF_3 at high temperatures. Such a reaction would probably have been discernible by inconsistent measurements, and by the spectrographic analysis of samples of the effusing compound showing the presence of tantalum. The top and bottom of the effusion vessel were threaded and a thin platinum gasket was used to obtain a tight seal. The top was covered with a 1/4 mil tantalum sheet containing the orifice. This opening was made with a sharply pointed stylus while the 1/4 mil tantalum sheet rested on a glass microscope slide. The burred edge of the orifice was flattened by rubbing the tantalum sheet between two microscope slides. The sheets were viewed under a microscope and only those having a nearly circular orifice with an area between 1×10^{-4} and 3×10^{-4} cm^2 were retained. The thin tantalum foil could not be spot welded directly to the top of the effusion vessel without holes being burned or torn in it so the foil was placed between the top and a five mil tantalum washer. No difficulty was experienced in spot welding this assembly. Special electrodes were used for this operation. The stationary electrode was threaded to hold the top in position while the movable electrode was a circular design. To help maintain the thin foil at the vessel's temperature the walls of the top were tapered toward the orifice. The top was tested for leaks by subjecting one side of the thin membrane to an air pressure several centimeters of mercury greater than atmospheric pressure. This was done by manipulating a

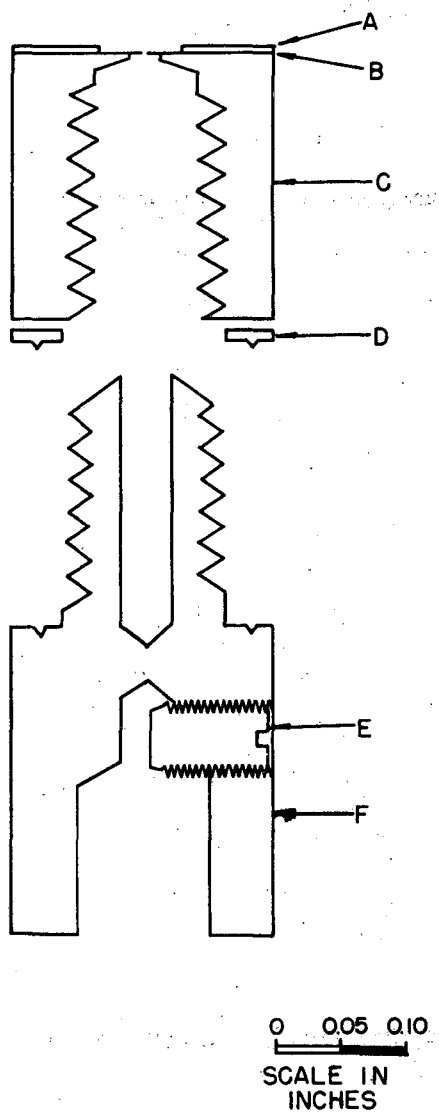

FIG. 2

MU 22AA

Effusion crucible

A. Five mil tantalum washer.
B. $\frac{1}{4}$ mil tantalum sheet.
C. Effusion vessel top.
D. Platinum gasket.
E. Screw to hold thermocouple.
F. Effusion vessel bottom.

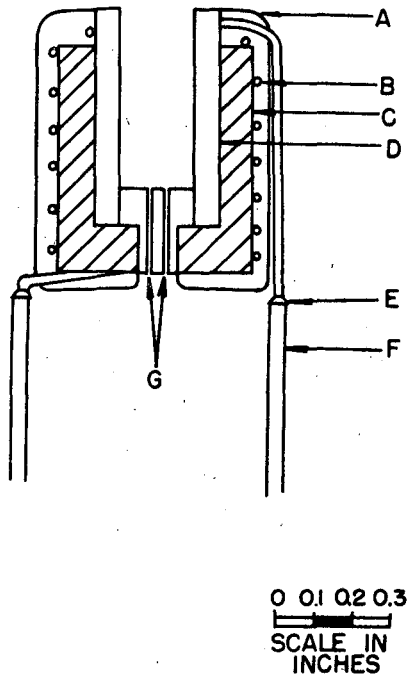

FIG. 3

MU 2289

Crucible assembly

A. Outer layer of beryllia.
B. Tungsten coil.
C. Beryllia crucible.
D. Beryllia cylinder.
E. Platinum weld.
F. 80 mil tungsten leads.
G. Holes for thermocouple leads.

piece of tygon tubing, which was one-fourth filled with mercury, to whose end the top was attached. The orifice was sealed with a small drop of Duco cement. A platinum; 90 percent platinum, 10 percent rhodium thermocouple was used to measure the temperature of the vessel. A hole was drilled in the bottom of the effusion vessel extending to within 1/32 inch of the chamber containing the americium trifluoride. A screw in the side of the vessel held the thermocouple in place, and the hole in the bottom was enlarged to prevent contact between the thermocouple leads and effusion vessel except at the screw.

The effusion vessel was electrically insulated from the 25 mil tungsten coil, which heated it, by a system of beryllia crucibles. (Figure 3) The effusion vessel fit snuggly into a beryllia cylinder which in turn was seated in a beryllia crucible. The top of the cylinder extended sufficiently above the crucible to allow one turn of the tungsten coil to extend around it while the other six turns were around the outer crucible. This assembly was designed to keep the top of the effusion vessel at a slightly higher temperature than the lower part. A beryllia plug in the bottom of the crucible positioned the effusion vessel so that its top was even with the top of the beryllia cylinder while two small holes in it guided the thermocouple wires. A thin layer of moist beryllia was placed over the tungsten coil and dried at high temperature. This served to reduce radiation losses. The tungsten coil was platinum soldered to 80 mil tungsten leads which passed out of the vacuum system through a special seal. The thermocouple leads, after extending about 1 1/2 inches below the crucible system, were

connected by small copper clamps to copper wires. The copper wires, protected by a bakelite insulator, went to a sidearm where they passed out of the vacuum system. These wires were sealed into the arm with apiezon wax.

The targets were 1 inch in diameter disks of 2 mil platinum. Twelve of these disks were held on an aluminum carrier which had two ball-bearing wheels and a small iron bar at both ends. The carrier could be easily moved inside of the main 50 mm glass tube with the aid of a permanent magnet held outside the apparatus. The target disks were centered over 3/4 inch holes in the carrier which acted as collimators. Another collimator, of stainless steel, with a larger hole protected the plates which were not being exposed. The semicircular endpices of this collimator fitted the 50 mm tubing and held the target carrier slightly off its wheels assuring a constant distance between the effusion vessel and the plate being exposed. At one end of the 50 mm tube was a ground glass joint which permitted the removal of the target carrier. A thin steel rod, embedded in the glass at this end, extended to the stainless steel collimator which it held in place. Under the stainless steel collimator was another piece of stainless steel which acted as a shutter. A steel rod extended from this shutter to a glass encased piece of soft iron which was free to slide back and forth in a glass tube attached to the end of the main 50 mm tube. This enabled one to control the position of the shutter with a permanent magnet held outside of the vacuum system.

The furnace assembly was held in a short 50 mm pyrex tube which was attached perpendicular to, and at the middle of, the main 50 mm tube. The short tube was surrounded by a water jacket for the purpose of cooling. Another 50 mm tube which was connected to the main tube led to a liquid nitrogen trap, then to two mercury diffusion pumps, and a mechanical forepump.

The system, after proper outgassing, was capable of a vacuum of 10^{-7} mm Hg as measured by an RCA (1949) ion gauge tube.

The electrical apparatus used in conjuction with the tungsten coil consisted of a transformer, a Variac for regulating the current, and Sola constant voltage transformer to reduce the effect of fluctuations in the 110 A.C. line voltage. A Westinghouse 20 amp ammeter and 30 volt voltmeter were used to make approximate temperature settings and thermocouple readings to 0.001 millivolt or approximately 0.1 degree C. were made with a potentiometer. The thermocouple was later calibrated by observing the melting points of various compounds.

III. PROCEDURE

A. Runs

Two separate groups of measurements of the vapor pressure of americium trifluoride were made using different crucibles and thermocouples. They will be referred to as run No. 1 and run No. 2. In run No. 2, after several sets of vapor pressure measurements had been made, the AmF_3 was removed from the effusion cricible and replaced with another sample of the material. Several sets of measurements were

subsequently made with this new material.

B. Measurement of the Orifice Area

The area of the orifice was measured using a camera lucida attachment in conjunction with a microscope. The image of the orifice was drawn on graph paper and later this sketch was cut out and weighed. A given number of squares of graph paper were cut from within the sketch and also weighed. The enlargement factor was obtained by placing a standard scale under the microscope and drawing its divisions on the graph. From these three measurements the orifice area could be calculated.

The orifice area was measured before and after the vapor pressure measurements were made. In run No. 1 the first orifice measurements were made after the effusion vessel had been degassed at a high temperature; the second measurements were made after the vapor pressure measurements. These areas agreed within experimental error. In run No. 2 the orifice area was determined without ever having heated the vessel to high temperature, then again after the vapor pressure measurements had been completed. The latter area was found to be about 10 percent larger. This was outside of the experimental error of about $\pm$ 1.5 percent. As there was no apparent trend in the vapor pressure measurements which would have indicated a progressive change in the orifice area, the final area determinations were used in the vapor pressure calculations.

C. Cleaning the Effusion Vessel

Carbon tetrachloride was used in place of the usual cutting oil during the machining of the effusion vessel. It made the cleaning operation simpler and more positive. The vessel was rinsed with CCl_4 and heated in dilute nitric acid for an hour. This was followed by several rinses with water and then dried.

D. Cleaning the Target Plates

The platinum target plates were heated in dilute nitric acid, rinsed several times with distilled water, and dried with acetone. Before the plates were placed in the target carrier they were heated to redness in a flame.

E. Preparation of the AmF_3

For run No. 1 an americium solution was used which was known to contain some iron. To remove this impurity AmF_3 was precipitated in a lustroid cone by adding hydrofluoric acid to a dilute nitric acid solution containing the americium. The precipitate was washed twice with distilled water and then dissolved in a mixture of boric and nitric acids. The resulting solution was diluted with distilled water and the hydroxide was precipitated with ammonia gas. The hydroxide was washed once with distilled water and dissolved in dilute nitric acid. Once again hydrofluoric acid was added and the fluoride precipitate was washed twice with distilled water. The slurry was transferred to a small platinum crucible which was placed in a beryllia outer crucible that fit

a tungsten furnace coil. This unit was placed in a vacuum system and the system was allowed to pump down for several hours. The crucible was then heated to 300 degrees C. for twenty minutes. Later about 300 micrograms of the AmF_3 were transferred to the effusion vessel.

For run No. 2 a solution was used which contained about 550 micrograms of americium and only small amounts of impurities. This solution was diluted slightly in a lustroid cone with double distilled water and hydrofluoric acid was added. The fluoride precipitate was washed three times with double distilled water and the slurry was transferred to a small platinum crucible. The material was dried in the same way as the material in run No. 1. About 200 micrograms of this AmF_3 was placed in the effusion vessel for vapor pressure measurements. After several series of measurements this material was removed and another 200 micrograms added.

F. Analysis of the AmF_3

After the AmF_3 was dried for run No. 1, a small amount of the material was placed in a pyrex capillary for x-ray crystallographic analysis. The analysis indicated an orthorhombic structure isostructural with LaF_3. After the vapor pressure measurements had been completed some of the material was removed from the effusion vessel for x-ray and spectrographic analysis. This material had a cubic structure which could not be positively identified with any americium compound. AmF_2 and AmOF were suggested, but the spectrographic analysis indicated approximately 18 mole percent iron which may have contributed to a change

in structure upon heating.

Table I

Spectrographic Analysis

Element	Micrograms
Am	70
Ca	0.5
Fe	2.9
Mg	0.09
La	none detected

An alpha pulse analysis[2] of one of the first targets exposed did not detect any Cm^{242} or Pu^{239}.

After run No. 2 some of the material was removed from the effusion vessel and analyzed. The x-ray crystallographic analysis identified the orthorhombic structure characteristic of AmF_3 while the spectrographic analysis indicated total impurities of less than 8 mole percent.

Table II

Spectrographic Analysis

Element	Micrograms
Am	40
Al	0.19
Ca	<0.04
Fe	0.19
Mg	0.04
La	0.05
Ta	none detected

G. Preparation of the Apparatus

Before introducing a sample into the effusion vessel, the vapor pressure apparatus was assembled and allowed to pump down overnight. The pressure was about 1×10^{-6} mm Hg. The effusion vessel was heated to 1300 degrees C. and this temperature was maintained for several hours. Meanwhile, the apparatus was flamed with a hand torch. When the apparatus had been allowed to cool and before loading the effusion vessel with AmF_3, dry nitrogen was introduced into the system increasing the pressure to 1 atmosphere. The apparatus was allowed to remain in this condition for about 1/2 hour before the effusion vessel was removed. While the effusion vessel was out of the vapor pressure apparatus for loading it was kept under a nitrogen atmosphere, but during the reassembly

it was necessary to expose it to the air for a short period of time.

H. Vapor Pressure Runs

The effusion vessel loaded with AmF_3 was placed in the beryllia crucibles, and the thermocouple wires were fastened to the copper leads with the small clamps. This assembly was then placed in the vapor pressure apparatus, and the system was allowed to pump down overnight.

In the vapor pressure runs, the collimator opening was covered by the shutter until the temperature of the effusion vessel, as determined by the thermocouple readings, had reached equilibrium. Meanwhile, the plate which was to be exposed was positioned above the collimator opening. Marks on the carrier and the walls of the apparatus made the positioning quite reproducible. Upon the initial heating the pressure in the system went up to about 10^{-4} mm Hg, but dropped rapidly to 10^{-5} mm and remained below this value the rest of the run. When the equilibrium temperature was reached the shutter was moved aside and thermocouple readings were taken each minute. The time of exposure for each plate, fifteen minutes for run No. 1 and ten minutes for run No. 2, was determined with a watch having a sweep-second hand. The temperature of the effusion vessel seldom varied more than four degrees during an exposure. The carrier held twelve plates, but the size of the stainless steel collimator was such that the end target plates could not be aligned with the effusion vessel. Ten exposures could be made without removing the carrier and reloading it. The end target plates never

indicated a trace of the effusing compound upon alpha counting. After the ten targets had been exposed the system was cooled and was brought to atmospheric pressure with dry nitrogen. The joint on the end of the main tube was opened and the carrier removed. The exposed plates were placed in a lucite box and set aside for counting. The carrier was reloaded with freshly flamed platinum disks and replaced in the vapor pressure apparatus.

I. Temperature Calibration

The thermocouple was not removed from its position within the effusion vessel after the vessel had been loaded. When the vessel was removed from the apparatus to be reloaded or cleaned, the clamps connecting the thermocouple wires with the copper leads were unfastened. Tests in which an optical pyrometer was used to measure the temperature of the effusion vessel indicated that the removal and replacement of the thermocouple leads in the clamps did not affect the thermocouple readings. However, when the leads were interchanged there was a 0.1 to 0.2 millivolt difference. After the vapor pressure measurements had been completed the effusion vessel was decontaminated (with the thermocouple still in place) and a temperature calibration was made by observing the melting points of various salts. $K_2Cr_2O_7$, Na_2CO_3, LiCl, $NaCl_2$, K_2CrO_4, Na_2SO_4, and K_2SO_4 were used. Several properties which a material must possess to be useful in this type of temperature calibration are; (1) the melting point must be in the desired range and be accurately known,

(2) the compound must be availabe in a pure form, (3) its vapor pressure must not be too high in the region below its melting point, and (4) it should be easily removable from the vessel. A small amount of the salt to be used was ground to a powder and placed in the effusion vessel from which the thin foil had been removed. The furnace assembly was placed in a vacuum apparatus and slowly heated. The thermocouple voltage was followed with the potentiometer as the compound was observed through a small telescope. The thermocouple reading was recorded when melting of the compound became evident. Several observations were made with each compound, and the results agreed within a few hundredths of a millivolt.

Temperature Calibration

Run No. 1

Compound	Melting Point degree C.	Thermocouple Reading millivolts
$CaCl_2$	772	5.68
		5.66
		5.64
Na_2SO_4	884	6.60
		6.63
		6.57
		6.59
$K_2Cr_2O_7$	398	2.18
Na_2CO_3	851	6.27
		6.27
LiCl	613	4.12
		4.15
$K_2Cr_2O_7$	398	2.22
K_2CrO_4	975	7.49
		7.45
$CaCl_2$	772	5.60
		5.58
$K_2Cr_2O_7$	398	2.29
		2.33
LiCl	613	4.18
K_2CrO_4	975	7.44

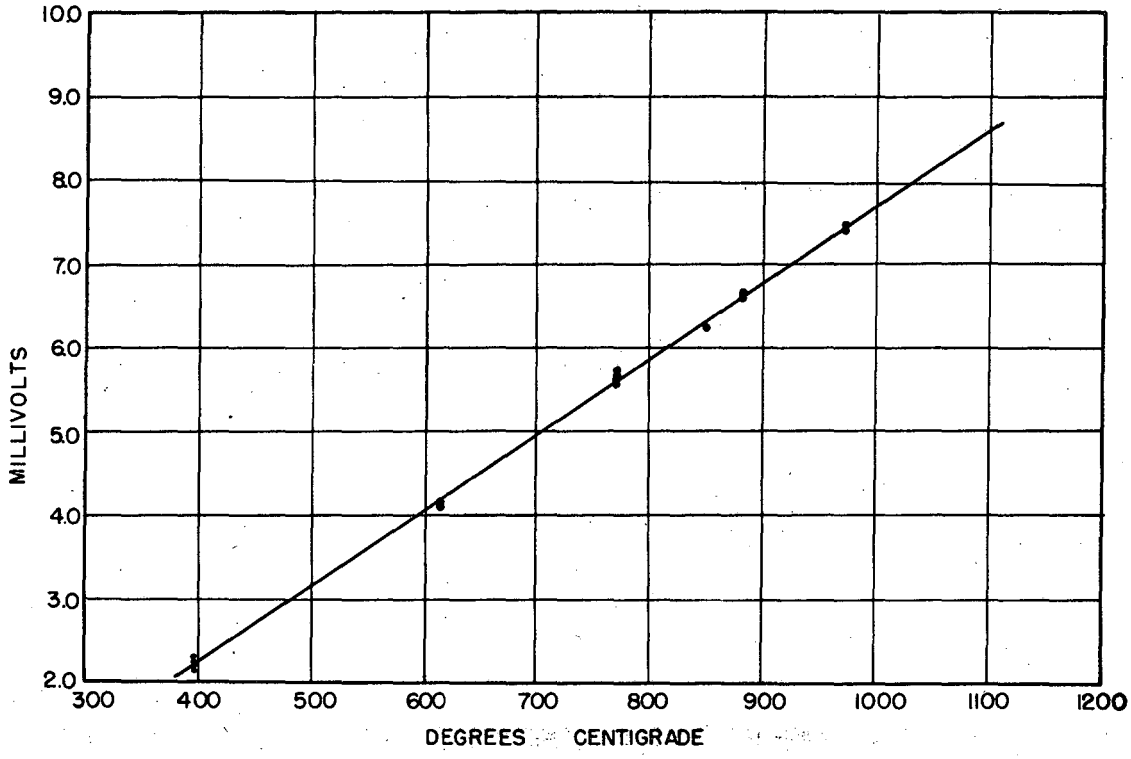

GRAPH I

MU 2290

Temperature calibration. Run #1
Thermocouple readings in millivolts plotted against the melting point of the compound in degrees Centigrade.

Temperature Calibration

Run No. 2

Compound	Melting Point degree C.	Thermocouple Reading millivolts
$K_2Cr_2O_7$	398	2.78
		2.78
K_2CrO_4	975	8.33
		8.375
Na_2SO_4	884	7.46
		7.48
$K_2Cr_2O_7$	398	2.72
		2.76
Na_2CO_3	851	7.17
		7.16
K_2SO_4	1069	9.15
		9.22
		9.21
$K_2Cr_2O_7$	398	2.77
K_2SO_4	1069	9.20
		9.18
$K_2Cr_2O_7$	398	2.72
		2.72
Na_2CO_3	851	7.15
		7.11
K_2SO_4	1069	9.29

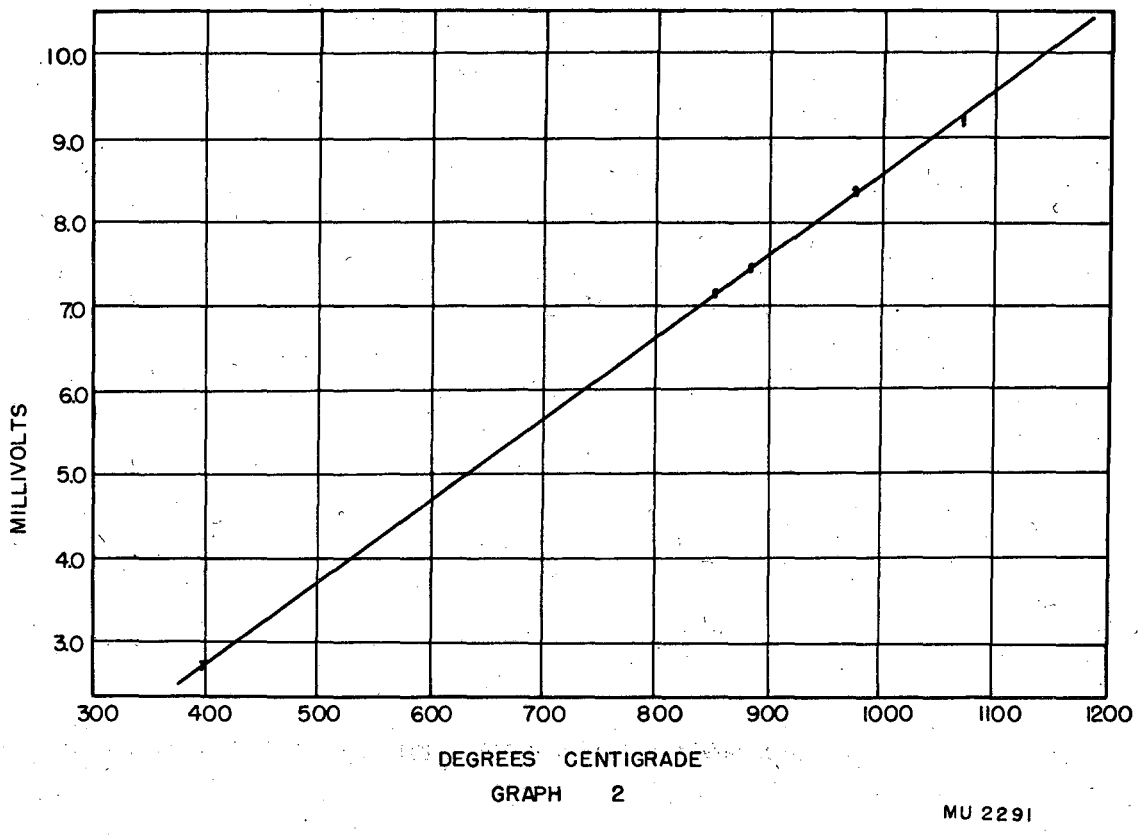

Temperature calibration. Run #2.

Thermocouple readings in millivolts plotted against the melting point of the compound in degrees Centigrade.

IV. THEORETICAL EQUATION

Applying the kinetic theory of gases to the method of molecular effusion as carried out in a system basically similar to the one used in this work, Simpson[3,4] obtained the equation:

$$p = \frac{c}{\tau}\sqrt{T}\,\frac{r^2}{aA\sqrt{M}}\left(1 + \frac{\rho^2}{r^2}\right)\frac{10^{-6}\pi\sqrt{2\pi R}}{g\ s\ 60}\ \text{dynes/cm}^2$$

p = saturation vapor pressure of the substance in cgs units

c = counts per minute for a particular target after applying a correction for background

τ = time in minutes the particular target has been exposed to the vapor beam

T = absolute temperature of the effusion vessel

r = distance from the orifice to the collimator in cm

a = area of the orifice in cm^2

A = area of the collimator in cm^2

M = molecular weight of the vapor molecule

ρ = radius of the collimator in cm

R = molecular gas constant in cgs units

s = specific activity of the substance in disintegrations per minute per microgram

g = geometrical efficiency of the alpha chamber

Grouping the constants which apply to all compounds and systems the equation for the vapor pressure in mm Hg becomes:

$$p = \frac{c}{\tau}\sqrt{T}\,\frac{r^2}{aA\sqrt{M}\,gs}\left(1 + \frac{\rho^2}{r^2}\right) 8.976 \times 10^{-7}\ \text{mm Hg}$$

For run No. 1	For run No. 2
τ = 15 minutes	τ = 10 minutes
r = 7.66 cm	r = 8.15 cm
a = 2.34×10^{-4} cm^2	a = 1.58×10^{-4} cm^2
A = 2.39 cm^2	A = 2.39 cm^2
ρ = 0.873 cm	ρ = 0.873 cm

Assuming the molecular weight of the americium trifluoride to be 298 and gs to be 2.93×10^6 alpha counts per minute per microgram as based on a 470 year half-life[6] for Am^{241} and 52 percent geometry for the alpha chamber, the equations are:

Run No. 1 $p = c\sqrt{T}\,(1.26 \times 10^{-10})$ mm Hg for a 15 minute exposure

Run No. 2 $p = c\sqrt{T}\,(3.14 \times 10^{-10})$ mm Hg for a 10 minute exposure.

Vapor Pressure of Americium Trifluoride

Run No. 1

Target no.	Vapor Pressure mm Hg	Recip. Temp. x 10^5	Target no.	Vapor Pressure mm Hg	Recip. Temp. x 10^5
I-10	2.00×10^{-8}	91.74	III-5	6.13×10^{-6}	80.97
I-9	5.76×10^{-8}	89.85	III-4	1.13×10^{-5}	79.55
I-8	5.57×10^{-8}	89.29	III-3	7.05×10^{-8}	90.17
I-7	2.10×10^{-7}	87.03	III-2	2.25×10^{-7}	87.87
I-3	3.21×10^{-8}	91.24	IV-11	1.12×10^{-7}	89.61
I-2	1.44×10^{-7}	88.03	IV-10	1.61×10^{-7}	88.42
II-11	1.23×10^{-8}	94.34	IV-9	3.04×10^{-6}	82.30
II-9	2.27×10^{-8}	92.94	IV-8	7.91×10^{-6}	79.81
II-8	3.84×10^{-8}	90.91	IV-7	1.92×10^{-6}	82.99
II-7	1.40×10^{-7}	88.57	IV-5	6.51×10^{-6}	80.26
II-6	1.45×10^{-8}	92.85	IV-4	1.52×10^{-5}	78.55
II-5	2.66×10^{-7}	86.81	IV-3	1.75×10^{-7}	87.95
II-4	8.31×10^{-7}	84.82	IV-2	1.17×10^{-6}	84.25
II-3	2.35×10^{-6}	82.99			
II-2	6.66×10^{-8}	90.50			
III-11	2.44×10^{-8}	92.76			
III-10	7.80×10^{-8}	90.33			
III-9	1.28×10^{-7}	89.13			
III-8	4.01×10^{-7}	86.88			
III-7	1.20×10^{-6}	84.17			
III-6	2.89×10^{-6}	82.44			

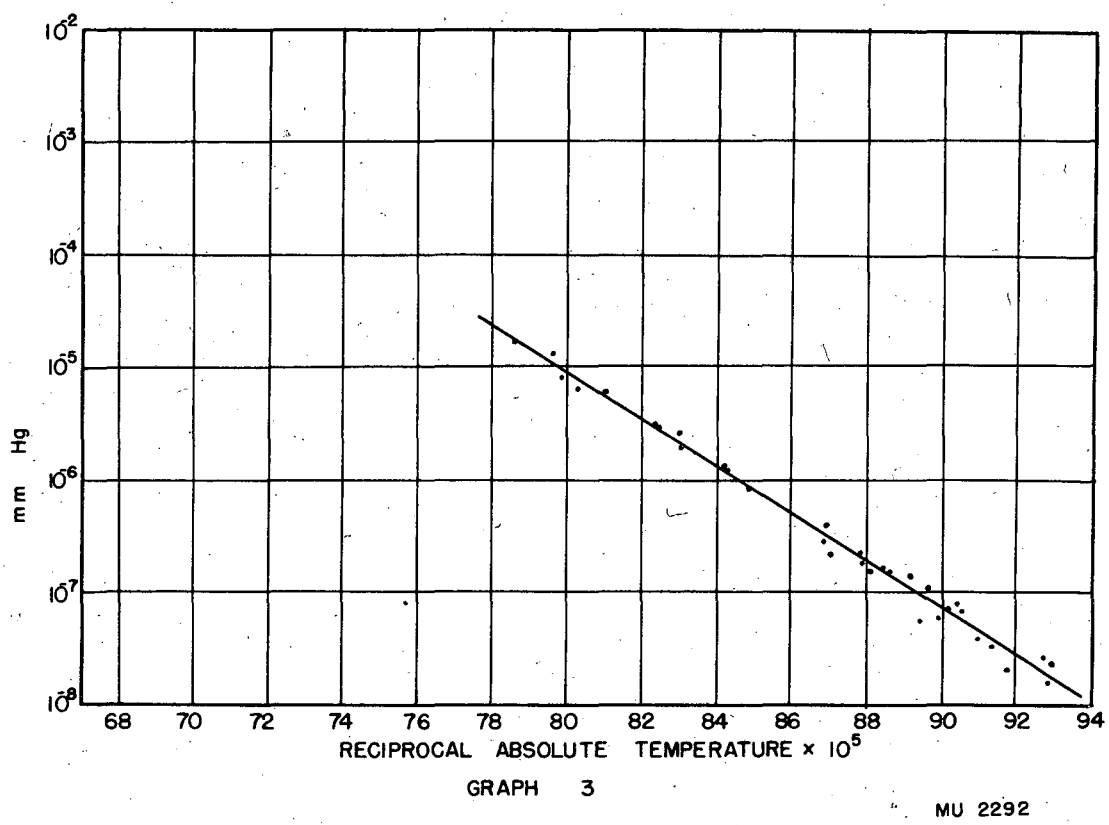

Vapor pressure. Run #1

The vapor pressure in mm Hg. plotted against the reciprocal of the absolute temperature times 10^5.

Vapor Pressure of Americium Trifluoride

Run No. 2

Target no.	Vapor Pressure mm Hg	Recip. Temp. x 10^5	Target no.	Vapor Pressure mm Hg	Recip. Temp. x 10^5
I-10	2.37×10^{-8}	92.85	III-5	1.59×10^{-6}	83.75
I-9	3.70×10^{-7}	86.66	III-4	1.03×10^{-5}	79.81
I-8	1.85×10^{-6}	82.92	III-3	1.74×10^{-5}	78.68
I-3	2.80×10^{-8}	91.49	III-2	1.82×10^{-4}	73.37
I-2	5.56×10^{-7}	85.54			
II-10	2.69×10^{-8}	92.34			
II-9	6.13×10^{-7}	85.62			
II-8	4.66×10^{-6}	81.17			
II-7	1.25×10^{-4}	74.13			
II-6	1.47×10^{-3}	68.82			
II-5	4.76×10^{-7}	86.06			
II-4	6.54×10^{-6}	80.52			
II-3	6.41×10^{-5}	76.64			
II-2	4.94×10^{-4}	71.17			
III-11	1.43×10^{-7}	88.89			
III-10	2.57×10^{-7}	87.72			
III-9	3.37×10^{-6}	82.03			
III-8	6.90×10^{-5}	75.47			
III-7	1.65×10^{-4}	74.80			
III-6	5.71×10^{-8}	91.66			

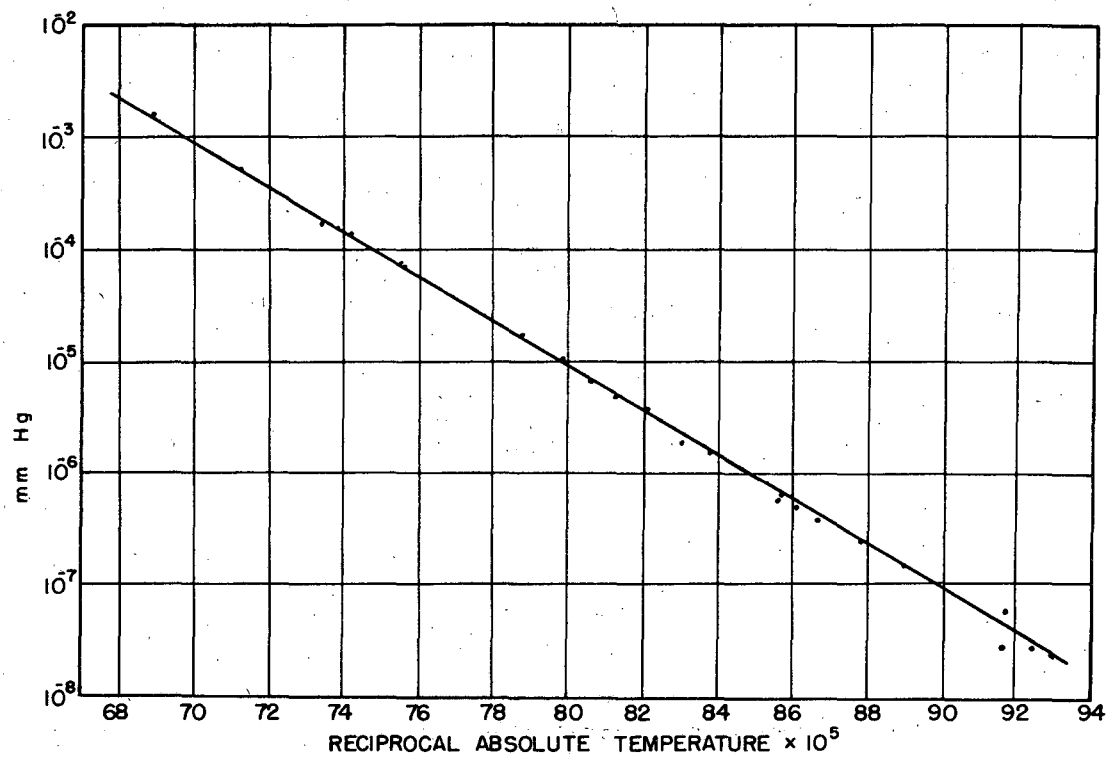

GRAPH 4

MU 2293

Vapor pressure. Run #2.

The vapor pressure in mm Hg. plotted against the reciprocal of the absolute temperature times 10^5.

Vapor Pressure of Americium Trifluoride

Run No. 2

Target no.	After Reloading Vapor Pressure mm Hg	Recip. Temp. x 10^5
IV-11	1.60×10^{-7}	91.66
IV-10	4.55×10^{-7}	89.29
IV-9	1.28×10^{-6}	87.11
IV-8	2.85×10^{-6}	84.82
IV-7	4.56×10^{-6}	83.13
IV-6	7.14×10^{-6}	81.70
IV-5	1.27×10^{-5}	80.06
IV-4	4.94×10^{-5}	76.92
IV-3	1.99×10^{-6}	83.40
IV-2	1.47×10^{-7}	89.21
V-11	9.03×10^{-8}	89.45
V-10	3.17×10^{-7}	87.34
V-9	1.67×10^{-6}	83.68
V-8	3.70×10^{-6}	82.24
V-7	1.05×10^{-5}	80.00
V-6	3.85×10^{-5}	77.28
V-5	7.01×10^{-5}	75.93
V-4	1.61×10^{-4}	73.96
V-3	2.25×10^{-7}	88.26
V-2	8.60×10^{-7}	85.25

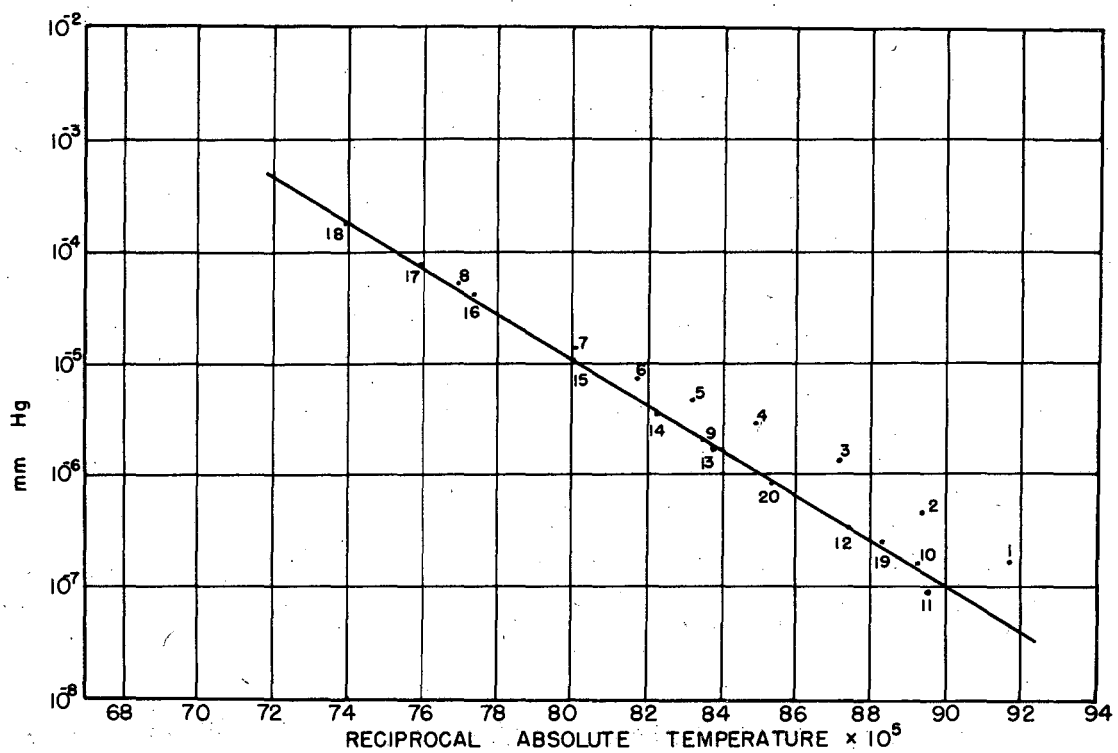

GRAPH 5

MU 2294

Vapor pressure. Run #2 after reloading.

The vapor pressure in mm Hg. plotted against the reciprocal of the absolute temperature times 10^5. The numbers indicate the order of exposure.

V. RESULTS

The thermocouple readings obtained in the temperature calibrations of the effusion vessels were plotted against the melting point temperatures for the various salts (graphs 1 and 2). For each run a straight line fit the data. The large differences between the melting point-EMF curves obtained for the two runs was probably due to a difference in the thermocouple wires used. A thermocouple made from the same platinum-rhodium wire that was used in run No. 1 deviated as much as 50 degrees C. from a calibrated thermocouple when the two were compared.

The vapor pressure data for run No. 1 (iron impurities and cubic structure) were plotted against the reciprocal of the absolute temperature (graph 3). A straight line drawn through the points had the equation, $\log p = 11.17 - \frac{21000}{T}$. A line with a slight curvature seemed to fit the data better than a straight line. A ΔH_{1190} value of 94.80 kcal/mole was determined from the former curve. Using this value in conjunction with the $\Delta C_p = -14$ e.u., which Brewer[5] used to fit a curve to Simpson's[3,4] measurements of the vapor pressure of PuF_3, enabled one to calculate $\Delta H_o = 111.47$ kcal/mole. A curve based on a $\Delta C_p = -14$ e.u., fit the data fairly well.

When the vapor pressure data for run No. 2 were plotted against the reciprocal of the absolute temperature (graph 4), a straight line of the equation, $\log p = 10.89 - \frac{20030}{T}$ fit the data very well. A ΔH_o value 108.69 kcal/mole was calculated using $\Delta H_{1235} = 91.41$ kcal/mole from the graph and assuming $\Delta C_p = -14$ e.u. A curve based on these values was

within the experimental determination of the points.

A plot was made of $\Delta F/T + \Delta C_p \ln T$ against the reciprocal of the absolute temperature using a value of -14 e.u. for ΔC_p, and a straight line was drawn through the points.[7] A ΔH_o of sublimation of 109.4 kcal/mole was calculated from the slope of this line. The free energy of sublimation equation was:

$$\Delta F = 109{,}400 - 2.3(-14)T \log T - 151.1 \cdot T.$$

A melting point of 1660 degrees K was estimated from other fluoride compounds and using a heat of fusion of 13 kcal/mole and ΔC_p for the liquid of -16 e.u., as Brewer did for PuF_3, a ΔH_o of vaporization of 99.7 kcal/mole was calculated. They were also used, along with the free energy of sublimation equation, to obtain the free energy of vaporization equation: $\Delta F = 99{,}700 - 2.3(-16)T \log T - 160.1\ T$. From this equation the boiling point was found to be 3240 degrees K.

The measurements made after reloading the vessel in run No. 2 started out with an unusually high vapor pressure and gradually decreased until they settled on a line parallel to, but slightly higher than, the line obtained in the first part of run No. 2. The high values and dropping off would be logical if some of the AmF_3 were spilled on the outside of the effusion vessel during the reloading. The higher final values may have resulted from interchanging the thermocouple leads.

The vapor pressure values for AmF_3 determined in these experiments were somewhat below the values obtained by Simpson[3,4] for PuF_3. The difference in ionic radius between Pu^{+3} and Am^{+3} would lead one to expect that AmF_3 would be somewhat more volatile than PuF_3. The free energy of

vaporization equation and boiling point obtained from it, lead to an entropy of vaporization at the boiling point which is lower than the value expected from Trouton's Rule. There is no obvious explanation for these differences.

VI. ACKNOWLEDGMENTS

The author desires to express his sincere appreciation of the guidance offered by Dr. B. B. Cunningham throughout this work. Recognition is also due to Mr. John Conway for spectrographic analysis and to Mrs. Helena Rubin for x-ray crystallographic analysis of the material used in the experiments.

This work was performed under the auspices of the Atomic Energy Commission.

VII. BIBLIOGRAPHY

1. B. B. Cunningham, "Microchemical Methods Used in Nuclear Research," Nucleonics, November, 1949, pp 62-85.

2. A. Ghiorso, B. Weissbourd, and H. P. Robinson, National Nuclear Energy Series, Plutonium Project Record, "The Transuranium Elements: Research Papers," Vol. 14B, Paper No. 16.8 (McGraw-Hill Book Co., Inc., New York, 1949).

3. T. E. Phipps, R. L. Seifert, O. C. Simpson, Metallurgical Laboratory Report CN-5223, "Vapor Pressure Measurements on Plutonium Metal and Plutonium Compounds," pp 9-19 (September 26, 1945).

4. T. E. Phipps, G. W. Sears, R. L. Seifert, and O. C. Simpson, National Nuclear Energy Series, Plutonium Project Record, "The Transuranium Elements: Research Papers," Vol. 14B, Paper No. 6.1a (McGraw-Hill Book Co., Inc., New York, 1949).

5. L. Brewer, L. Bromley, P. W. Gilles, and N. L. Lofgren, National Nuclear Energy Series, Plutonium Project Record, "The Transuranium Elements: Research Papers," Vol. 14B, Paper No. 6.40 (McGraw-Hill Book Co., Inc., New York, 1949).

6. D. G. Harvey, private communication to B. B. Cunningham, June, 1951.

7. K. K. Kelley, Bureau of Mines Bulletin 383 (United States Government Printing Office, Washington, 1935).