UCRL 1484 REV
CY 2

UNIVERSITY OF CALIFORNIA

Radiation Laboratory

TWO-WEEK LOAN COPY

This is a Library Circulating Copy
which may be borrowed for two weeks.
For a personal retention copy, call
Tech. Info. Division, Ext. 5545

BERKELEY, CALIFORNIA

UCRL-1484
Rev. c.2

DISCLAIMER

This document was prepared as an account of work sponsored by the United States Government. While this document is believed to contain correct information, neither the United States Government nor any agency thereof, nor the Regents of the University of California, nor any of their employees, makes any warranty, express or implied, or assumes any legal responsibility for the accuracy, completeness, or usefulness of any information, apparatus, product, or process disclosed, or represents that its use would not infringe privately owned rights. Reference herein to any specific commercial product, process, or service by its trade name, trademark, manufacturer, or otherwise, does not necessarily constitute or imply its endorsement, recommendation, or favoring by the United States Government or any agency thereof, or the Regents of the University of California. The views and opinions of authors expressed herein do not necessarily state or reflect those of the United States Government or any agency thereof or the Regents of the University of California.

36-INCH CYCLOTRON PHASE SERVO CONTROL SYSTEM

Bob H. Smith

March, 1955

TABLE OF CONTENTS

INTRODUCTION

PHASE SERVO CONTROL SYSTEM COMPLETE BLOCK DIAGRAM (Fig. 1)

FRONT VIEW OF RACK (Fig. 2a)

REAR VIEW OF RACK (Fig. 2b)

DESCRIPTION OF SYSTEM

FREQUENCY CONVERTER
- Theory of Frequency Conversion
- Superimposing 2 waves of different frequencies (Fig. 3)
- Vector Representation of Addition of 2 Waves of Different Frequencies (Fig. 4)
- Operating Principles
- Basis Circuit (Fig. 5)

PHASE METER AUDIO PRE-AMPLIFIER

PHASE METER
- Basic Circuit (Fig. 7)
- Angles Other than 120°

SERVO CONTROL AMPLIFIER
- Operating Principles
- Basic Circuit (Fig. 10)
- Relay Network (Fig. 11)
- Automatic Operation
- Manual Operation
- Dynamic Braking

PHASE METER ALIGNMENT

APPENDIX
- Schematics and Parts List (Fig. 13 - 17)

36-INCH CYCLOTRON PHASE SERVO CONTROL SYSTEM

Bob H. Smith

Radiation Laboratory, Department of Physics
University of California, Berkeley, California

INTRODUCTION

The Servo Phase Control System was developed to fulfill the need for automatically controlling the phase relationship of the accelerating voltages on the "dees" of the 36-inch cyclotron. Without this system the phases must be adjusted laboriously by hand. This is a very slow process and one which requires continual adjustment eg., if a probe is inserted. After obtaining the proper phase, it will detune the circuit and alter the phase relationships. This is all compensated for automatically by the servo control system. The phase angle generally desired is 120° but other angles within a $\pm 30^{\circ}$ may be obtained and automatically controlled. If a manual control of phase angle is desired it also may be obtained. Metering points are provided throughout the system.

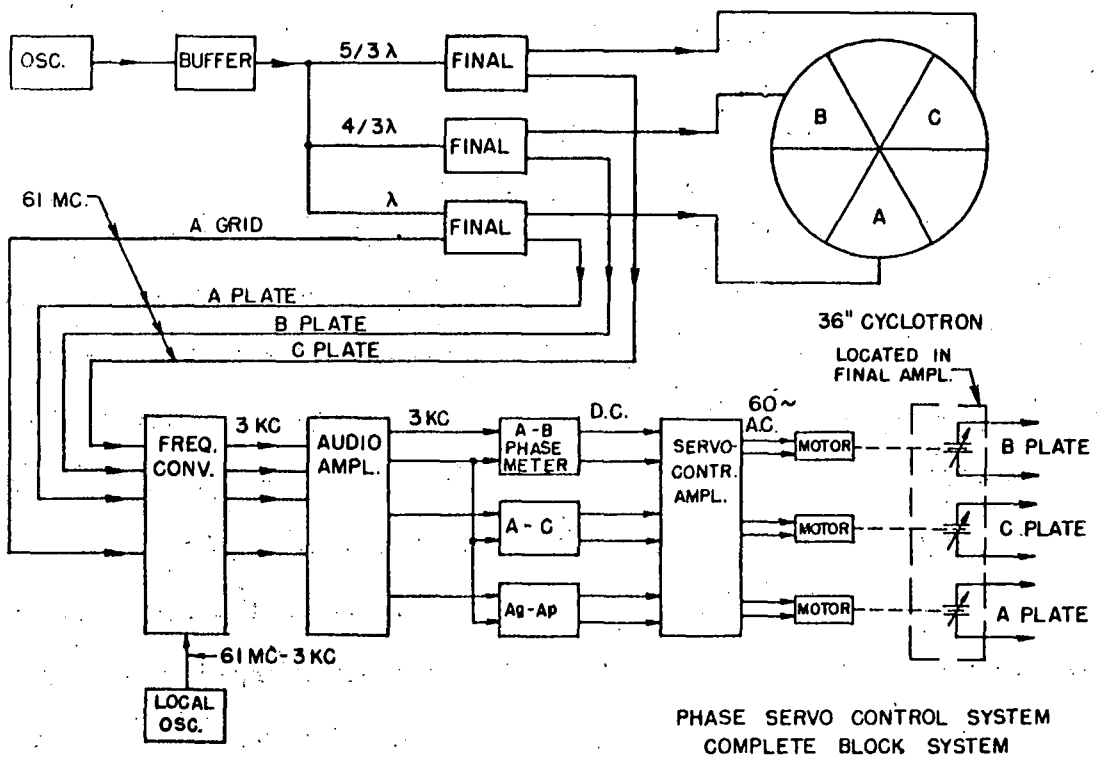

PHASE SERVO CONTROL SYSTEM
COMPLETE BLOCK SYSTEM
FIG. 1

MU 257

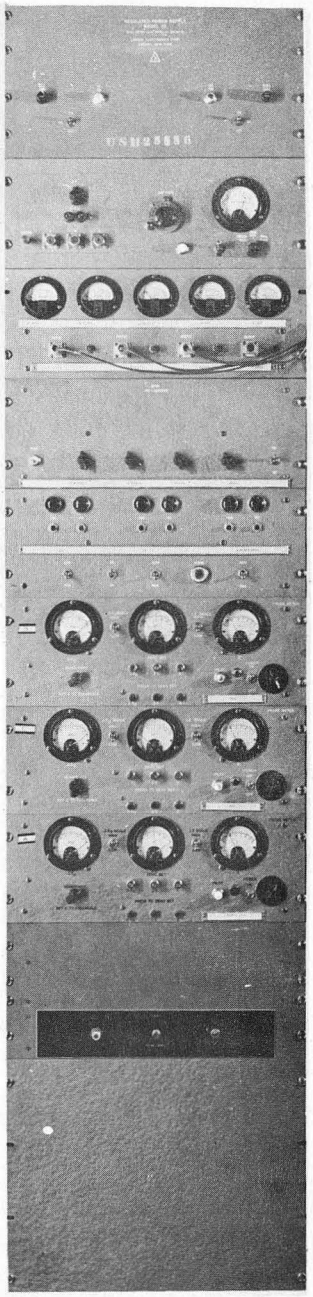

ZN-1227

Fig. 2a

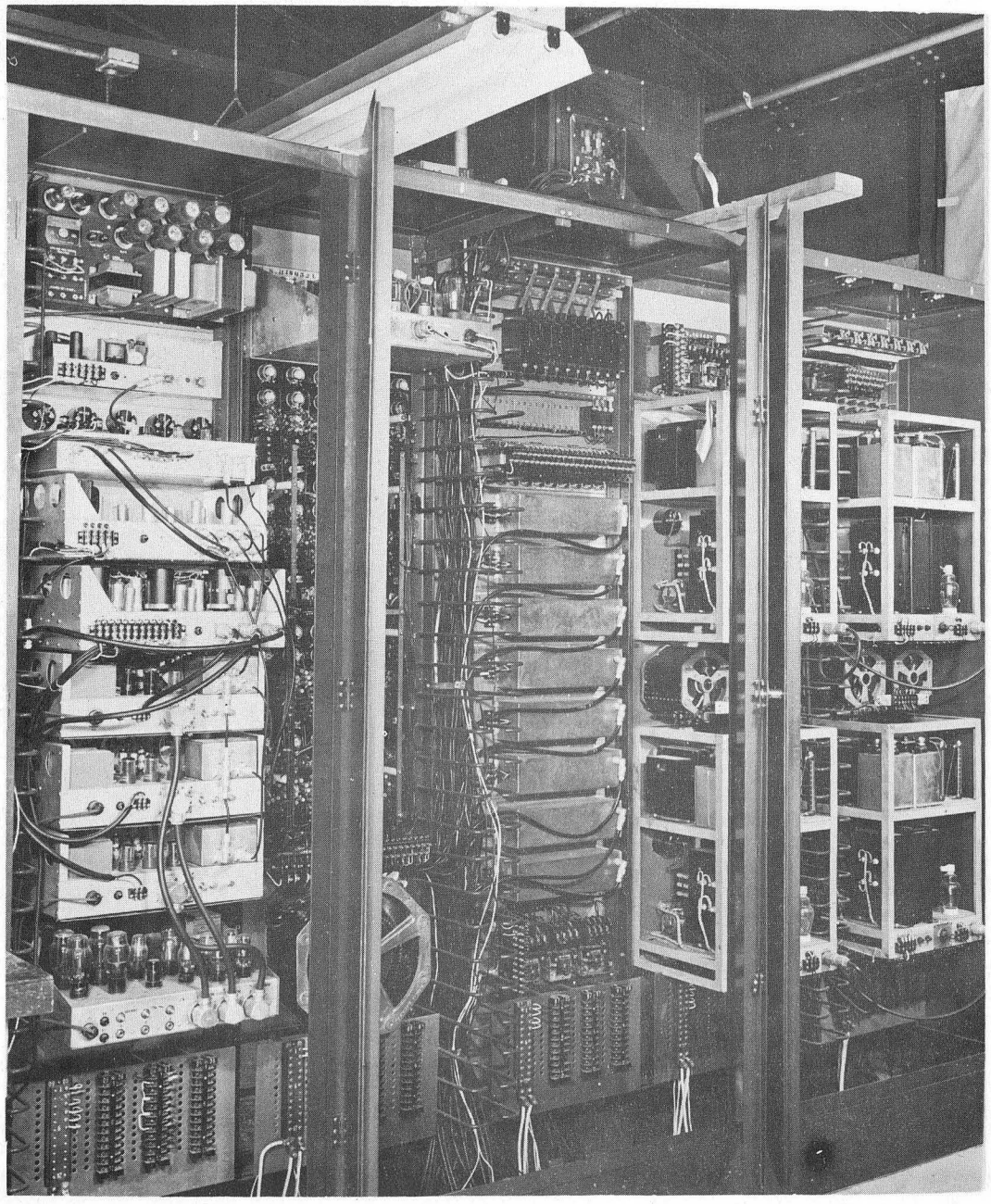

ZN-1226

Fig. 2b

DESCRIPTION OF SYSTEM

The servo system consists of a frequency converter, a local oscillator, an audio pre-amplifier, 3 phase meters, a D.C. amplifier, 3 servo motors and 3 variable capacitors. A block diagram of these components, with their relationship to the final amplifier and the electron cyclotron, is shown in Fig. 1.

In general, the function of this system is to control the relative phase differences of the three voltages applied to the cyclotron. This phase difference must be controllable to within ± 5 electrical degrees. This is accomplished by changing the value of variable capacitors connected across the plate tank circuit of the output tubes, of each phase of the 3 phase final amplifier. The capacitors are varied automatically by the servo motors to which they are mechanically connected. In brief, the manner, in which the control voltages for the servo-motors are obtained, is as follows:

The frequency of the final amplifier is first translated to 3KC, as measurements and design of equipment to operate at this frequency are less critical. Part of the output of each phase of the final amplifier is tapped off and fed into the frequency converter. The grid input signal of the final amplifier of "A" phase only, also is fed into the frequency converter. These signals are mixed with a signal for the local oscillator. The frequency of this signal is 3 KC less than that from the final amplifier. As will be shown later, the outputs from the converter each has a frequency of 3 KC and has an amplitude equal to the amplitude of the local oscillator input. These amplitudes must be equal or the phase meters will not function properly. The relationships are not affected by the translation to 3 KC.

The outputs of the converter are fed into an audio amplifier which serves as a pre-amplifier for the phase meters. The amplitude of the input to the phase meter may be varied by varying the gain of the pre-amplifier.

The signal from the plate of the AØ final amplifier, Ap is compared with the signals from the BØ final amplifier, Bp, the CØ final amplifier, Cp, and from the grid of AØ final in the A-B, A-C, and Ag-Ap Phase Meters respectively. If the phase difference in any one of these meters is within $\pm 5^{\circ}$ of the desired value, the two outputs from the phase meter will be approximately equal. If the deviation is greater than $\pm 5^{\circ}$, the two inputs will differ by an amount proportional to the angle of deviation.

These two signals are fed into one channel of the Servo Control Amplifier. The difference between these inputs is amplified and is used to operate two relays controlling the direction of rotation of the servo motor. Whenever the phase deviation exceeds $\pm 5^{\circ}$, power is supplied to the motor which turns a variable capacitor correcting the deviation.

THEORY OF FREQUENCY CONVERSION (SUPERPOSITION METHOD)

When two alternating voltages of different frequencies are superimposed, the result is as shown in Fig. 3. The two waves alternately add and subtract as the higher frequency wave continuously advances in relative phase because of its greater angular velocity. The resulting envelope accordingly goes through one cycle of amplitude variation in a time interval corresponding to the time required for the higher frequency wave to gain a cycle. Thus, the envelope pulsates at a frequency that is the difference between the frequencies of the two alternating waves involved. The equation of the envelope is:

$$E = \sqrt{E_1^{\,2} + E_2^{\,2} + 2E_1E_2 \cos(\omega_1 - \omega_2)t} \qquad \text{Eq. 1}$$

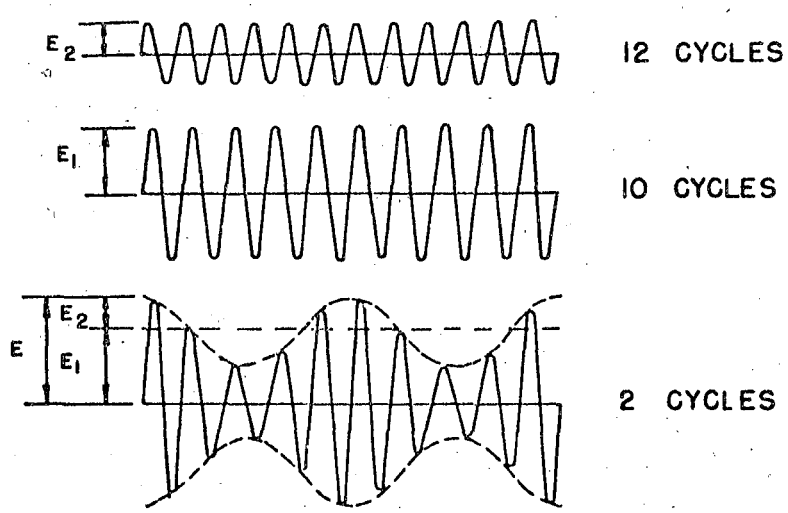

FIG. 3. SUPERIMPOSING 2 WAVES OF DIFFERENT FREQUENCIES

MU 2571

Where E_1 and E_2 are the amplitudes of the two a-c waves being superimposed, and $\omega_1/2\pi$ and $\omega_2/2\pi$ are their respective frequencies. When one wave is much smaller than the other, i.e., $E_1 >> E_2$, then Eq. 1 may be simplified to:

$$E = E_1 \left[1 + \frac{E_2}{E_1} \cos(\omega_1 - \omega_2) t \right] \qquad \text{Eq. 2}$$

Under these conditions the instantaneous envelope amplitude varies in accordance with the amplitude of the smaller wave E_2. Rectification of the combined wave will produce an output which is modulated exactly as is E_2, but which has a carrier frequency equal to the difference between the carrier frequencies of the waves originally combined.* Any frequency modulation possessed by E_2 likewise appears as an identical frequency modulation of the new carrier frequency. It is to be noted that even phase relationships are maintained, a certain phase difference, ϕ, existing before frequency conversion still being present as the same phase shift, ϕ, after the frequency change.

FREQUENCY CONVERTER OPERATING PRINCIPLES

As may be seen from schematic 6W1843, each of the inputs is combined with the signal from the local oscillator. The inputs are chosen so as to be at least ten times the amplitude of the local oscillator. As shown above each output will then be equal in amplitude to the amplitude of the local oscillator signal, and each will have the same difference frequency of 3 KC. Therefore all of the outputs will be equal both in amplitude and frequency, but the phase differences will remain the same as in the finals.

* When neither of the two waves being superimposed is small compared with the other, so that Eq. 1 applies, then the alternating component of the rectified output will be exactly proportional to E_2 only if a square-law detector is employed. Linear detection under these conditions does not give an output porportional to E_2. Where Eq. 2 applies, either linear or square law detection may be employed.

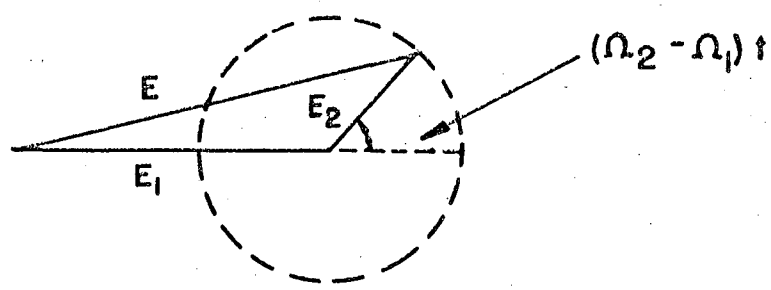

FIG. 4 VECTOR REPRESENTATION OF ADDITION OF TWO WAVES OF DIFFERENT FREQUENCIES

MU 2572

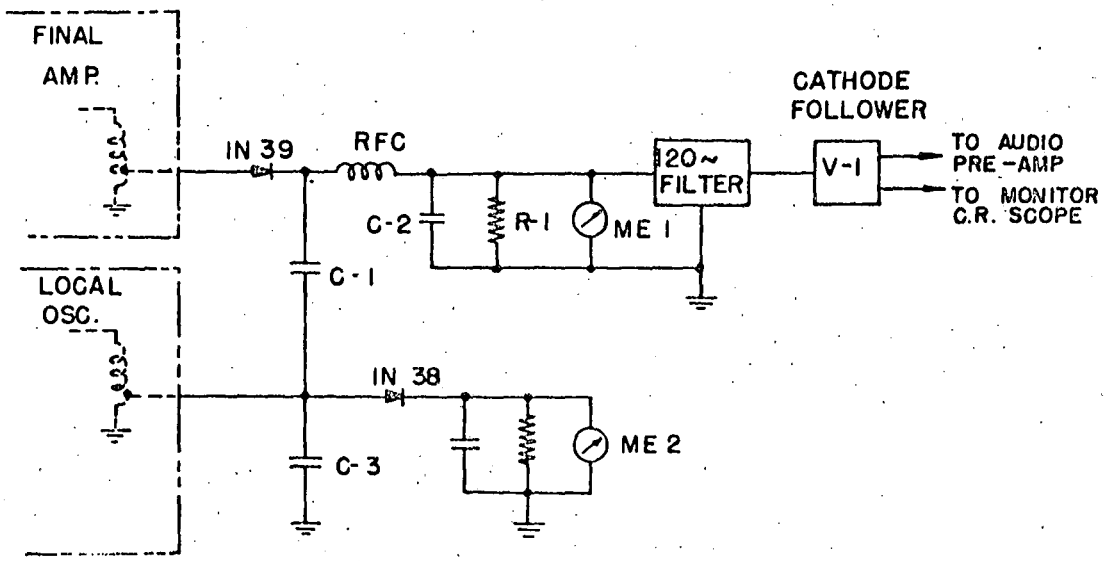

FIG. 5 BASIC FREQUENCY CONVERTOR CIRCUIT

MU2573

The method by which these frequencies are superimposed may be seen from the basic circuit Fig. 5.

The RFC appears as an open circuit to both the 61MC from the finals and the 60.997MC from the local oscillator. These are by-passed to ground by C-1 and C-3. The 3KC beat frequency, however, will pass the RFC. A voltage to ground is developed across the R_1-C_2 circuit.

This is the voltage that ME-1 will measure (ME-2 measures the magnitude of the input from the local oscillator). The 3KC signal then passes through the 120 cycle filter consisting of a parallel "T" network which gives a very narrow elimination band.

V-1 is used as a cathode follower to provide a more suitable impedance for driving the coaxial line.

PHASE METER AUDIO PRE-AMPLIFIER

This unit consists of four identical channels. Each channel contains a two-state, R-C coupled amplifier with 98 percent negative feed back. It has a very good frequency response, being down 1DB at 25 cy and 300KC and consequently negligible phase shift at the frequency of operation. The first stage uses a 6AU6 while the second uses $\frac{1}{2}$ of a 12AU7. The maximum gain of the amplifier is 34.DB.

PHASE METER

Operating Principles.

The operating principles of the phase meter may be most easily shown by the vector diagram in Fig. 6. As the voltage at C should be 120° out of phase with that at A, let us assume that this is the case. Point B is any point at ground potential. Taking the potential of A above B as a reference,

the voltage BC will be 120° out of phase with a BA. Now BA = BC, as was shown in the discussion of the frequency converter. Since R-3 and R-4 are matched resistors, the voltage at point D will be halfway between A and C. Therefore CD = DA. From trigonometry $\angle CB = \angle DAB = 30^{\circ}$ and DB is therefore equal to $\frac{1}{2}$ BC or BA. ($BD/BC = \sin \angle DCB = \sin 30^{\circ} = 0.5$) If one applies $\frac{1}{2}$ the voltage from C to ground to one side of the meter, ME-1, and the voltage from point D to ground to the other side, the meter should read zero if the $\angle CBA$ is 120°. If $\angle CBA$ is more than 120° there will be a positive reading on the meter; if it is less the reading will be negative. If a differential meter is used, it will give a direct reading of any deviation in phase from 120°.

The manner in which the foregoing is accomplished may be seen by referring to the basic phase meter circuit, Fig. 7. Two signals from the audio amplifier are applied to phase meter. If the phase meter is to measure the angle between AØ to BØ then these two signals will originate at A plate and B plate. Similarly for AØ to CØ, the signals will originate at A plate and C plate; for A grid to A plate, the signals will originate at A grid and A plate. The signals are applied to PG-1 and 2, and are rectified by V-4, 5 and 6. The gain is controlled by ganged helipots R-7, 13 and 32. One half the voltage from point C to ground is tapped off between the equal resistors R-9 and R-10 and, passing through V-1a is applied to ME-1. The potential from point D to ground is applied, through the gain control, to the opposite side of ME-1. If the phase is 120°, ME-1 will read zero and the output voltage to the servo control amplifier will be zero. If the phase is more than 120° the output from Terminal 3 of TS-1 will be less than from Terminal 2 while, if the phase is less than 120°, the output from Terminal 3 will be more than from 2. ME-2 is used to indicate any difference in amplitude between voltage BA and BC. ME-3 indicates the magnitude of voltage BC.

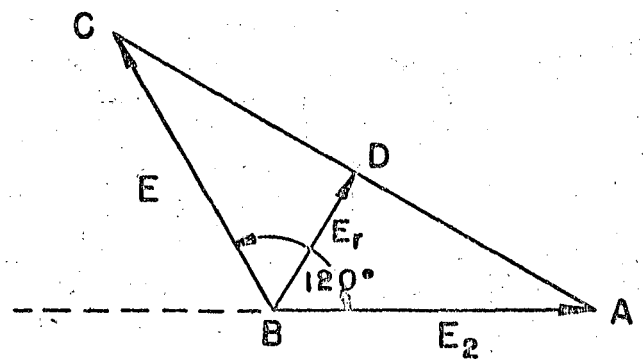

FIG. 6 VECTOR RELATIONSHIP FOR 120° PHASE ANGLE

MU2574

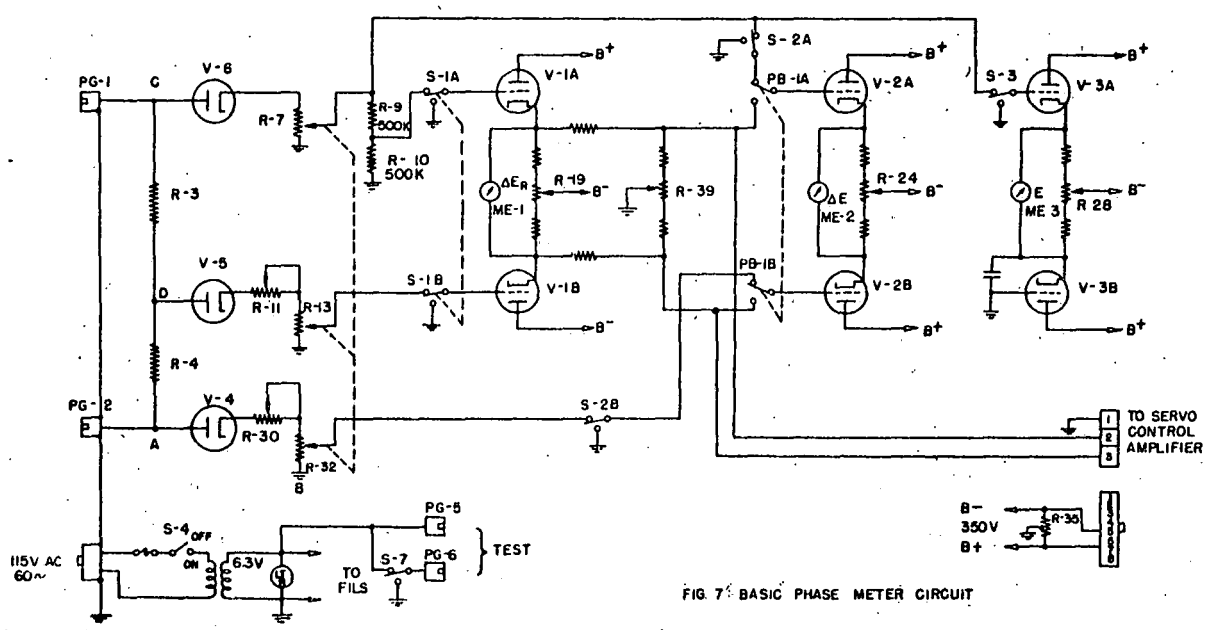

FIG. 7 BASIC PHASE METER CIRCUIT

MU 2575

ANGLES OTHER THAN 120°

If a phase angle other than 120° is desired, it may be obtained by balancing the output to the servo control amplifier with R-39. A variance of ± 30° or greater may be obtained in this manner.

The angle of variance may be determined by entering the reading of the ΔE_R meter on the graph of ΔE_R versus θ, Fig. 9, and reading the phase angle θ where θ is the variance in degrees from 120°. (See Fig. 8).

SERVO CONTROL AMPLIFIER - OPERATING PRINCIPLES

The function of the Servo Control Amplifier is to supply a.c. power to the servo motor such that it will run in a "forward" direction when the deviation from the required phase angle exceeds a +5° and in a "reverse" direction for a deviation greater than -5°. Between a +5° and a -5° no a.c. power is supplied to the motor. This is a static condition.

The magnitude of the voltage difference between the two inputs is dependent upon the phase angle deviation. The amplitude of the 60 cycle square-wave from the converter, Fig. 10, is equal to this voltage difference. If the two inputs are equal, the output from the converter will be a steady d-c value. Consenser C-1 blocks any d-c from the converter and also removes the d-c component contained in the square wave. The output of the converter is amplified by V-1 and V-2a and combined with the 60 cycle a.c. voltage from R-3. The combined voltage is amplified by V-2b and V-3, rectified and applied to the relay network.

The basis relay circuit is shown in Fig. 11. Note that a resistor, R-4, is added in series with RE-2 in the "Auto" position thus requiring a higher potential at point "A" to energize RE-2 than to energize RE-1. The voltage

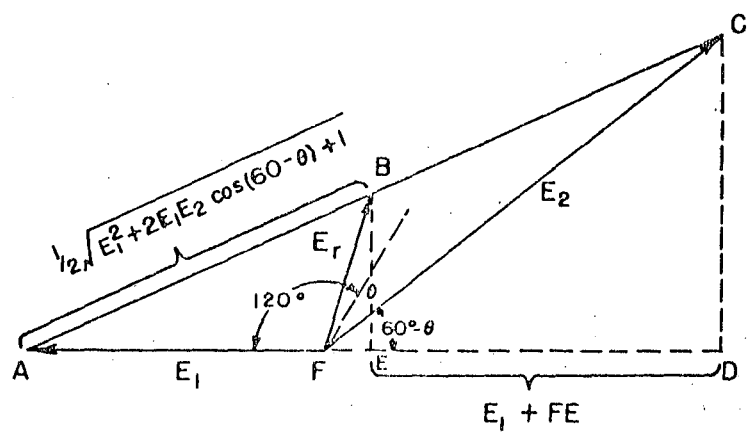

FIG. 8: VECTOR DIAGRAM FOR ANGLES GREATER THAN 120°

LET $\Delta E_r = \frac{E_r - E_1/2}{E_1}$ & $\Delta E = \frac{E_1 - E_2}{E_1}$

THEN $\Delta E_r = \sqrt{(1-\Delta E)\sin^2 \frac{1}{2}(60-\theta) + \frac{1}{4}\overline{\Delta E}^2} - \frac{1}{2}$ Eq. 3

THIS IS THE EQUATION USED IN PLOTTING THE GRAPH OF FIG. 9. ΔE_r vs. θ

MU 2576

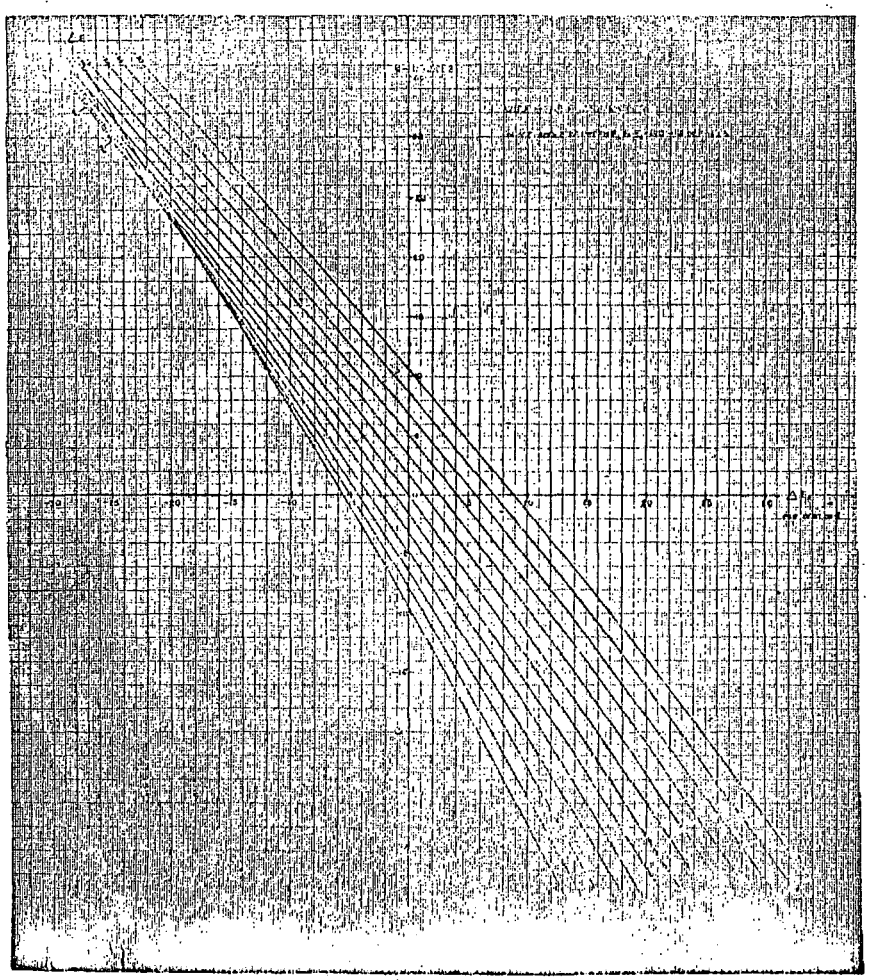

Fig. 9 MU 1587

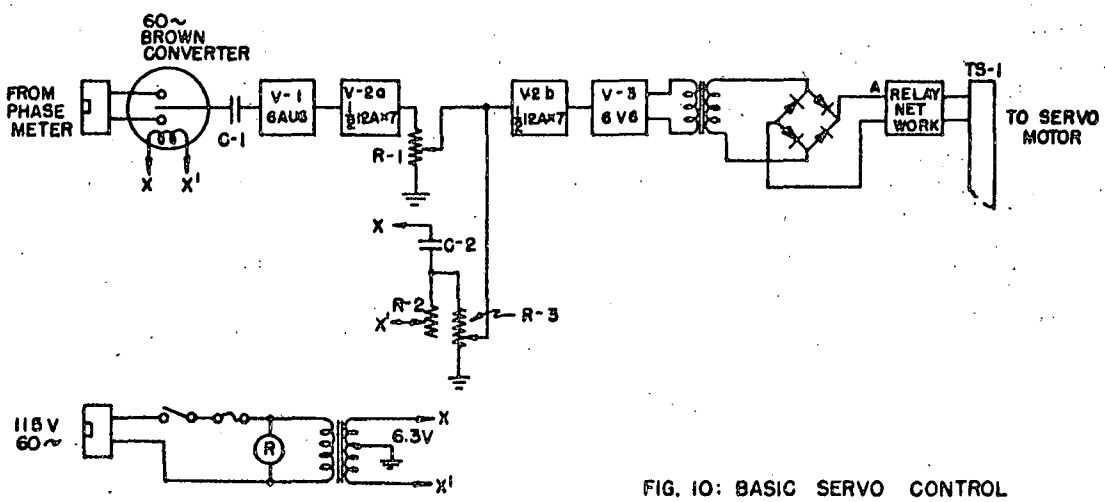

FIG. 10: BASIC SERVO CONTROL AMPLIFIER CIRCUIT

MU2577

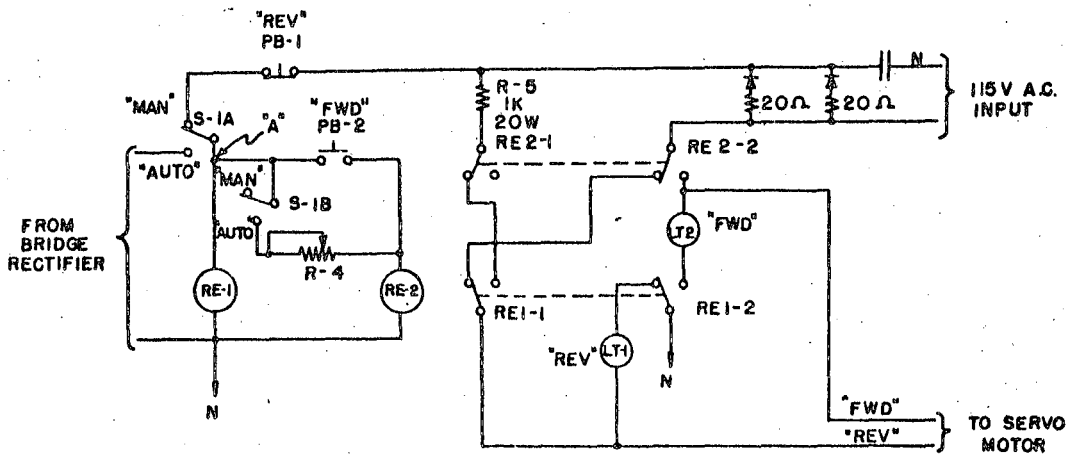

NOTES:

1. NETWORK SHOWN IN "MANUAL" POSITION.
2. ALL RELAY CONTACTS SHOWN IN NON-ENERGIZED POSITION.
3. FOR AUTOMATIC OPERATION PLACE S-1 IN "AUTO" POSITION.
4. FOR STATIC CONDITION, RE-1 IS ENERGIZED & RE-2 IS NOT ENERGIZED.
5. FOR FORWARD CONDITION, RE-1 IS ENERGIZED & RE-2 IS ENERGIZED.
6. FOR REVERSE CONDITION, RE-1 IS NOT ENERGIZED & RE-2 IS NOT ENERGIZED.

FIG. 11: SERVO CONTROL AMPLIFIER RELAY NETWORK

MU 2578

at "A" required to energize RE-1 is approximately 40 volts while 60 volts is required to energize RE-2. When RE-1 is energized and RE-2 is not energized, Fig. 11, the relay network is in the static condition and there is no a.c. power supplied to the servo motor. To allow the motor to run in a forward direction, both relays must be energized, to run in a reverse direction neither relay may be energized.

Similarly, LT-1 will light up when both relays are energized and LT-2 will light up when neither relay is energized. When only one relay is energized neither light will work.

The foregoing positions of the relay contacts for forward, reverse and statis conditions hold for "Automatic" as well as "Manual" operation.

AUTOMATIC OPERATION (See Fig. 12)

Case 1 More than $+5^{\circ}$ Deviation

The phase shifting network of C-2 and R-2 controls the phase of the a.c. input to R-3. R-2 is varied until the a.c. is in phase with the square wave. The imphase addition results in the magnitude of the combined wave being increased. R-3 is adjusted, with no output from V-2a, to give 50 volts at point "A". If the input from V-2a is sufficient to increase the potential of point "A" to 60 volts then both relays will be energized and the motor will run in a forward direction. The value of R-1 is adjusted so that RE-2 will be energized whenever the deviation is greater than plus 5°.

Case 2 More than -5° Deviation

The condition is identical with Case 1 with the exception that the square wave is 180° out of phase with the a.c. voltage of R-3. The magnitude of the combined wave is decreased and for any deviation greater than -5° the voltage at "A" will be less than 40 volts and neither relay will be energized. The

	CONVERTER OUTPUT	R-3 OUTPUT	COMBINED VOLTAGE	
CASE 1 $\theta < 120°$	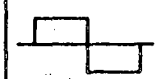	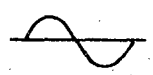	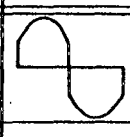	HIGH AVERAGE VALUE OF VOLTAGE BOTH RELAYS ENERGIZED MOTOR DIRECTION: FORWARD
CASE 2 $\theta > 120°$	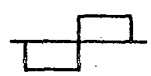	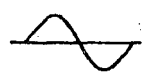	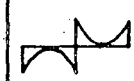	LOW AVERAGE VALUE OF VOLTAGE NEITHER RELAY ENERGIZED MOTOR DIRECTION: REVERSE
CASE 3 $\theta = 120°$		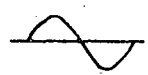	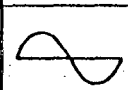	AVERAGE VALUE SUFFICIENT TO ENERGIZE RE-1 BUT NOT RE-2 MOTOR DIRECTION, NONE (STATIC CONDITION)

FIG. 12: ILLUSTRATING THE EFFECT UPON THE MOTOR OF COMBINING THE CONVERTER & R-3 OUTPUT VOLTAGES.

MU 2579

motor will, therefore, run in a reverse direction. If this does not occur at -5°, R-3 will have to be readjusted.

Case 3 Within $\mp 5^{\circ}$ Deviation

If the deviation is not more than $\mp 5^{\circ}$ the amplitude of the square wave is not great enough to either close RE-2 or to open RE-1 as the case may be.

This is the static condition and no a.c. power will be supplied to the servo motor.

Manual Operation

For the manual operation S-1 disconnects the amplifier from the relay network. Also R-4 is removed. The relays operate as previously described to supply power to the servo motor. In the static condition power flows through PB-1, to RE-1 to neutral thus energizing RE-1. RE-2 will not be energized as PB-2 is not closed. For these conditions there will be no power delivered to the servo motor. However if the "FWD" pushbutton, PB-2 is closed both relays will be energized and the motor will run in the forward direction. If the "REV" pushbutton, PB-1 is pushed it will open the circuit, de-energizing both relays and the motor will run in the reverse direction.

Dynamic Braking

To prevent the servo motor from overshooting the "dead zone" (the $\pm 5^{\circ}$ deviation within which the amplifier is in a static condition), dynamic braking is applied. It may be seen in Fig. 11 that, when the Servo Amplifier is in the static condition, R-5 supplied d-c power to the servo motor via the reverse lead. This voltage will set up a field resisting motion whenever the rotor is turned. As the amplifier is in the static condition within a $\pm 5^{\circ}$ deviation, the d-c voltage applied to the motor tends to stop the motor within these limits.

PHASE METER ALIGNMENT (See Fig. 7)

Step 1 Cathode Bias Adjustment

a. Turn Power on.
b. Wait 45 seconds to allow filaments to warm up.
c. Adjust R-35 until 7 volts appears on the cathodes of V-1, 2 and 3.

Step 2 Zero Adjustment

a. Place S-5 and S-6 in "High" position.
b. Press S-1 and adjust R-19 until ME-1 reads zero.
c. Press S-2 and adjust R-24 until ME-2 reads zero.
d. Repeat b and c with S-5 and S-6 in "Low" position.
e. Press S-3 and adjust R-28 until ME-3 reads zero.

When any of these switches are pressed the grids of the respective tube are grounded. Thereby insuring zero grid signal.

Step 3 Balancing Circuit to Nullify Effect of V-4, 5 and 6.

a. Turn Power Off
b. Connect test signal plugs PG-5 and 6 to input plugs PG-1 and 2 respectively.
c. Put ΔE_R and ΔE scales in high range position.
d. Turn power on and allow 45 seconds for filament to warm up.
e. Adjust R-30 until ΔE (ME-2) reads zero.
f. Ground PG-6 with S-7 (located at rear of chassis).
g. Adjust R-11 until ΔE_R (ME-1) reads zero.
h. Turn Power Off.
i. Remove test signal plugs.

Step 4 For Phase Differences Other than 120°

a. Accomplish steps 1 through 3.
b. Apply two signals to PG-1 and 2 with the desired amount of Phase difference.
c. Push PB-1 and adjust R-39 until ME-2 reads zero.

APPENDIX

SCHEMATICS AND PARTS LISTS

Fig. 13 Phase Servo Interpanel Connection Diagram.

Fig. 14 Phase Servo Control Frequency Converter.

Fig. 15 Phase Meter Audio Pre-amplifier and Parts List.

Fig. 16 Phase Meter 30 cps to 61 mc and Parts List.

Fig. 17 Servo Phase Control Amplifier and Parts List.

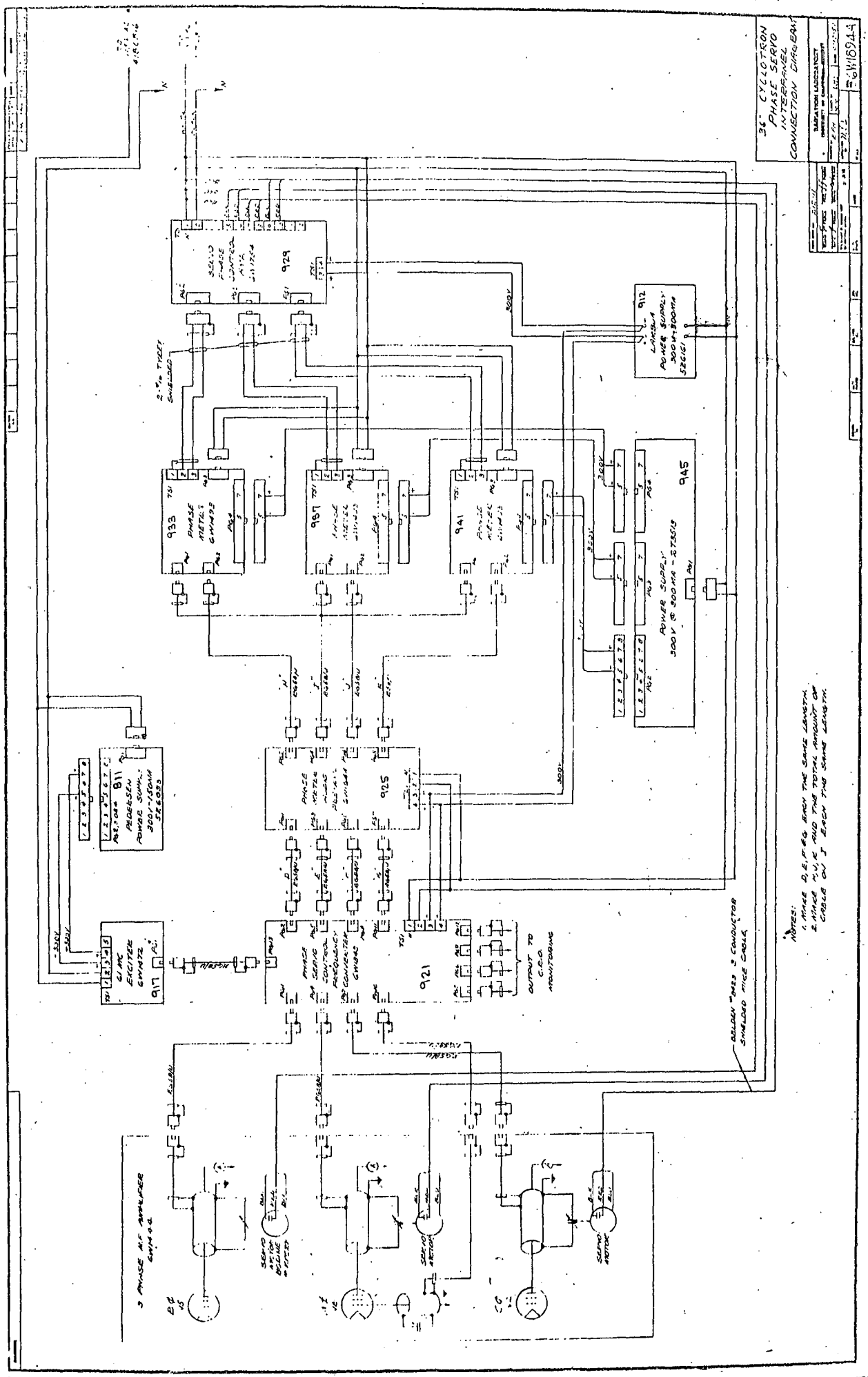
36" CYCLOTRON
PHASE SERVO
INTERPANEL
CONNECTION DIAGRAM
929
912
933
937
941
945
925
921
917
811
OUTPUT TO
C.R.O.
MONITORING
NOTES:

FIG. 13

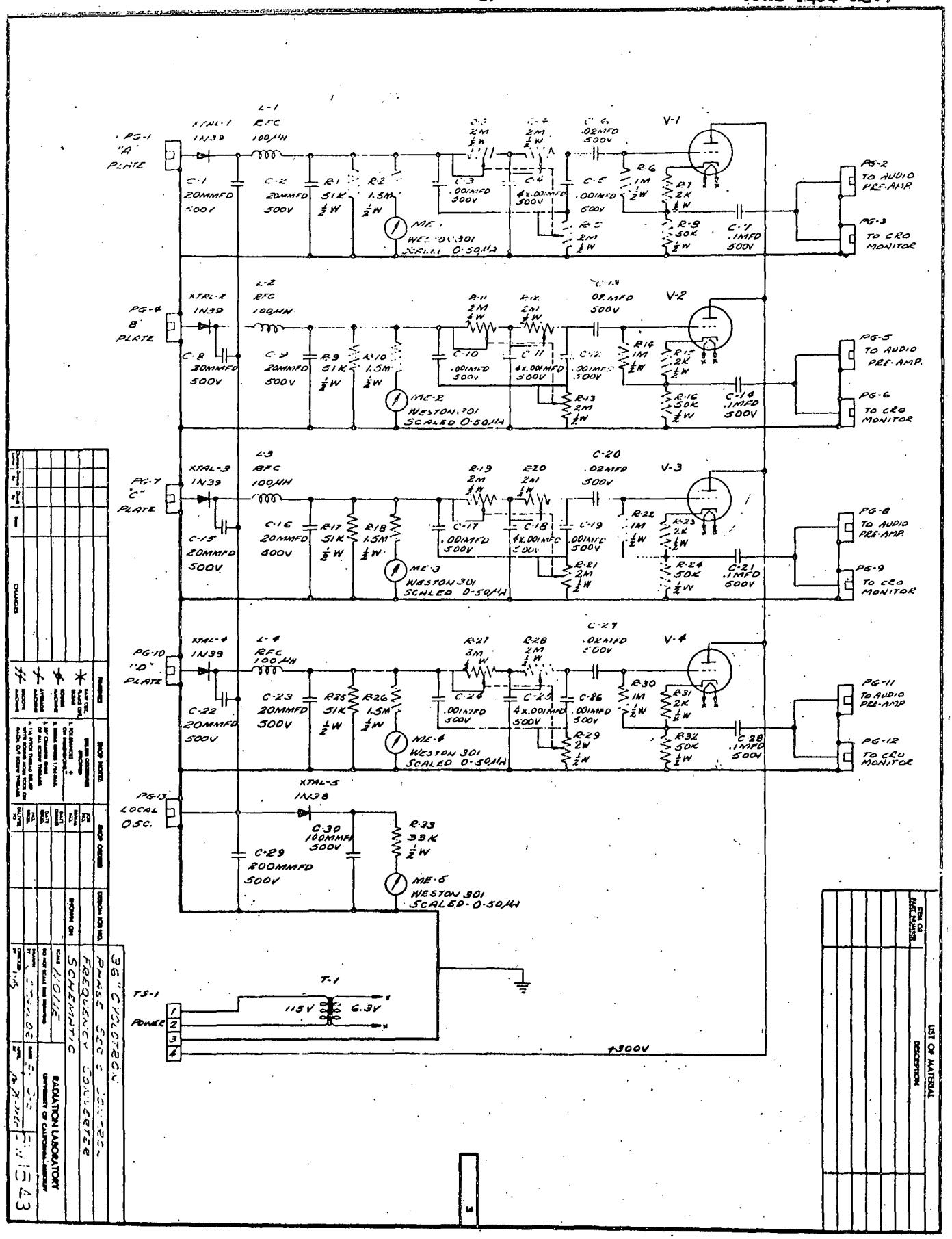
PS-1 "A" PLATE
XTAL-1 1N39
L-1 RFC 100μH
C-1 20MMFD 500V
C-2 20MMFD 500V
R-1 51K ½W
R-2 1.5M ½W
ME-1 WESTON 301 SCALED 0-50μA
C-3 .001MFD 500V
C-4 4x.001MFD 500V
C-5 .001MFD 500V
C-6 .02MFD 500V
V-1
R-6 1M ½W
R-7 2K ½W
R-8 50K ½W
C-7 .1MFD 500V
PG-2 TO AUDIO PRE-AMP.
PG-3 TO CRO MONITOR
PG-4 "B" PLATE
XTAL-2 1N39
L-2 RFC 100μH
C-8 20MMFD 500V
C-9 20MMFD 500V
R-9 51K ½W
R-10 1.5M ½W
ME-2 WESTON 301 SCALED 0-50μA
C-10 .001MFD 500V
C-11 4x.001MFD 500V
C-12 .001MFD 500V
C-13 .02MFD 500V
V-2
R-14 1M ½W
R-15 2K ½W
R-16 50K ½W
C-14 .1MFD 500V
PG-5 TO AUDIO PRE-AMP.
PG-6 TO CRO MONITOR
PG-7 "C" PLATE
XTAL-3 1N39
L-3 RFC 100μH
C-15 20MMFD 500V
C-16 20MMFD 500V
R-17 51K ½W
R-18 1.5M ½W
ME-3 WESTON 301 SCALED 0-50μA
C-17 .001MFD 500V
C-18 4x.001MFD 500V
C-19 .001MFD 500V
C-20 .02MFD 500V
V-3
R-22 1M ½W
R-23 2K ½W
R-24 50K ½W
C-21 .1MFD 500V
PG-8 TO AUDIO PRE-AMP.
PG-9 TO CRO MONITOR
PG-10 "D" PLATE
XTAL-4 1N39
L-4 RFC 100μH
C-22 20MMFD 500V
C-23 20MMFD 500V
R-25 51K ½W
R-26 1.5M ½W
ME-4 WESTON 301 SCALED 0-50μA
C-24 .001MFD 500V
C-25 4x.001MFD 500V
C-26 .001MFD 500V
C-27 .02MFD 500V
V-4
R-27 2M ½W
R-28 2M ½W
R-29 2W ½W
R-30 1M ½W
R-31 2K ½W
R-32 50K ½W
C-28 .1MFD 500V
PG-11 TO AUDIO PRE-AMP.
PG-12 TO CRO MONITOR
PG-13 LOCAL OSC.
XTAL-5 1N38
C-29 200MMFD 500V
C-30 100MMFD 500V
R-33 33K ½W
ME-5 WESTON 301 SCALED 0-50μA
TS-1 POWER
T-1
115V
6.3V
+300V
36" CYCLOTRON
PHASE SEC & CONVERTER
FREQUENCY CONVERTER
SCHEMATIC
RADIATION LABORATORY
UNIVERSITY OF CALIFORNIA
LIST OF MATERIAL
DESCRIPTION

FIG. 14

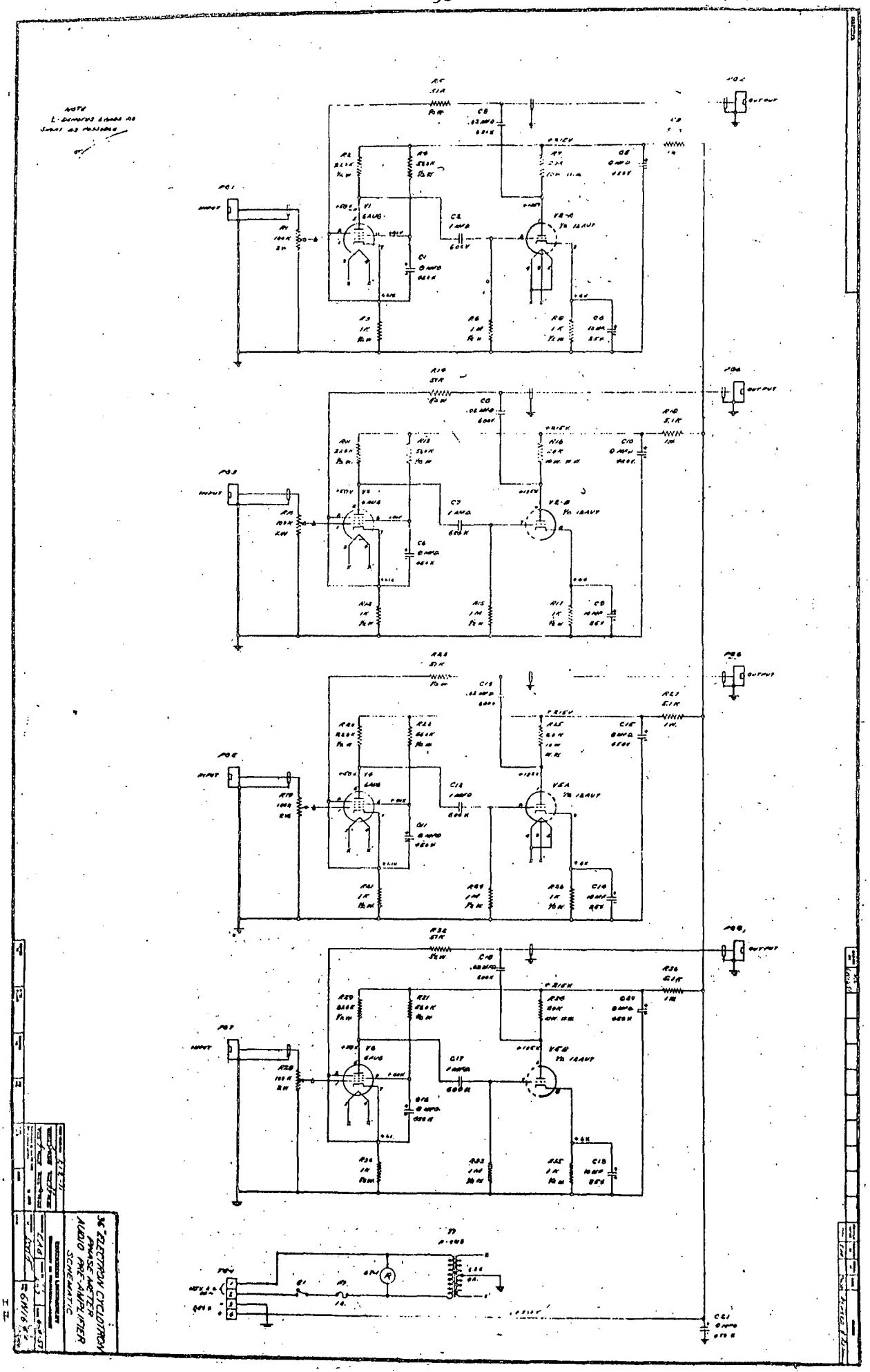

FIG. 15

OZ 1157

PARTS LIST FOR SCHEMATIC 6W1644

DESIG.	QUAN.	SPECIFICATION
C-1,5,6,10,11, 15,16,20,21	9	8 mfd 450 v Electrolytic Capacitor
C-2,7,12,17,	4	1 mfd 600 v Paper Capacitor
C-3,8,13,18	4	.02 mfd 600 v Paper Capacitor
C-4,9,14,19	4	10 mfd 25 v Electrolytic Capacitor
F-1	1	3 AG 1 Amp fuse w/Littelfuse #342001 post.
LT-1	1	115 v cand. base pilot lamp w/100S socket and red jewel
PG-1 thru 8	8	Amphenol 83-1R female receptacle
R-1,10,19,28	4	100 K ohms 2 W pot.
R-2,11,20,29	4	220 K " ½ W carbon resistor
R-3,8,12,17,21, 26,30,35	8	1 " " " " "
R-4,13,22,31	4	560 " " " " " "
R-5,14,23,32	4	51 " " " " " "
R-6,15,24,33	4	1 M " " " " "
R-7,16,25,34	4	20 K " 10 " wire wound resistor
R-9,18,27,36	4	5.1 " " 1 " carbon resistor
S-1	1	S.P.D.T. Toggle Switch Bud #1118
TS-1	1	Jones 142-4 Term. Strip
T-1	1	Stancor P-4019 Transf. 115/6.3V C.T. at 4A
V-1,3,4,5,	4	6AU6 Tubes
V-2,6	2	12AU7 Tubes
VS-1,3,4,5	4	Cinch 7 EM Tube Sockets
VS-2,6	2	Cinch 9 EM Tube Sockets

CHANGES	Date	Drawn by	Check by	Change Letter
Changes of Resistors				A

SAW CUT, FLAME CUT, SHEAR — ROUGH MACHINE — AVERAGE MACHINE — SMOOTH MACHINE

UNLESS OTHERWISE SPECIFIED: 1. TOLERANCES ON DIMENSIONS ± 2. BREAK EDGES 1/64 MAX. 3. 30° CHAMFER ENDS OF ALL SCREW THREADS 4. 1½ PITCH THREAD RELIEF WITH ROUND NOSE TOOL ON MACH. CUT SCREW THREADS

SCALE

DESIGN JOB NO. 212-11

DRAWN BY EAB — DATE 9-4-57

CHECK BY — DATE

APPR. BY — DATE 6/7/57

36" ELECTRON CYCLOTRON

PHASE METER AUDIO PRE-AMPLIFIER

PARTS LIST

RADIATION LABORATORY
UNIVERSITY OF CALIFORNIA
BERKELEY

6W 1651 A

Sheet one of two

SHOWN ON — JOB NO. — SER. NO. — DATE ISSUED — DATE REQ'D — NO. REQ'D — DELIVER TO — MATERIAL

FIG. 15a

PARTS LIST FOR SCHEMATIC 6W1644

DRAWING LIST

DWG NO.	NO. REQ'D	TITLE
6W1644		Schematic
6W1651		Parts List (this)
6W1663	1	Panel
6W1674	1	Chassis
10Z2973-1	1 pr.	Chassis Bracket
10Z3072-1	1 pr.	Chassis Bracket Brace
10Z3421-2	2	Bottom Clips
10Z4053-1	1	Calcane Bottom Cover

Change Letter	Drawn By	Check By	Date	CHANGES
A	FAB			

SAW CUT, FLAME CUT, SHEAR — ROUGH MACHINE — AVERAGE MACHINE — SMOOTH MACHINE

UNLESS OTHERWISE SPECIFIED
1. TOLERANCES ± ON DIMENSIONS
2. BREAK EDGES 1/64 MAX.
3. 30° CHAMFER ENDS OF ALL SCREW THREADS
4. 1½ PITCH THREAD RELIEF WITH ROUND NOSE TOOL ON MACH. CUT SCREW THREADS

SCALE

DESIGN JOB NO. 212-11

DRAWN BY FAB — DATE 9/4/57

CHECK BY

APPR. BY — DATE 6/7/57

36" ELECTRON CYCLOTRON

PHASE METER AUDIO PRE-AMPLIFIER

PARTS LIST

RADIATION LABORATORY
UNIVERSITY OF CALIFORNIA
BERKELEY

6W 1651A

SHOWN ON | JOB NO. | SER. NO. | DATE ISSUED | DATE REQ'D | NO. REQ'D | DELIVER TO | MATERIAL

Sheet two of two

FIG. 15b

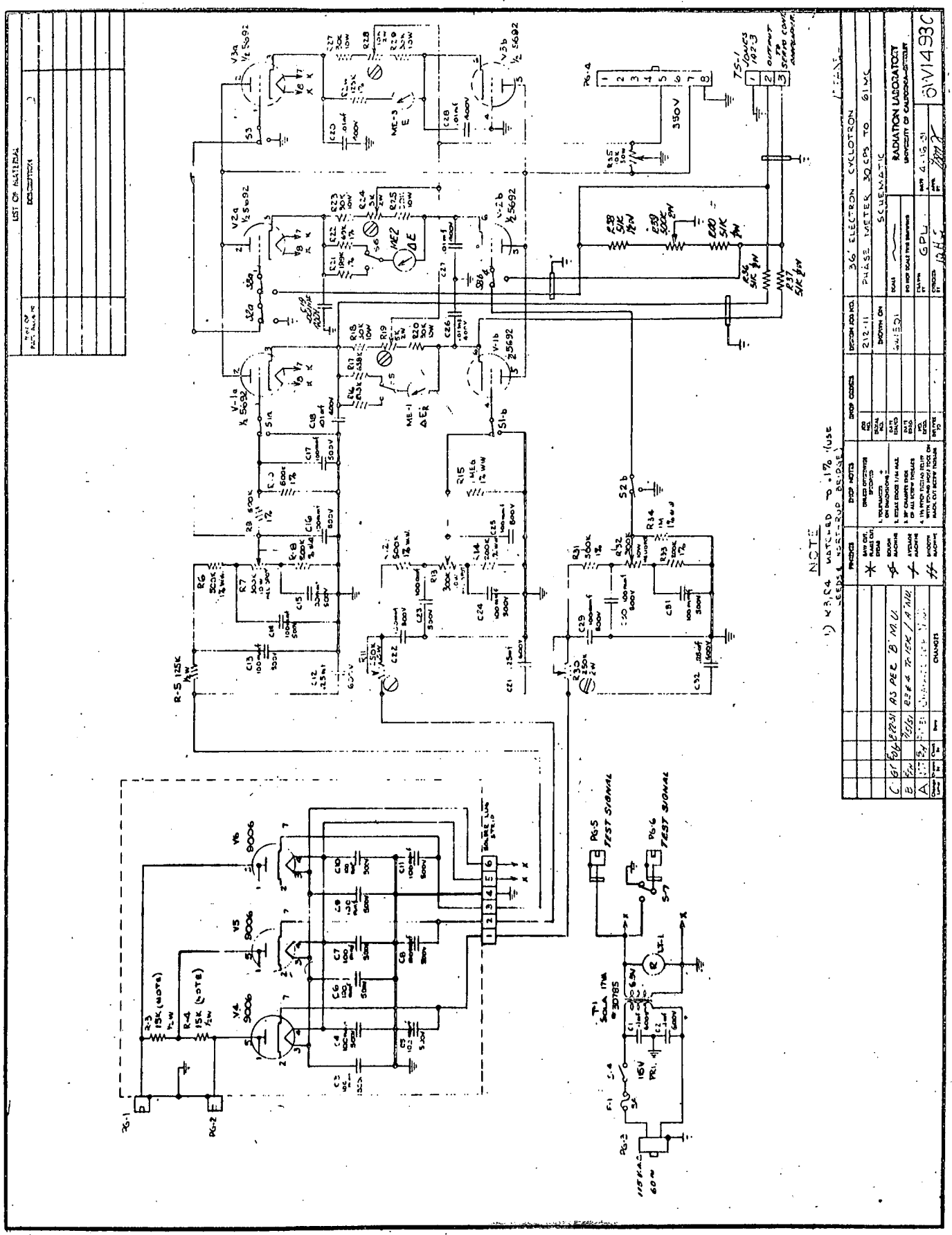
36" ELECTRON CYCLOTRON
PHASE METER 30 CPS TO 61 MC
SCHEMATIC
RADIATION LABORATORY
UNIVERSITY OF CALIFORNIA-BERKELEY
6W1493C
NOTE
1) R3,R4 MATCHED TO .1% (USE LEEDS & NORTHRUP BRIDGE)
TEST SIGNAL
TEST SIGNAL
350V
115 VAC 60~

FIG. 16

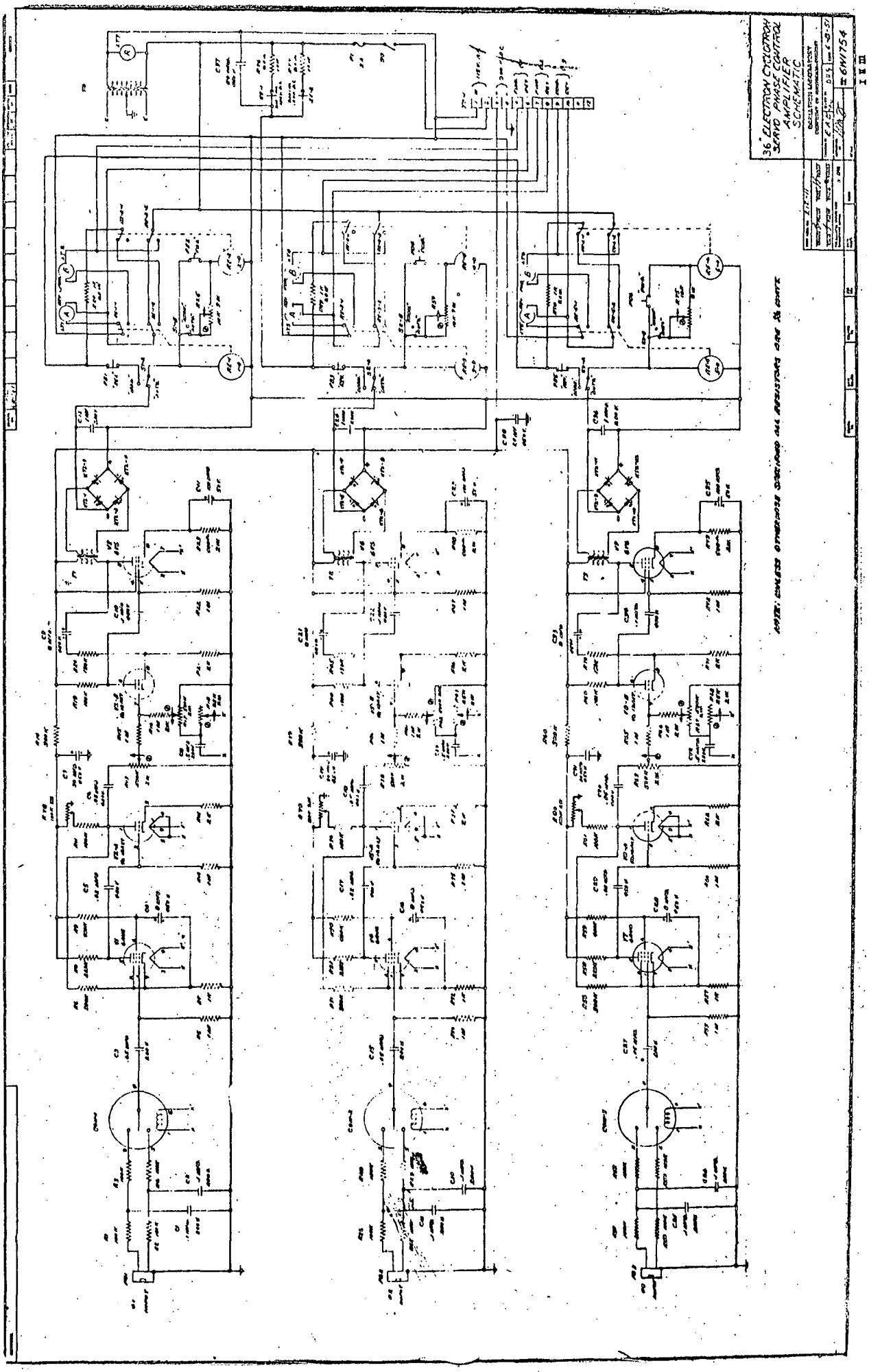
36" ELECTRON CYCLOTRON
SERVO PHASE CONTROL
AMPLIFIER
SCHEMATIC
NOTE: UNLESS OTHERWISE SPECIFIED ALL RESISTORS ARE 1% UNITS

FIG. 17