UCRL 150
cy 80/A

UNIVERSITY OF CALIFORNIA

Radiation Laboratory

For Reference

Not to be taken from this room

BERKELEY, CALIFORNIA

DISCLAIMER

This document was prepared as an account of work sponsored by the United States Government. While this document is believed to contain correct information, neither the United States Government nor any agency thereof, nor the Regents of the University of California, nor any of their employees, makes any warranty, express or implied, or assumes any legal responsibility for the accuracy, completeness, or usefulness of any information, apparatus, product, or process disclosed, or represents that its use would not infringe privately owned rights. Reference herein to any specific commercial product, process, or service by its trade name, trademark, manufacturer, or otherwise, does not necessarily constitute or imply its endorsement, recommendation, or favoring by the United States Government or any agency thereof, or the Regents of the University of California. The views and opinions of authors expressed herein do not necessarily state or reflect those of the United States Government or any agency thereof or the Regents of the University of California.

UNIVERSITY OF CALIFORNIA
RADIATION LABORATORY

Cover Sheet
Do not remove

INDEX NO. UCRL 150
This document contains 10 pages
and 7 plates of figures.
This is copy 80 of 97. Series A

DECLASSIFIED

Issued to: Info Div.

R ~~RESTRICTED~~
Classification

Each person who received this document must sign the cover sheet in the space below.

Route to	Noted by	Date	Route to	Noted by	Date
	R. K. Wakerling	8/12/48			

RESTRICTED

Physics-Instrumentation

DECLASSIFIED

UNIVERSITY OF CALIFORNIA

Radiation Laboratory

HIGH CURRENT HIGH VOLTAGE GAS DISCHARGE TUBE

By

W. R. Baker, Q. A. Kerns, Jack Reidel, R. F. Edwards

July 14, 1948

Berkeley, California

DECLASSIFIED

UCRL 150

PHYSICS-INSTRUMENTATION

STANDARD DISTRIBUTION: Series A	Copy Numbers
Argonne National Laboratory	1-8
Armed Forces Special Weapons Project	9
Atomic Energy Commission, Washington	10-11
Battelle Memorial Institute	12
Brookhaven National Laboratory	13-18
Carbide & Carbon Chemicals Corporation (K-25 Area)	19-22
Carbide & Carbon Chemicals Corporation (Y-12 Area)	23-26
Columbia University (Dunning)	27
Columbia University (Failla)	28
General Electric Company	29-32
Hanford Directed Operations	33-39
Iowa State College	40
Kellex Corporation	41-42
Los Alamos	43-45
Massachusetts Institute of Technology	46
Monsanto Chemical Company, Dayton	47-48
National Bureau of Standards	49-50
Naval Radiological Defense Laboratory	51
NEPA	52
New York Directed Operations	53-54
Oak Ridge National Laboratory	55-62
Patent Advisor	63
Technical Information Division, ORDO	64-78
UCLA Medical Research Laboratory (Warren)	79
University of California, Radiation Laboratory	
Information Division	80-82
Chemistry, Building 4	83
University of Rochester	84-85
Western Reserve University (Friedell)	86
Chicago Office of Directed Operations	87
Declassification Procedure	88-97

Information Division
Radiation Laboratory
Univ. of California
Berkeley, California

RESTRICTED

ABSTRACT

HIGH CURRENT HIGH VOLTAGE GAS DISCHARGE TUBE DECLASSIFIED

W. R. Baker, Q. A. Kerns, Jack Reidel, R. F. Edwards

July 14, 1948

This paper describes a high current, high voltage gas discharge tube developed at the Radiation Laboratory of the University of California under the auspices of the Atomic Energy Commission, for use on a high voltage pulse generator to drive the 184-inch Cyclotron Electric Deflector. The tube is continuously pumped and is filled with helium at 200 to 1000 microns pressure. An unorthodox arrangement of electrodes, in which the firing mechanism is outside the two main electrodes, results in a tube with the following performance; peak current, 100,000 amperes, plate voltage, variable from several hundred volts to 20 kv, time jitter of less than 0.005 μs, lead inductance, less than 0.005 μh, repetition rate, 180 pulses per second, pulse length 0.1 μs for above data, but longer at reduced currents, peak power, 1000 megawatts.

To be declassified for eventual publication.

Radiation Laboratory
University of California
Berkeley, California

RESTRICTED

DECLASSIFIED

UNIVERSITY OF CALIFORNIA, RADIATION LABORATORY

HIGH CURRENT HIGH VOLTAGE GAS DISCHARGE TUBE

W. R. Baker, Q. A. Kerns, Jack Reidel, R. F. Edwards

July 14, 1948

During development of a high voltage pulse generator to replace the unit now on the 184-inch cyclotron deflector[1], it became apparent that existing types of high current, high voltage switches would not meet the demands of the projected pulser. These demands are; peak current, 100,000 amperes, plate voltage, variable from 1,000 to 20,000 volts, rise time of current from zero to peak value, 0.05 μs, ability to withstand reversal of plate voltage within 0.1 μs of firing time, time jitter of less than 0.005 μs, lead inductance of less than 0.005 μh, and repetition rate of 180 pulses per second. These rigorous specifications, which include the switching of 1000 megawatts of peak power for 0.1 μs, have been satisfied by the development of a new type of gas discharge tube.

Historical

Before attempting the development of a new tube, all currently available types of switches were tested, but failed to meet the specifications because of one or more shortcomings. First efforts were directed towards the development of a spark gap, since there was little doubt that a spark gap would carry the current at the high voltage point, and minimum lead inductance could be expected with correct mechanical construction. Spark gaps were constructed that fired within the maximum allowable jitter time, using a strategically placed corona source of ions and a high over-voltage trigger. Difficulties in varying the gap voltage and , at the same time, success with the gas discharge tube caused

[1] High Voltage Pulser for 184-inch Cyclotron Electric Deflector. Kerns, Baker, Edwards & Farly. Rad. Lab. Physics. Instrumentation #95/

this phase of the work to be abandoned. Mercury switches, such as the ignitron and the mercury-iron-sponge cathode gap were tried and eliminated because of igniting jitter in the former, and lack of a variable voltage characteristic in the latter, in addition to the rapid variation of vapor pressure with temperature, a fundamental disadvantage of a mercury cathode.[2]

Hydrogen thyratrons appeared particularly promising because of their low time jitter and variable plate voltage characteristics. However, it was found that when the peak current rating of a typical 5C22 hydrogen thyratron was exceeded by a factor of ten or more sparking occurred at the cathode. In addition, the reversal of plate voltage within 0.1 μs resulted in voltage breakdown between grid and anode with consequent destruction of the glass seal between the two parts. Both these factors limited the usefulness of these tubes in this application.

The unorthodox arrangement of electrodes in the present tube was first tried Jan. 13, 1948 and development work has been proceeding rapidly since that date. Dr. David Sloan of the University of California contributed valuable advice on several problems encountered and is at present proceeding with the development of a high voltage sealed off version of the tube.

Tube Operation

The new tube combines some of the desirable features of a hydrogen thyratron; variable plate voltage and low time jitter with the high current, high voltage, and rugged mechanical construction of a spark gap, without the disintegration of the electrodes and noisy operation usually associated with spark gaps.

A full scale cross-section of the tube and a typical circuit are shown in Figure 1. In operation, the tube is filled with a light gas, usually helium, at from 200 to 1000 microns pressure, and an rf plasma is maintained

[2] Pulse Generators by Glascoe & Lebacqz, p. 335. MIT Rad. Lab. series no. 5.

in the lower part of the tube. When the tube is fired by applying a negative pulse to the grid-glow plate, some of the plasma is accelerated through the slots in the grid-cathode into the high field region between the anode and the grid-cathode, causing the gas in this part of the tube to ionize. The exact mechanism of this phenomena of breakdown is not as yet fully understood. Previous to the application of the trigger, the slots in the grid-cathode and the close spacing between the grid-cathode and the anode have prevented a sufficient quantity of the ionized gas from transferring into the high field region between the two main electrodes to cause a breakdown.

When the anode voltage is held at a low value for approximately 10 μs or longer the tube deionizes. However, when conducting in an oscillatory circuit the tube may pass current in both directions for several cycles as is the case in Fig. 3.

Anode Construction

Oxygen free copper has been found to be an acceptable anode material largely because of its superior electrical and thermal conductivity. An extremely small amount of anode material is removed during the tube discharge as is evidenced by tests to be described later. Heat generated by electron impact on the anode is removed by the water cooling tubing shown in Figure 1.

Grid-Cathode Construction

The grid-cathode is formed by cutting a square hole in the copper cathode and installing tungsten slats as shown in Figure 2. The optimum spacing of the slats was found to be approximately 1/16 inch. After many experiments with round holes and other shaped openings, slats with a ratio of spacing of slot width to slot depth of approximately one to five were found to give the most satisfactory operation. Tungsten seems to be a more acceptable slat material than copper. When the slats were made of tungsten, a tendency of the rf discharge to concentrate on spots and thereby cause pitting of the slats was lessened. The grid-cathode

structure is watercooled to remove the power lost in the rf plasma in the lower part of the tube and the heat generated by electron impact during periods of reverse current flow.

Insulator and Tube Spacings

The details of the anode, grid-cathode, and insulator construction and spacing are shown in Figure 2. All the spacings between the grid-cathode and the anode are much less than the mean free path of electrons in helium at pressures of 200 to 1000 microns of mercury. The anode grid-cathode spacing of 0.090 inch is as small as possible without risking ionization by field emission at anode voltages of 30 kv. This small spacing also insures a minimum of ions to clean up when the tube deionizes. Troublesome spots were formed on the inner surface of the insulator during the tube discharge and frequently caused chipping or cracking of the insulator until Dr. David Sloan of the University of California suggested the protective ring shown in Figure 2. This ring removes the insulator from the discharge area so effectively that lucite has been used as an insulator. However, the present insulator is of pyrex glass, a more trouble free material in this application. The vacuum seal around the glass ring insulator is obtained by the use of a rubber gasket at each end of the ring. Atmospheric pressure holds the tube together because of the internal vacuum, and no other clamping arrangement is necessary. Quick dismantling is thus enhanced for inspection and experimental changes.

Gas and Gas Pressure

Both hydrogen and helium have proven to be acceptable, although helium is used at present because of its longer mean free path and the removal of a fire hazard encountered with hydrogen. The gas pressure is adjusted by bleeding the helium in through a needle valve and continuously pumping the gas out with a vacuum pump. Pressure variations from 200 to 1000 microns[3] do not seriously

[3] This is the pressure as read on a type 501 Vacuum Thermocouple Gauge, manufactured by Vacuum Engineering Division, National Research Corp., Cambridge, Mass., uncorrected for helium.

hinder operation, but at pressures above 1000 microns the tube tends to stay ionized when fired, while below 200 microns pressure, difficulty is encountered in triggering the discharge.

Tube Firing Mechanism

Three methods of firing the tube have been successfully used during the progress of the tube's development. The system now in use involving an rf plasma and a fast trigger such as that shown in Figure 3, has proved to be best for a continuously pumped tube. An rf plasma is formed in the lower part of the tube by applying 300 megacycle power to the grid-glow plate. This frequency is necessary to minimize any variation in the plasma with time that would result in time jitter when triggering the tube. The delay between application of the trigger and the firing of the tube and the time jitter are functions of the trigger magnitude and wave shape. With a waveshape approximating that shown in Figure 3, the firing delay is reduced to a minimum of 0.05 μs as the trigger voltage is increased to 6 kv. The spacing of 3/8 inch between the top of the grid-glow plate and the bottom of the tungsten slats is critical, since pitting of the slats and triggering difficulties are encountered when this spacing is varied as little as plus or minus 1/8 inch. An indication of sufficient rf plasma is a steady leakage current flow from the grid-cathode to the anode of up to several milliamperes due to ions escaping through the slots into the high field region in insufficient quantities to cause breakdown.

Early experiments showed that a tungsten filament placed in the position of the present grid-glow plate and a low voltage trigger of as little as 300 volts, and waveshape similar to that in Figure 3, were outstandingly successful as a triggering system. This method was abandoned because of rapid deterioration of the filament due to impurities in the constantly changing gas and time jitter resulting from 60 cycle magnetic fields induced from the heating current. The use of dc heating current eliminated the jitter but the deterioration problem

still remained. There is considerable evidence to indicate that a tungsten filament or a unipotential oxide coated cathode will prove successful in a sealed version of the tube.

A triggering device utilizing field emission from needle points located in a position corresponding to the present grid-glow plate was the object of several experiments. The hope in this instance was that all filament power could be eliminated, the necessary ionization being generated with the trigger pulse. This method of triggering the discharge was abandoned because of the large time jitter, high trigger voltages necessary (5 to 15 kv), and excessive delay in firing the tube (several times that for the other two methods).

Cleaning of Tube Parts

Irregular operation and ease of triggering are apparently functions of the cleanliness of the tube parts and purity of the helium. Rigorous cleaning of the type employed in the vacuum tube industry results in higher operating voltages (up to 30 kilovolts) and greater ease of triggering.

Test Data

Typical wave shapes of plate current, plate voltage, and trigger voltage are shown in Figure 3. It will be noted that the tube does not deionize after the first plate current pulse because of the type of load. With such a high frequency, high Q load, oscillations develop that reverse the tube polarity before sufficient time has elapsed to allow the tube to deionize. Current pulses of up to 100 μs duration at reduced current levels seem to have no adverse effect on the tube. No exploratory experiments with pulses longer than 100 μs have been performed.

A fifty hour life test was conducted, under conditions comparable to those shown in Figure 3, on a tube slightly larger than the latest model (see Fig. 1). Operation was trouble free, and wear was concentrated on the anode (see Fig. 4), where some of the copper apparently left the anode and was deposited on the grid

slats. This effect was very slight (less than 0.001 inch of material was removed) and it appears that a life of from 500 to 1000 hours at high levels of operation can be anticipated.

These tests were conducted with a repetition rate of 120 pulses per second. When the tungsten filament was installed, repetition rates in excess of 1000 pulses per second were tried experimentally for a few minutes with no observable changes in the characteristics of the tube. No similar tests have been made with the rf plasma system of triggering because of circuit changes necessary in the power supply and trigger circuits to permit operation at these higher repetition rates.

Application to Higher Voltages

To determine the applicability of the principle of the tube at higher voltages, some tests were conducted on a small model tube made up of rubber and brass washers (see Fig. 5). The tube shown functioned very well with applied pulse plate voltages of up to 250 kv, having a duration of 2 μs. This assembly was operated under oil to prevent breakdown around the outside of the tube with these high voltages and small spacings. Recent experiments with other electrode arrangements indicate that a high voltage version of the tube is practical with dc as well as pulsed plate voltages.

In conclusion, it should be emphasized that the tube was developed for a very limited purpose, and no time was available for the working out of a detailed analysis of the operating characteristics or the application of the principle to sealed off tubes that are essential for large scale commercial usages.

LMB/7-30-48
Information Division

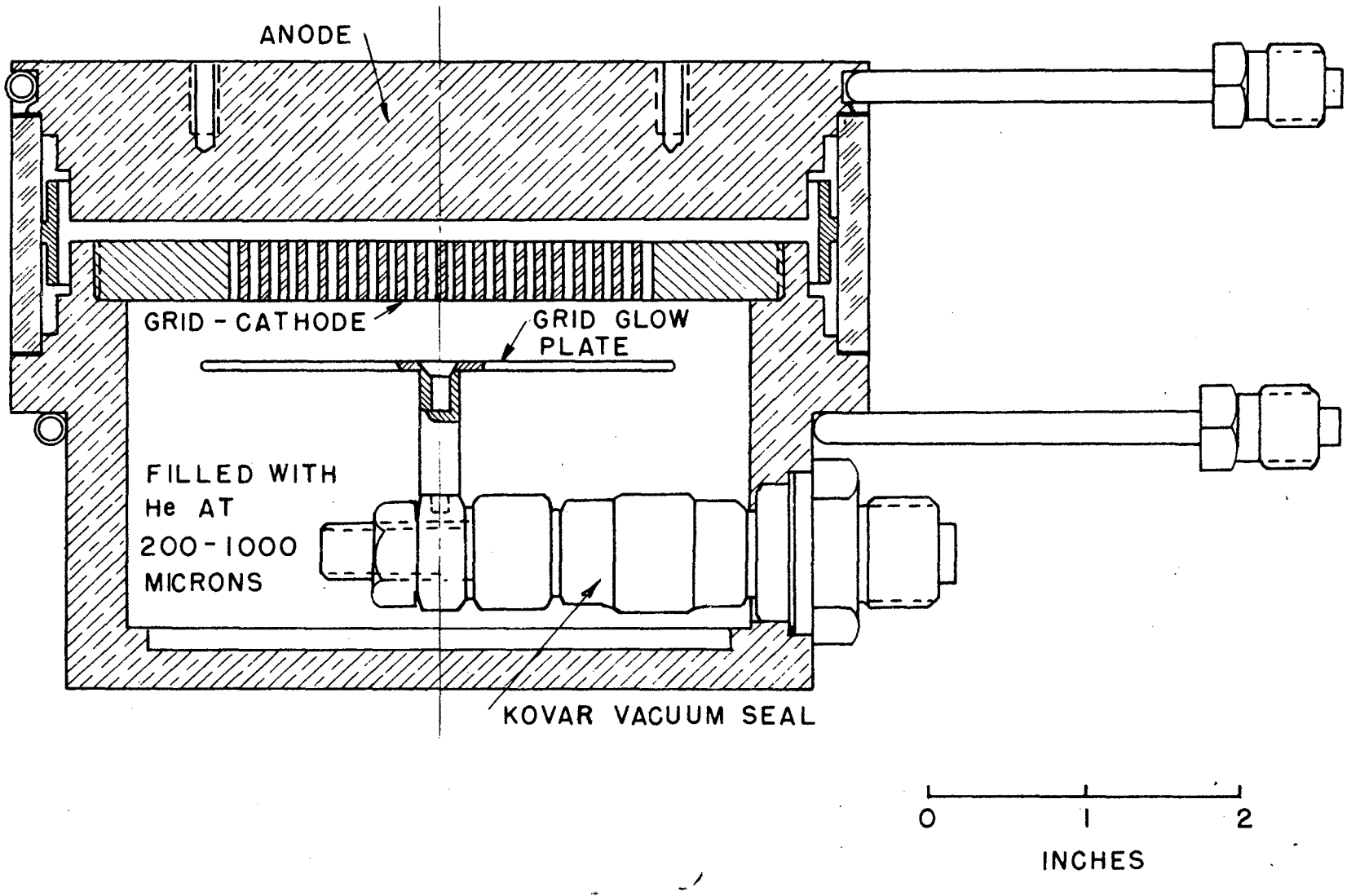

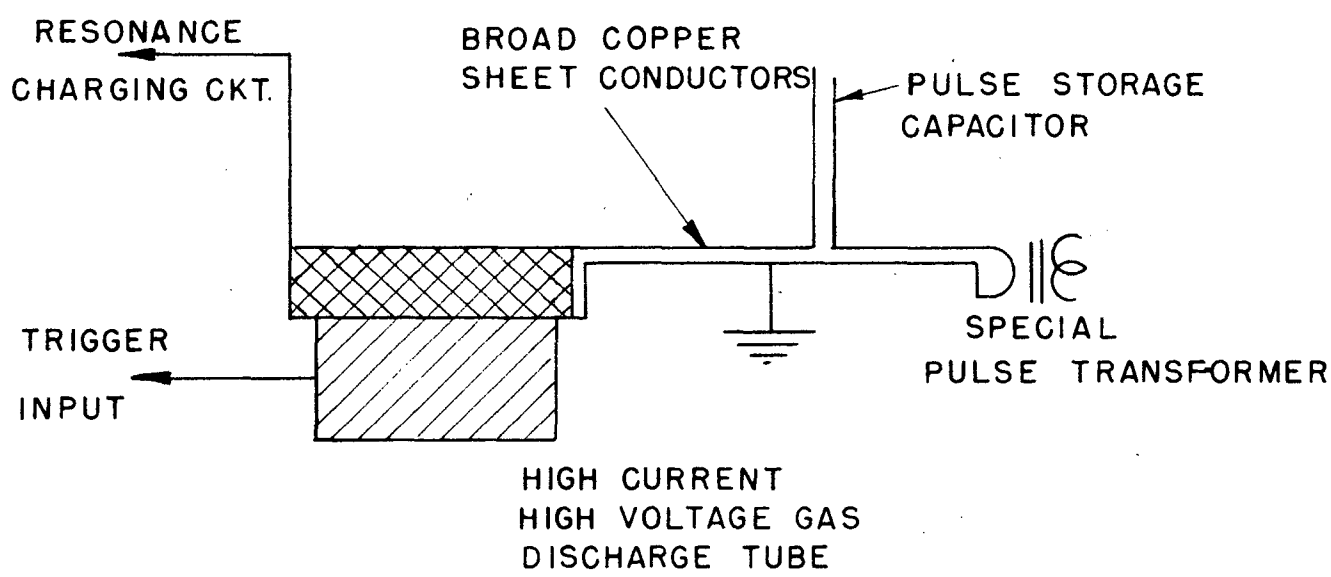

FIG. 1

HIGH CURRENT, HIGH VOLTAGE GAS DISCHARGE TUBE AND PRESENT CIRCUIT APPLICATION

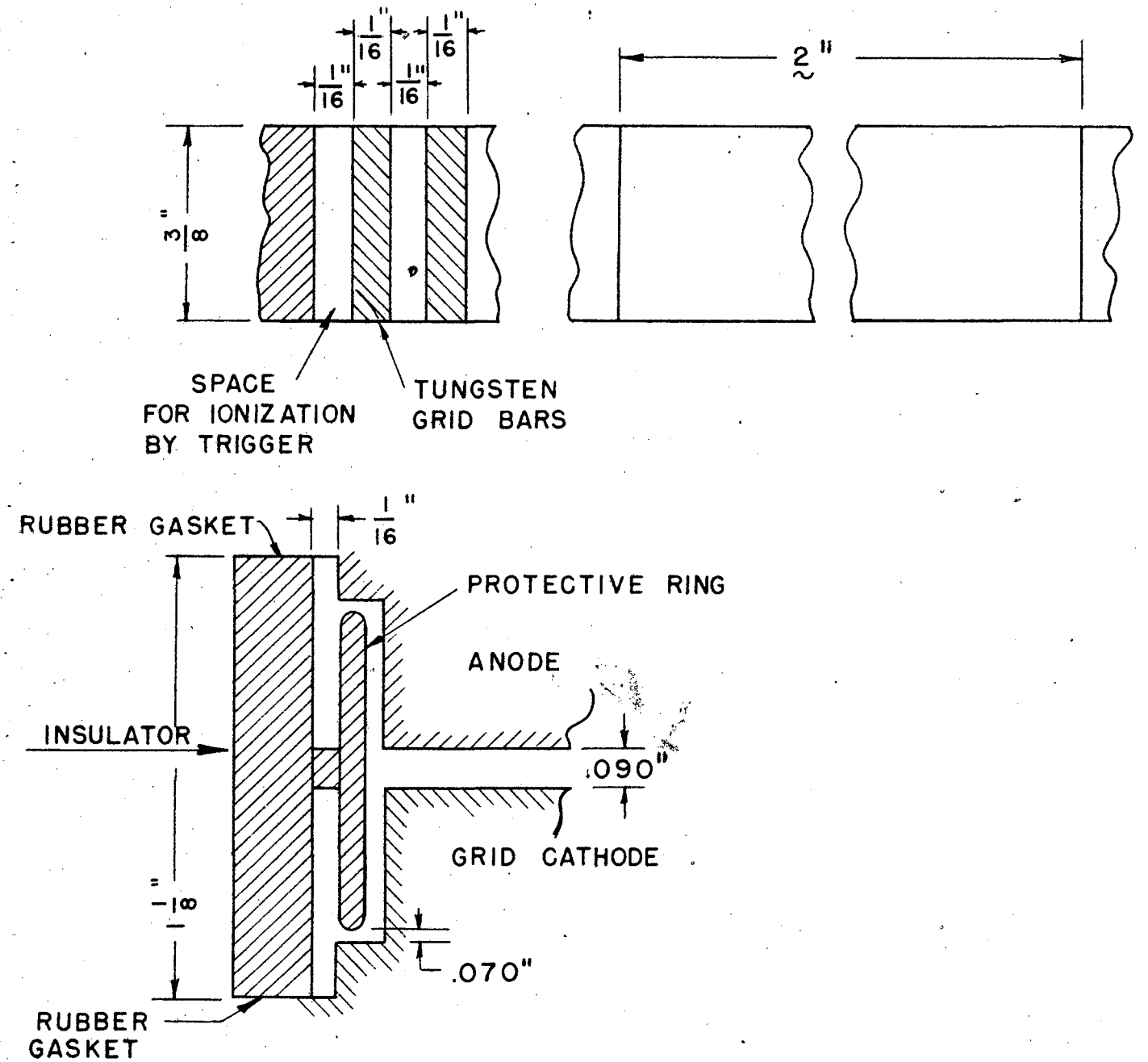

FIG. 2

GRID CATHODE SLATE DETAIL
AND TUBE INSULATOR SPACINGS

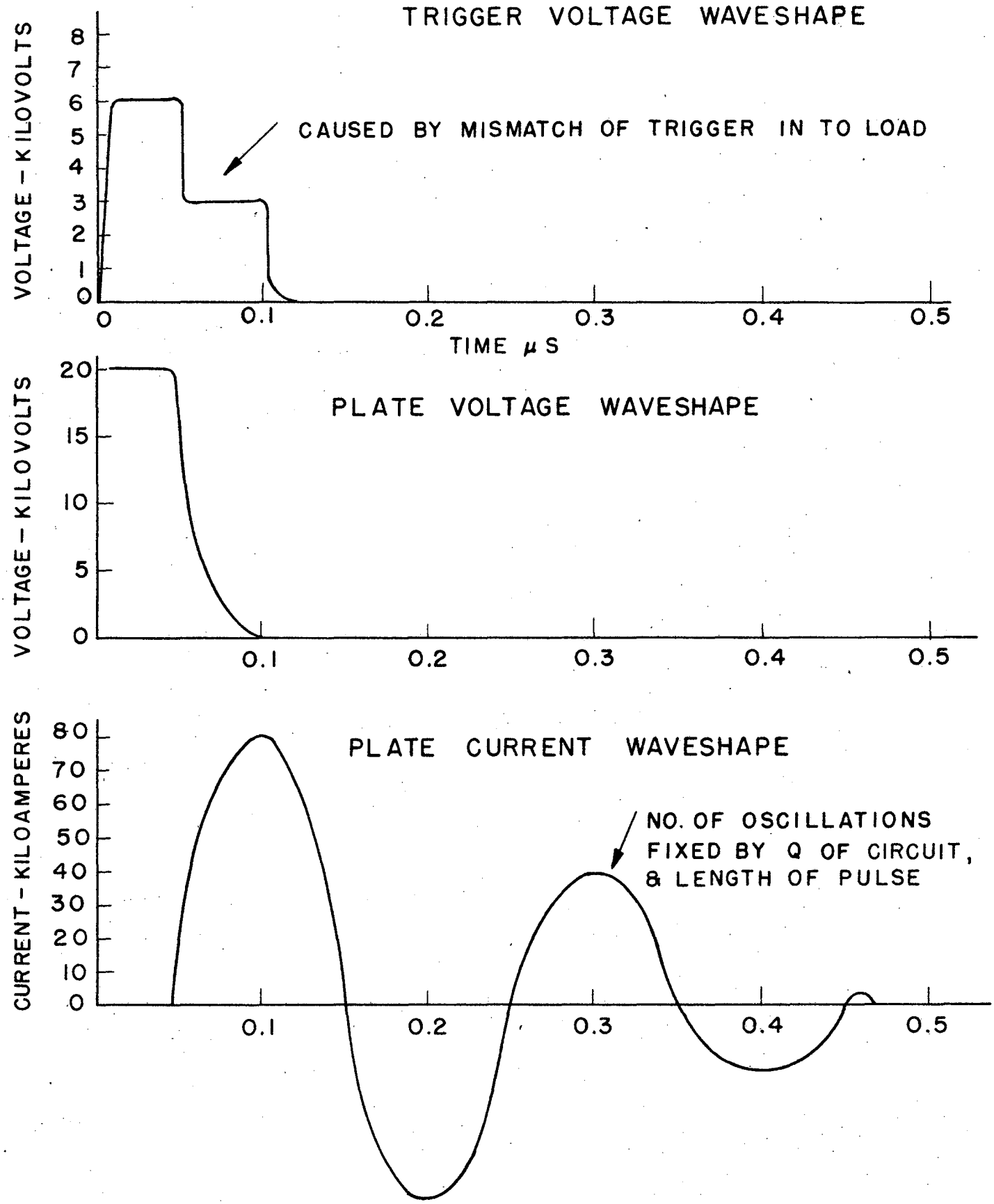

FIG. 3

TYPICAL WAVE SHAPES IN CIRCUIT SHOWN IN FIG. 1

FIG. 4

TUBE PARTS AFTER 50 HOURS CONTINUOUS OPERATIONS

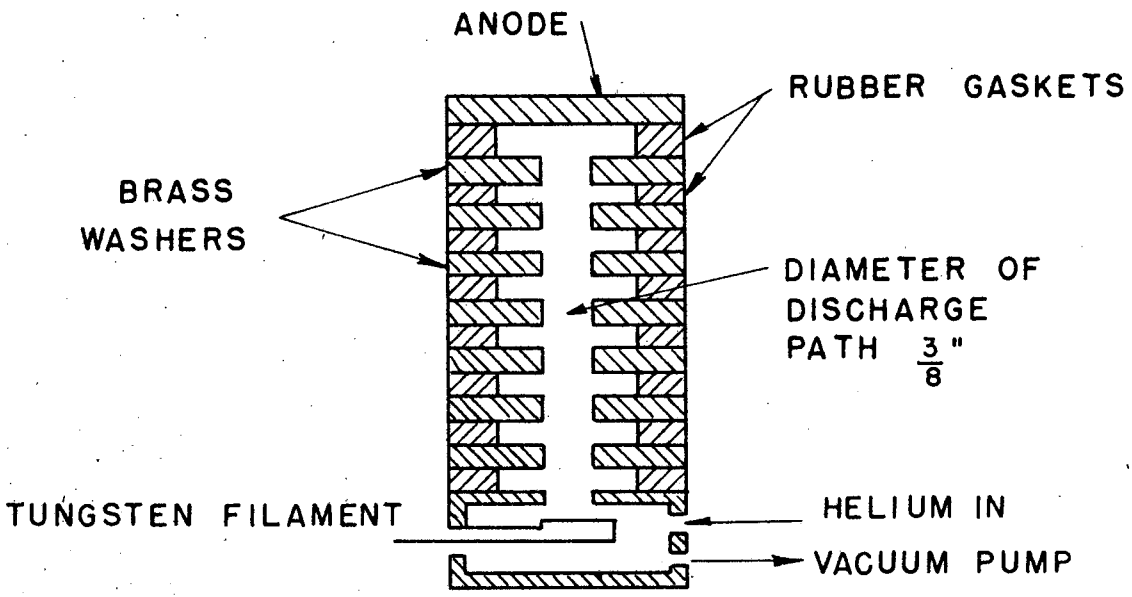

FIG. 5

EXPERIMENTAL HIGH VOLTAGE GAS DISCHARGE TUBE

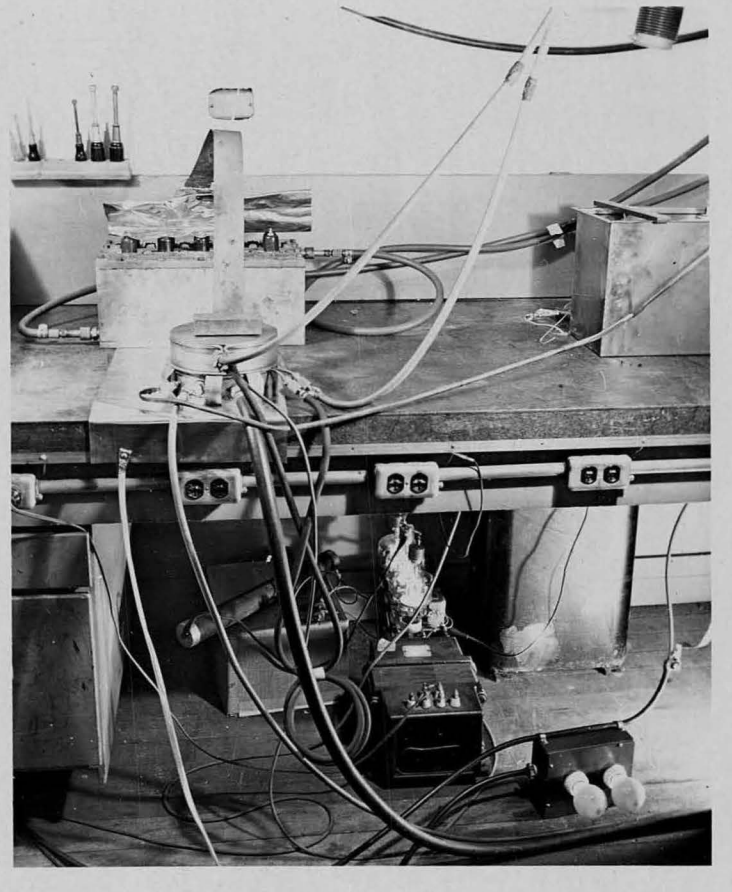

FIG. 6

GAS DISCHARGE TUBE UNDER TEST

FIG. 7
LATEST MODEL OF HIGH CURRENT-HIGH VOLTAGE GAS DISCHARGE TUBE

RE[illegible]SIFIED
DECLASSIFIED