UCRL- 1861

UNIVERSITY OF CALIFORNIA — BERKELEY

CONFIDENTIAL
SECURITY INFORMATION

DECLASSIFIED

TWO-WEEK LOAN COPY

This is a Library Circulating Copy which may be borrowed for two weeks. For a personal retention copy, call Tech. Info. Division, Ext. 5545

This material contains information affecting the National Defense of the United States within the meaning of the espionage laws, Title 18, U. S. C., Secs. 793 and 794, the transmission or revelation of which in any manner to an unauthorized person is prohibited by law.

RADIATION LABORATORY

UCRL 1861 c.2

CONFIDENTIAL
SECURITY INFORMATION

DISCLAIMER

This document was prepared as an account of work sponsored by the United States Government. While this document is believed to contain correct information, neither the United States Government nor any agency thereof, nor the Regents of the University of California, nor any of their employees, makes any warranty, express or implied, or assumes any legal responsibility for the accuracy, completeness, or usefulness of any information, apparatus, product, or process disclosed, or represents that its use would not infringe privately owned rights. Reference herein to any specific commercial product, process, or service by its trade name, trademark, manufacturer, or otherwise, does not necessarily constitute or imply its endorsement, recommendation, or favoring by the United States Government or any agency thereof, or the Regents of the University of California. The views and opinions of authors expressed herein do not necessarily state or reflect those of the United States Government or any agency thereof or the Regents of the University of California.

UNIVERSITY OF CALIFORNIA
Radiation Laboratory

UCRL-1661

Cover Sheet
Do not remove

INDEX NO. _____
This document contains 56 pages
This is copy 62 of ~~58~~ series A

INFORMATION DIVISION
RADIATION LABORATORY
UNIVERSITY OF CALIFORNIA
BERKELEY, CALIFORNIA

DECLASSIFIED

Issued to _____

CONFIDENTIAL

Classification

Each person who receives this document must sign the cover sheet in the space below.

Route to	Noted by	Date	Route to	Noted by	Date
R. L. Dobson		8-10-55			

I-5(M)

UCRL-1561
Health and Biology

[redacted]

UNIVERSITY OF CALIFORNIA

Radiation Laboratory

Contract No. W-7405-eng-48

Classification cancelled by authority of the Office of Declassification 4-25-52
Date

DECLASSIFIED

MEDICAL AND HEALTH PHYSICS

QUARTERLY REPORT

July, August, and September, 1951

November 5, 1951

CONFIDENTIAL

This material contains information affecting the National Defense of the United States within the meaning of the espionage laws, Title 18, U. S. C., Secs. 793 and 794, the transmission or revelation of which in any manner to an unauthorized person is prohibited by law.

Berkeley, California

DECLASSIFIED

DECLASSIFIED

STANDARD DISTRIBUTION: SERIES A	Copy Numbers
Aircraft Nuclear Propulsion Project	1-2
Argonne National Laboratory	3-10
Armed Forces Special Weapons Project (Washington)	11
Army Chemical Center	12
Atomic Energy Commission, Washington	13-15
Brookhaven National Laboratory	16-18
Bureau of Medicine and Surgery	19
Carbide and Carbon Chemicals Company (K-25 Plant)	20
Carbide and Carbon Chemicals Company (ORNL)	21-28
Carbide and Carbon Chemicals Company (Y-12 Area)	29-32
Chicago Patent Group	33
Chief of Naval Research	34
Columbia University (Failla)	35
duPont Company	36-38
General Electric Company, Richland	39-41
Hanford Operations Office	42
Iowa State College	43
Knolls Atomic Power Laboratory	44
Los Alamos	45-47
Mound Laboratory	48-50
Naval Medical Research Institute	51
New York Operations Office	52-54
Patent Branch, Washington	55
Public Health Service	56
Savannah River Operations Office	57
U.S. Naval Radiological Defense Laboratory	58
UCLA Medical Research Laboratory (Warren)	59
University of California Radiation Laboratory	60-63
University of Rochester	64-65
University of Tennessee (Comar)	66
University of Washington	67
Western Reserve University (Friedell)	68-71
Wright Air Development Center	72-73
Technical Information Service, Oak Ridge	74-88

INFORMATION DIVISION
Radiation Laboratory
University of California
Berkeley, California

TABLE OF CONTENTS

		Page
I	THE METABOLIC PROPERTIES OF VARIOUS MATERIALS	
	Radioautography	4
	Tracer Studies	6
	Radiochemistry	22
	Radiation Chemistry	25
	Organic Solutes	29
II	BIOLOGICAL STUDIES OF RADIATION EFFECTS	
	Use of a Gamma Ray Pinhole Camera for In-vivo Studies	32
	Use of the Gamma Ray Pinhole Camera for Ground Surface Survey	37
	The Use of Tritium for Body Water Determination	38
III	HEALTH AND CHEMISTRY PHYSICS	
	Health Chemistry	53
	Health Physics	55

*Previous Quarterly Reports:

Oct., Nov., Dec., 1947	UCRL-41
Jan., Feb., Mar., 1948	UCRL-98
Apr., May, June, 1948	UCRL-157
Jul., Aug., Sept. 1948	UCRL-193
Oct., Nov., Dec., 1948	UCRL-270
Jan., Feb., Mar., 1949	UCRL-332
Apr., May, June, 1949	UCRL-414
Jul., Aug., Sept. 1949	UCRL-480
Oct., Nov., Dec., 1949	UCRL-587
Jan., Feb., Mar., 1950	UCRL-683
Apr., May, June, 1950	UCRL-806
Jul., Aug., Sept. 1950	UCRL-960
Oct., Nov., Dec., 1950	UCRL-1143
Jan., Feb., Mar., 1951	UCRL-1282
Apr., May, June, 1951	UCRL-1437

DECLASSIFIED

CONFIDENTIAL

I THE METABOLIC PROPERTIES OF VARIOUS MATERIALS

Joseph G. Hamilton, M.D.

Project 48A

The work done during the present quarter was somewhat handicapped by two circumstances. First, there was the usual depletion of the staff from vacations. The second factor which significantly impeded our activities has been some rather extensive alterations in the building.

Radioautography

C. W. Asling and Gretchen Thilo

The liver sections examined consisted of histological sections and radioautographs of the liver of rats which had received carrier-free Au^{196} administered intravenously. The first animal received 7.5 microcuries and was sacrificed 1 day after injection; the liver contained 50 percent of the injected dose. The other animal received 12 microcuries and was sacrificed 4 days after injection; the liver contained 43 percent of the injected dose. The histological sections were cut at 5 to 6 microns and radioautographs made on NTB stripping film emulsion and the tissue was subsequently stained with hematoxylin and eosin. No essential differences were observed after the two time intervals. The following discussion represents the composite impression.

Under low power magnification moderate numbers of clusters of silver granules represented the autograph of the gold. The clusters showed no definite pattern and at first impression appeared scattered without order; however, they were found most commonly in the periphery of the lobule in the neighborhood of the portal areas. Fewer clusters were found in the mid-zone of the lobule and very rarely were they seen near the central vein. Many were so dense as to obscure the associated cellular structure, but others allowed clear visualization of the tissue. In these latter cases the cells originating the autograph were not hepatic cells proper, i.e., they did not possess the large, round vesicular nucleus, foamy cytoplasm, and polygonal shape characterizing the liver cell. Rather, they had smaller, denser nuclei of irregular form and often elongated. These cells were of inconstant shape. In a few instances, optical sections (using the oil immersion lens) demonstrated that the cells contained dark granular deposits, occasionally clearly clustered near a nuclear Hof. Elsewhere these visible intracellular granules, about 3 microns in size, of particulate matter occupied an eccentric position with respect to the nucleus. The radioautographic clusters of silver grains, definitely separable from the particles in the tissue, appeared to center above them.

There were similar cells containing similar particulate matter which gave rise to no radioautograph. On the other hand, radioautographic images could be found without obvious corresponding intracellular granules. However, when the cells associated with these latter images were examined by dark field,

DECLASSIFIED

CONFIDENTIAL

it often proved possible to establish the presence of the originating granules which could not be seen by conventional illumination.

The liver tissue here studied was densely packed so that clear division of the hepatic cell cords and sinusoids was difficult. Nevertheless, the impression was gained that the cells containing the particulate matter and originating the autograph are Kupffer cells of the sinusoidal specific endothelium (reticulo-endothelial system). Since apparently particulate matter is found which did not originate an autograph, it seems possible that the visible particles are not aggregates of colloidal gold, but rather represent other material on which the gold has been adsorbed.

In addition to the autographs of Au^{196} in rat liver, work was continued on Pu in lungs. These samples were used as radiation sources for experimental techniques with NTA stripping film. The advantage of the Pu lies in the fact that the alpha tracks are easily distinguished from any possible fogging, either chemical or mechanical.

A series of lung sections autographs were prepared by the usual mounting method that was used for the Au^{196} autographs. That is, the sections were mounted directly onto the emulsion and stained after development of the film. These were used for comparison.

Various attempts to use the film, emulsion side down, over a section on a slide proved unsuccessful. The backing is very impervious to water solution and even attempts to dissolve it with methyl cellosolve did not give uniform results.

The method of Boyd and Williams of mounting the section onto the backing of stripped film in a frame proved very successful for heavy alpha burst autographs. When such an autograph is obtained from the tissue on the emulsion, the density of the autograph obscures the source in the tissue. By placing the section on the backing, the 7 to 10 micron interspace of the support cuts down the resolution, but enables one to see the tissue more clearly. Also the stain does not penetrate the backing so the emulsion is clear.

The loss of resolution in this method does not recommend it for beta emitters.

Tracer Studies

K. G. Scott, Josephine Crowley and Patricia Wallace

The carrier-free radioisotopes employed in the tracer studies were prepared by the staff of the Radiochemistry Section. The details of the procedures may be had from this and previous Quarterly Progress Reports.

Tungsten^{181}. W^{181} has been administered to rats intravenously, intramuscularly, and intragastrically in order to study the metabloism of this compound in the carrier free state. After intravenous administration a large concentration of W^{181} was found in kidney. This rapidly dropped with the passage of time. After 4 days, 97 percent of the tungsten administered had been excreted, primarily in the urine. Of the material remaining in the animals, no specific amount was observed either in soft tissues or in skeleton. These data are summarized in Table I.

When tungsten is administered intramuscularly, it is completely absorbed within the 24-hour time period shown in Table II. After absorption, the same initial high kidney uptake was observed. Ninety-six percent of the tungsten absorbed was excreted within the 24-hour time period shown. Forty-five percent of the tungsten given remained unabsorbed in the left leg at the 4-hour period and 62 percent in the 24-hour period.

One study has been completed with tungsten in the rat 4 hours after intragastric administration. At this time period the majority of the material was found in the gastro-intestinal tract. Measurable amounts were observed to be present in soft tissues and in urine and feces, suggesting that tungsten is absorbed through the gastro-intestinal tract. This suggests that at the 4-hour time interval approximately 10 percent was absorbed. These data are summarized in Table III.

Thallium^{200,201,202}. Studies have been conducted in rats with carrier-free thallium, using thallium which was a mixture of the isotopes $Tl^{200,201,202}$. After intravenous administration of carrier-free thallium to rats, it was observed that this element is rather uniformly deposited in soft tissues and in skeleton, with the exception of a higher concentration in kidney. Muscle appears to be the principal reservoir for the radio-thallium. The greatest part of the thallium administered was excreted and found in the feces, fecal and urinary excretion amounting to approximately 89 percent of the administered dose 15 days after administration. It does not appear that thallium is localized, concentrated, or tenaciously retained to a marked degree in any of the tissues observed. These data are summarized in Table IV.

In one study in which thallium was administered to rats intra-gastrically, some soft tissue and skeletal uptake was observed when these animals were sacrificed 8 days after administration. Approximately 83 percent of the thallium administered was recovered in the urine and feces. Of the balance remaining in the animal, the kidney contained most of the administered dose on a per gram wet weight basis. These data are summarized in Table V.

A comparison of reported distribution of macroscopic quantities of

TABLE I

THE DEPOSITION OF CARRIER-FREE W^{181} IN THE RAT 2, 4, 24 HOURS AND 4 DAYS AFTER INTRAVENOUS INJECTION. VALUES ARE CORRECTED FOR RECOVERY AND ARE EXPRESSED IN PERCENT OF ADMINISTERED DOSE. EACH RAT IN THE 2, 4, 24 HOUR AND 4 DAY GROUPS RECEIVED 2.0, 0.91, 1.0 and 1.5 MICROCURIES RESPECTIVELY.

Organ	2 Hour		4 Hour		24 Hour		4 Days	
	% per organ	% per gram	% per organ	% per gram	% per organ	% per gram	% per organ	% per gram
Heart	.41	.50	.08	.08	<.3	-	<.2	-
Lung	1.46	.70	.90	.46	<.3	-	<.2	-
Spleen	.89	.79	.15	.15	<.3	-	<.2	-
Blood	11.3	.77	1.66	.10	<.3	-	<.2	-
Liver	6.43	.70	1.65	.17	1.00	.10	.35	<.2
Kidney	38.1	20.6	2.57	1.25	<.3	-	<.2	-
Stomach	.56	.44	.17	.15	<.3	-	<.2	-
St.Cont.	.37	-	.30	-	<.3	-	<.2	-
Sm.Int.	2.40	.49	.60	.08	<.3	-	<.2	-
S.I.Cont.	1.12	-	.55	-	<.3	-	<.2	-
Lg.Int.	1.20	-	.51	.16	<.3	-	<.2	-
L.I.Cont.	.31	-	1.97	-	.48	.12	<.2	-
Pancreas	.28	.30	.14	.15	<.3	-	<.2	-
Skeleton	4.55	.23	7.42	.34	<.3	-	1.30	<.2
Muscle	11.4	.10	3.71	.03	1.80	.12	<.2	-
Skin	7.90	.21	4.98	.09	.53	<.3	.31	<.2
Fat	-	.06	-	.05	<.3	-	<.2	-
Brain	.04	.02	.07	.03	<.3	-	<.2	-
Eyes	.04	.11	.08	.24	<.3	-	<.2	-
Pituitary	.03	-	.06	-	<.3	-	<.2	-
Gonads	.03	.35	.26	.09	<.3	-	<.2	-
Thyroid	.01	-	.02	-	<.3	-	<.2	-
Adrenal	.02	-	.03	-	<.3	-	<.2	-
Lym.Gl.	-	.11	-	.16	-	<.3	-	<.2
Urine	11.1	-	72.1	-	86.81	-	82.4	-
Feces	.04	-	.06	-	9.38	-	15.6	-

TABLE II

THE DEPOSITION OF CARRIER-FREE W^{181} IN THE RAT 4 AND 24 HOURS AFTER INTRAMUSCULAR INJECTION. VALUES ARE CORRECTED FOR RECOVERY AND ARE EXPRESSED IN PERCENT OF ABSORBED DOSE. EACH RAT IN THE 4 AND 24 HOUR GROUPS RECEIVED 2.0 AND 0.61 MICROCURIES RESPECTIVELY.

	4 hour		24 Hours	
Organ	% per organ	% per gram	% per organ	% per gram
Heart	.29	.34	.04	.03
Lung	.82	.44	.05	.02
Spleen	.53	.48	.09	.08
Blood	5.87	.40	.18	<.01
Liver	5.66	.61	.13	<.01
Kidney	20.2	12.4	.43	.12
Stomach	.53	.40	.12	.11
St.Cont.	.27	-	.08	-
Sm.Int.	2.19	.48	.05	.01
Sm.Int.Cont.	1.33	-	.32	-
Lg. Int.	1.28	.38	.06	.02
Lg.Int.Cont.	.88	-	.09	-
Pancreas	.27	.21	.04	.03
Skeleton	7.37	.38	1.22	.06
Muscle	12.0	.13	.04	<.01
Skin	9.13	.29	.28	<.01
Fat	-	.11	-	.02
Brain	.02	.02	.03	.01
Eyes	.02	.04	.03	.10
Pituitary	<.02	-	.08	-
Gonads	.04	.29	.05	.02
Thyroid	<.02	-	.04	-
Adrenal	<.02	-	.03	-
Lymph Gl.	-	.29	-	.23
Urine	30.8	-	91.9	-
Feces	.51	-	4.63	-

TABLE III

THE DEPOSITION OF CARRIER-FREE W^{181} IN THE RAT 4 HOURS AFTER ORAL ADMINISTRATION. VALUES ARE CORRECTED FOR RECOVERY AND ARE EXPRESSED IN PERCENT OF ADMINISTERED DOSE. EACH RAT RECEIVED 2.0 MICROCURIES.

Organ	% per organ	% per gram
Heart	.03	.03
Lung	.11	.06
Spleen	.07	.04
Blood	.95	.06
Liver	.79	.08
Kidney	1.29	.75
Stomach	22.2	11.6
Sm. Int.	28.5	3.76
Lg. Int.	31.1	5.63
Pancreas	.10	.08
Skeleton	1.34	.06
Muscle	1.47	.02
Skin	1.54	.04
Fat	<.01	-
Brain	<.01	-
Eyes	<.01	-
Pituitary	<.01	-
Gonads	<.01	-
Thyroid	<.01	-
Adrenal	<.01	-
Lymph Gl.	<.01	-
Urine	6.91	-
Feces	3.60	-

TABLE IV

THE DEPOSITION OF CARRIER-FREE $Tl^{200,201,202}$ IN THE RAT 18 HOURS, 4 AND 15 DAYS AFTER INTRAVENOUS INJECTION. VALUES ARE CORRECTED FOR RECOVERY AND ARE EXPRESSED IN PERCENT OF ADMINISTERED DOSE. EACH RAT IN THE 18 HOUR, 4 AND 15 DAY GROUPS RECEIVED 6.2, 20 AND 18.6 MICROCURIES RESPECTIVELY.

	18 hour		4 day		15 day	
Organ	% per organ	% per gram	% per organ	% per gram	% per organ	% per gram
Heart	.47	.64	.20	.29	<.01	-
Lung	.54	.38	.35	.23	.08	.06
Spleen	.37	.41	.18	.23	<.01	-
Blood	.31	.02	.18	.02	<.01	-
Liver	3.84	.43	1.79	.21	.41	.05
Kidney	5.28	3.62	3.06	1.91	.78	.50
Stomach	.54	.47	.33	.35	<.01	-
St. Cont.	.18	-	.84	-	<.01	-
Sm.Int.	2.67	.68	1.15	.23	.21	.07
Sm.Int.Cont.	2.04	-	1.51	-	.27	-
Lg. Int.	.98	.39	.62	.30	.08	.04
Lg.Int.Cont.	3.06	-	3.17	-	.20	-
Pancreas	.29	.34	.20	.33	<.06	-
Skeleton	5.50	.40	3.74	.28	.86	.07
Muscle	53.92	.56	25.6	.31	5.62	.31
Skin	7.98	.22	4.35	.16	2.54	.08
Fat	-	.04	-	.03	-	<.01
Brain	.27	.16	.23	.14	<.01	-
Eyes	.09	.29	.03	.10	<.01	-
Pituitary	<.01	-	<.01	-	<.01	-
Gonads	.03	.22	.03	.18	<.01	-
Tyhroid	<.01	-	<.01	-	<.01	-
Adrenal	.03	-	.02	-	<.01	-
Lymph Gl.	-	.18	-	.08	<.01	-
Urine	7.29	-	12.2	-	16.14	-
Feces	4.32	-	40.3	-	72.8	-

TABLE V

THE DEPOSITION OF CARRIER-FREE $Tl^{200,201,202}$ IN THE RAT 8 DAYS AFTER ORAL ADMINISTRATION. VALUES ARE CORRECTED FOR RECOVERY AND ARE EXPRESSED IN PERCENT OF ADMINISTERED DOSE. EACH RAT RECEIVED 20 MICROCURIES.

Organ	% per organ	% per gram
Heart	.13	.21
Lung	.63	.36
Spleen	.11	.14
Blood	.04	<.01
Liver	1.28	.16
Kidney	2.52	1.59
Stomach	.28	.12
Sm. Int.	1.46	.20
Lg. Int.	1.78	.26
Pancreas	.14	.09
Skeleton	1.99	.16
Muscle	16.2	.19
Fat	-	<.01
Brain	.12	.08
Eyes	.02	.05
Pituitary	<.01	-
Gonads	<.01	-
Thyroid	<.01	-
Adrenal	<.01	-
Lymph Gl.	-	<.01
Urine	18.2	-
Feces	55.1	-

thallium with the carrier-free experiments we have attempted does present some points of interest. The information concerning distribution of thallium in macroscopic amounts is not easy to interpret, as it was secured from studies in chronic thallium toxicity which may have significantly altered the distribution pattern as compared to the administration of a single, relatively non-toxic dose of thallium. At any event, the information available stated that concentrations were highest in the liver, brain, and skeletal muscle, relatively low in the kidneys and none in the fat. This is somewhat in variance with our results, particularly in the case of brain, fat and kidneys.

Speculation as to the possible high deposition of thallium in the skin arose in view of the fact that it acts as a depilatory when either applied locally or administered in larger quantities internally.

Should, in the future, need arise to study the question of thallium toxicity, it would be advisable to extend the carrier-free tracer studies, as well as administer radio-thallium diluted with small amounts of inert thallium compounds to other groups of animals. A difference in the metabolic characteristics of carrier-free radio-thallium and thallium containing carrier is quite probable.

A striking example of this phenomenon were the studies done in the past with silver in which radio-silver, and radio-silver diluted with stable silver were given to rats, and the fate studied of the radio-silver under these two conditions. When carrier-free radio-silver was employed, it was excreted with great rapidity and very little retained in any of the tissues or organs of the body. The addition of carrier presented a metabolic picture which closely resembled that observed in chronic silver poisoning, as for example, considerable deposition and prolonged retention in the liver and skin.

Scandium^{46,47,48}. Studies with carrier-free scandium which was a mixture of the isotopes of $Sc^{46,47,48}$ have been conducted in rats. In animals sacrificed 4 days after intravenous administration the largest amount of this element was found in the liver and other components of the reticulo-endothelial system. Skeletal deposition was minimal. The amount of scandium excreted for this time period was less than 25 percent. These data are summarized in Table VI.

Some studies in which scandium was given by intramuscular injection showed that scandium is absorbed from the site of injection with difficulty; 76.6 percent remained in the injection site 4 days after administration. When scandium was given by this route, a relatively greater percent was found in skeleton. Larger amounts were also observed to be present in liver, kidney, and spleen. These data are summarized in Table VII.

As we subject the scandium data to careful scrutiny, a very interesting observation becomes evident. The high liver uptake following intravenous administration is not too surprising in view of the chemical and physical properties of scandium which will be discussed below briefly. The fact that there was a high liver uptake following intramuscular injection is puzzling. In our studies with the type 4 F and 5 F rare earths, high liver uptake values suggestive of colloidal-like behavior could usually be avoided either by the use of complexing agents, or intramuscular injection, or a combination of both. Even in the case of yttrium, which bears rather close chemical relationship to the 4 F rare earth series, liver uptake was not impressively high following

TABLE VI

THE DEPOSITION OF CARRIER-FREE $Sc^{46,47,48}$ IN THE RAT 4 DAYS AFTER INTRAVENOUS INJECTION. VALUES ARE CORRECTED FOR RECOVERY AND ARE EXPRESSED IN PERCENT OF ADMINISTERED DOSE. EACH RAT RECEIVED 2.1 MICROCURIES.

Organ	% per organ	% per gram
Heart	.11	.16
Lung	.48	.30
Spleen	2.06	2.53
Blood	.59	.05
Liver	46.8	6.34
Kidney	1.76	1.16
Stomach	.21	.29
St.Cont.	.29	-
Sm.Int.	1.32	.40
Sm.Int.Cont.	1.39	-
Lg. Int.	.53	.30
Lg. Int. Cont.	1.47	-
Pancreas	.28	.20
Skeleton	8.92	.67
Muscle	5.64	.07
Skin	7.04	.22
Fat	-	.06
Brain	.03	.02
Eyes	.02	.06
Pituitary	.01	<.01
Gonads	.10	.53
Thyroid	<.01	-
Adrenal	.11	-
Lymph Gl.	-	.38
Urine	1.88	-
Feces	19.0	-

TABLE VII

THE DEPOSITION OF CARRIER-FREE $Sc^{46,47,48}$ IN THE RAT 4 DAYS AFTER INTRAMUSCULAR INJECTION. VALUES ARE CORRECTED FOR RECOVERY AND ARE EXPRESSED IN PERCENT OF ABSORBED DOSE. EACH RAT RECEIVED 2.1 MICROCURIES.

Organ	4 day % per organ	4 day % per gram
Heart	.30	.35
Lung	.70	.45
Spleen	1.56	1.51
Blood	1.61	.15
Liver	21.2	2.36
Kidney	2.21	1.66
Stomach	.40	.50
St. Cont.	.20	-
Sm. Int.	2.36	.75
Sm. Int. Cont.	2.06	-
Lg. Int.	1.06	.55
Lg. Int. Cont.	1.71	-
Pancreas	.65	.45
Skeleton	15.9	1.05
Muscle	12.5	.15
Skin	13.8	.45
Fat	-	.10
Brain	.10	.05
Eyes	.10	.50
Pituitary	.05	-
Gonads	.05	.40
Thyroid	.05	-
Adrenal	.15	-
Lymph Gl.	-	1.26
Urine	2.36	-
Feces	18.9	-

intramuscular injection. It may be recalled that in the case of the 4 F series the lightest members of that group possess relatively strong basic properties even though their hydroxides are quite insoluble. Due to the lanthanide contraction, the basicity diminishes to the point where with lutecium, the last of the series, it is comparable to that of yttrium. In fact, yttrium in a sense cannot be considered as a true base, for it does possess amphoteric-like properties. For example, yttrium carbonate is normally highly insoluble, but in the presence of high concentrations of carbonate ion, it is possible to dissolve considerable quantities of this compound. From its position in the Periodic Table, one would predict that scandium would have even more acid-like properties. The implication of this is that one might anticipate that scandium, even though in as nearly a carrier-free state as possible, to do one of several things. Even though it is possible to do intramuscular injection with solutions whose pH is of the order of 3.5 to 4, a strong possibility exists that scandium atoms might become adsorbed onto minute particulate matter which may be present in the solution regardless of how much care has been taken to avoid this circumstance. Then the possibility must be considered of the presence of aggregates of scandium ions of a colloidal-like character. Although the so-called "carrier-free" radio-scandium is prepared from calcium of a high degree of purity, micro amounts may be present which are too minute to be readily determined. Finally, following the intramuscular administration of the radio-scandium, should the radio-scandium be in solution at the time of injection as free scandium ions, immediately the pH of the aqueous environment rises to that of the tissue fluids, which is about 7.4 It becomes apparent that as soon as this action takes place, the scandium will become chemically tied up with phosphates and carbonates, and possibly by proteins. That it became firmly fixed, was evidenced as it was stated above less than 25 percent was removed from the site of injection at the end of 16 days. This in itself is not an unusual observation for it has occurred to a comparable, and sometimes to a greater, degree with the chemically related rare earths. To speculate on what actually is taking place is difficult and this obviously might lead to some very definite misconceptions. At this juncture, about all that can be said is that the most likely possibility is that some adsorptive or colloidal-like process is a significant factor which is a reasonable hypothesis. The question may be raised as to the manner by which the yttrium gained access to the circulating blood. With respect to this situation, it is most likely that it was carried by the lymphatic system.

Quite coincidentally, an interesting aspect of this situation was elucidated to some extent by the gold radioautographic studies. They are discussed in detail under that section, but it may be pertinent to draw attention here to some of the observations.

As may be seen from the section described in the tracer studies on gold, this carrier-free radioelement is accumulated and retained tenaciously in the liver. When these experiments were being conducted, radioautographs were made from some of the liver tissue. Upon careful dark field examination at high magnification, there were found what appeared to be particulate matter of the order of 2 microns in size which were present in the Kupffer cells. These were of random distribution and the significant observation was that wherever there was evidence of activity from the radio-gold accumulated in the liver, there was present one of these small unidentified particles. However, only some of the particles were associated with the photographic evidence

of the presence of radio-gold, thus strongly suggesting that the source of these small particles in the Kupffer cells was not the same as the source of radio-gold. This is a very surprising observation and deserves further exploration. Unfortunately, it was not possible to do similar studies with the radio-scandium, but it is hoped that this may be undertaken when time permits in the not-too-distant future, for the same effect might be found with the radio-scandium as with the radio-gold.

Gold^{196}. Deposition of carrier-free Au^{196} has been studied in rats 1, 4, 7, and 17 days after intravenous injection. Gold is primarily localized in the liver when administered in this manner, localization being of a rather permanent nature. For example, 17 days after intravenous administration, 97.4 percent of the dose was found in the liver. The only other concentration of interest was that it was found in the spleen. Gold is not readily excreted in either urine or feces.

Similar studies at 1 and 16 days with carrier-free gold in which sodium thiosulphate was simultaneously administered as a stabilizing agent demonstrated no essential difference in deposition, the liver again being the major organ of deposit. These data are summarized in Tables VIII and IX.

When carrier-free gold is administered intragastrically, less than 0.01 percent of the dose given was found in the liver. The gold was almost quantitatively recovered in the feces. These data are summarized in Table X.

From the radioautographic work done on liver tissue in this particular experiment, some most unusual results have been noted which have been mentioned briefly in the preceding discussion on scandium, and are presented in more detail in the radioautographic section.

Thulium^{170}. The skeletal uptake and retention of radio-thulium are, as with most 4 F and 5 F rare earths, both high and prolonged. These studies on the deposition of thulium complexed with citrate, using pile-produced Tm^{170} as a tracer, have been completed in rats 256 days after intramuscular injection to one group and intravenous injection to another group. At these time periods studied the skeleton remains the primary depository of the thulium administered and represented over 50 percent of the dose. Approximately 44 percent was excreted almost equally in urine and feces. These data are summarized in Table XI.

Eight months after intramuscular injection, 16.2 percent of the thulium administered still remained at the injection site. Of the material absorbed, 44.7 percent was found in skeleton and approximately 49 percent was excreted in urine and feces. The deposition of thulium in these animals does not differ in any major respect from the thulium studies reported in earlier work. The data on intramuscular deposition of thulium are summarized in Table XII.

TABLE VIII

THE DEPOSITION OF CARRIER-FREE Au^{196} IN THE RAT 1, 4, 7, AND 17 DAYS AFTER INTRAVENOUS INJECTION. VALUES ARE CORRECTED FOR RECOVERY AND ARE EXPRESSED IN PERCENT OF ADMINISTERED DOSE. EACH RAT IN THE 1, 4, 7, AND 17 DAY GROUPS RECEIVED 4.5, 4.5, 4.0 AND 4.0 MICROCURIES RESPECTIVELY.

	1 day		4 day		7 day		17 day	
Organ	% per organ	% per gram	% per organ	% per gram	% per organ	% per gram	% per organ	% per gram
Heart	<.1	-	<.2	-	<.2	-	<.2	-
Lung	3.15	1.44	3.17	1.96	.22	.10	<.2	-
Spleen	6.58	7.20	7.87	6.21	1.71	1.90	1.30	1.63
Blood	1.04	.06	<.2	-	<.2	-	<.2	-
Liver	66.4	5.08	76.6	6.90	95.5	10.3	97.4	12.7
Kidney	1.70	.73	1.38	.58	<.2	-	<.2	-
Stomach	<.1	-	<.2	-	<.2	-	<.2	-
St. Cont.	1.43	-	<.2	-	<.2	-	<.2	-
Sm. Int.	.13	-	<.2	-	<.2	-	<.2	-
Sm. Int. Con.	<.1	-	<.2	-	<.2	-	<.2	-
Lg. Int.	.11	.04	<.2	-	<.2	-	<.2	-
L.I. Cont.	<.1	-	<.2	-	<.2	-	<.2	-
Pancreas	<.1	-	<.2	-	<.2	-	<.2	-
Skeleton	6.94	.36	4.46	.24	.32	.02	.46	.04
Muscle	2.33	.01	1.29	.01	<.2	-	.29	<.2
Skin	2.90	.05	1.41	.03	<.2	-	.20	-
Fat	-	-	-	-	<.2	-	<.2	-
Brain	<.1	-	<.2	-	<.2	-	<.2	-
Eyes	<.1	-	<.2	-	<.2	-	<.2	-
Pituitary	<.1	-	<.2	-	<.2	-	<.2	-
Gonads	.20	.06	.31	.12	<.2	-	<.2	-
Thyroid	<.1	-	<.2	-	<.2	-	<.2	-
Adrenal	<.1	-	<.2	-	<.2	-	<.2	-
Lym. Gl.	-	.17	-	.15	<.2	-	<.2	-
Urine	5.96	-	1.03	-	1.97	-	.16	-
Feces	.83	-	2.52	-	.31	-	.18	-

TABLE IX

THE DEPOSITION OF CARRIER-FREE Au^{196} IN THE RAT 1, AND 16 DAYS AFTER INTRAVENOUS INJECTION. VALUES ARE CORRECTED FOR RECOVERY AND ARE EXPRESSED IN PERCENT OF ADMINISTERED DOSE. EACH RAT IN THE 1 AND 16 DAY GROUP RECEIVED 4.1 AND 12 MICROCURIES Au^{196} AND 1.6 AND 4.8 MILLIGRAMS SODIUM THIOSULPHATE RESPECTIVELY.

Organ	1 day		16 days	
	% per organ	% per gram	% per organ	% per gram
Heart	.02	.02	<.01	-
Lung	.63	.36	.15	.11
Spleen	2.60	2.67	3.00	2.43
Blood	.23	<.01	<.01	-
Liver	95.3	11.2	95.8	11.8
Kidney	.06	.03	.19	.11
Stomach	.06	.05	<.01	-
St. Cont.	<.01	-	-	-
Sm. Int.	.02	<.01	.02	<.01
S.I. Cont.	.02	-	-	-
Lg. Int.	.02	.01	.01	<.01
L.I. Cont.	.04	-	-	-
Pancreas	.07	.04	.06	.04
Skeleton	.40	.03	.57	.04
Muscle	.08	<.01	<.01	-
Skin	.12	<.01	.10	<.01
Fat	-	<.01	-	.02
Brain	<.01	-	.03	.02
Eyes	<.01	-	<.01	-
Pituitary	<.01	-	<.01	-
Gonads	<.01	-	<.01	-
Thyroid	<.01	-	<.01	-
Adrenal	<.01	-	<.01	-
Lym. Gl.	<.01	-	<.01	-
Urine	.11	-	.02	-
Feces	.16	-	.07	-

TABLE X

THE DEPOSITION OF CARRIER-FREE Au^{196} IN THE RAT 7 DAYS AFTER ORAL ADMINISTRATION. VALUES ARE CORRECTED FOR RECOVERY AND ARE EXPRESSED IN PERCENT OF ADMINISTERED DOSE. EACH RAT RECEIVED 20 MICROCURIES.

Organ	% per organ	% per gram
Heart	<.01	-
Lung	<.01	-
Spleen	<.01	-
Blood	.06	<.01
Liver	<.01	-
Kidney	<.01	-
Stomach	<.01	-
Sm. Int.	<.01	-
Lg. Int.	<.01	-
Pancreas	<.01	-
Skeleton	.05	<.01
Muscle	<.01	-
Skin	<.01	-
Fat	<.01	-
Brain	<.01	-
Eyes	<.01	-
Gonads	<.01	-
Thyroid	<.01	-
Adrenal	.01	-
Lym. Gl.	-	.07
Urine	.21	-
Feces	99.67	-

TABLE XI

THE EFFECT OF A COMPLEXING AGENT ON THE DEPOSITION OF THULIUM IN THE RAT USING Tm^{170} AS A TRACER 256 DAYS AFTER INTRAVENOUS INJECTION. VALUES ARE CORRECTED FOR RECOVERY AND EXPRESSED IN PERCENT OF ABSORBED DOSE. EACH RAT RECEIVED 1.6 MICROGRAMS OF THULIUM AND 5 MICROCURIES OF Tm^{170}.

Organ	% per organ	% per gram
Heart	.02	.02
Lung	.16	.05
Spleen	.10	.09
Blood	<.01	-
Liver	.14	.01
Kidney	.18	.06
Stomach	.02	<.01
Sm. Int.	.03	<.01
Lg. Int.	.02	<.01
Pancreas	<.01	-
Skeleton	54.0	2.46
Muscle	.68	<.01
Skin	.79	.01
Fat	-	<.01
Brain	.01	<.01
Eyes	<.01	-
Pituitary	<.01	-
Gonads	.13	.05
Thyroid	<.01	-
Adrenal	<.01	-
Lymph Gl.	-	<.01
Urine	20.6	-
Feces	23.2	-

TABLE XII

EFFECT OF A COMPLEXING AGENT ON THE DEPOSITION OF THULIUM IN THE RAT USING Tm^{170} AS A TRACER 256 DAYS AFTER INTRAMUSCULAR INJECTION. VALUES ARE CORRECTED FOR RECOVERY AND EXPRESSED IN PERCENT OF ABSORBED DOSE. EACH RAT RECEIVED 2.5 MICROGRAMS OF THULIUM AND 10 MICROCURIES OF Tm^{170}.

Organ	% per organ	% per gram
Heart	<.01	-
Lung	.13	.05
Spleen	.18	.13
Blood	<.01	-
Liver	.26	.03
Kidney	.34	.13
Stomach	.03	<.01
Sm. Int.	.05	<.01
Lg. Int.	.04	<.01
Pancreas	<.01	-
Skeleton	44.7	2.12
Muscle	4.48	.03
Skin	1.56	.03
Fat	-	<.01
Brain	<.01	-
Eyes	<.01	-
Pituitary	<.01	-
Gonads	.18	.12
Thyroid	<.01	-
Adrenal	<.01	-
Lymph Gl.	-	<.01
Urine	19.3	-
Feces	28.8	-

Radiochemistry

W. M. Garrison, J. D. Gile, H. R. Haymond and D. C. Morrison

Carrier-Free $Au^{195,196,198,199}$ from Platinum. Radioactive gold, produced by bombardment of platinum with 19-Mev deuterons, has been isolated without added isotopic carrier. Four known long-lived radioisotopes of gold are produced by (d,n) and (d,2n) reactions with deuterons of this energy: 180-day Au^{195}, 5.6 day Au^{196}, 2.7-day Au^{198}, and 3.3-day Au^{199}. The shorter-lived activities (Au^{193} and Au^{194}) were allowed to decay out prior to chemical separation. Other possible concurrent reactions include formation of radioisotopes of platinum by (d,p) reactions and radioisotopes of iridium by (n,p) reactions. The carrier-free radio-gold was separated from the target material and from possible radioisotopes of iridium by a solvent extraction method using ethyl ether.

Five 1 mil foils of C.P. platinum (spectrographically pure - less than .01 percent gold) were clamped to a water-cooled copper target plate and bombarded with 19-Mev deuterons for a total of 20 microampere hours at an average beam intensity of 10 microamperes, in the 60-inch cyclotron at Crocker Laboratory. The bombarded foils were dissolved in a minimum volume of aqua-regia. Twelve N HCl was added to destroy excess HNO_3, the solution was diluted to approximately 15 ml of 3 N HCl, and the radio-gold was extracted with ethyl ether which had previously been saturated with 3 N HCl. Four extractions with ethyl ether were needed to remove most of the radio-gold from the aqueous phase. The ether layer was washed with 6 N HCl and the activity was quantitatively retained in the organic layer. Fifty milligrams of NaCl were added to the ether phase and the mixture was evaporated to 1 ml on a steam bath. The carrier-free radio-gold plus the NaCl was diluted to 5 ml to give an isotonic saline solution for subsequent biological investigations.

The radio-gold was identified by half-life determinations, absorption measurements, and by a chemical separation procedure using carriers. The decay was followed for 60 days and showed an initial composite half-period of approximately 3.5 days, presumably due to $Au^{198,199}$. Four days after chemical separation the dacay curve showed mainly the 5.6-day period of Au^{196}. After 15 days the curve began to lengthen perceptibly and 25 days after chemical separation the activity showed only the 180-day period, which was presumably Au^{195}. Aluminum and lead absorption measurements 6 days after bombardment showed the approximately 0.43 Mev beta particle and the 0.37 Mev gamma ray previously reported for Au^{196}. An aliquot of the solution was added to a solution containing carrier-amounts of iridium, platinum and gold. The radioactivity was quantitatively recovered in the gold fraction following chemical separation.

Carrier-Free W^{181} from Tantalum. Deuteron bombardment of tantalum produces the 140-day W^{181} by the nuclear reaction $Ta^{181}(d,2n)W^{181}$. This paper reports a radiochemical isolation of carrier-free W^{181} from a tantalum target bombarded with 19 Mev deuterons in the 60-inch cyclotron at Crocker Laboratory. Other possible concurrent reactions include formation of radioisotopes of tantalum by the (d,p) reaction and hafnium by the (n,p) reaction.

The target, a circular plate of tantalum metal (tungsten-free by spectrographic analysis) approximately 10 mils thick, mounted in a bell-jar type of target assembly, was bombarded with 19 Mev deuterons for a total of 500 microampere hours at an average beam intensity of 20 microamperes. The back of the tantalum foil was cooled with a stream of cold water. After bombardment, the tantalum foil was trimmed and the inactive metal discarded. The tantalum was dissolved in a minimum volume of 16 N HNO_3 containing 10 percent HF by volume in a platinum evaporating dish. The HF was removed by boiling with 36 N H_2SO_4 and the cooled acid solution poured slowly into an excess of 20 percent NaOH with constant stirring. The precipitate was digested for 30 minutes and the tantalum hydroxide separated by centrifugation with repeated reductions in volume of the basic solution. The carrier-free tungsten was retained in the supernatant. This process was repeated three times to insure complete removal of the radio-tungsten from the tantalum target. The combined supernatants were evaporated to a small volume, the Na_2SO_4 formed by evaporation was centrifuged out, and the radio-tungsten was recovered in the supernatant. The basic solution was acidified with HCl, 5 milligrams of Fe^{+3} were added and the solution carefully brought to pH 4 with NaOH. At this pH the $Fe(OH)_3$ carries the radio-tungsten quantitatively. Three such precipitations were done to insure the complete removal of any tantalum present. The $Fe(OH)_3$ was dissolved in 6 N HCl and the iron extracted with ethyl ether. The aqueous phase containing HCl and W^{181} was evaporated to dryness on 20 milligrams NaCl. The activity dissolved quantitatively in distilled water.

The decay curve was followed for 130 days and showed the 140-day half-life of W^{181}. Mass absorption measurements in aluminum and lead showed the 0.07 Mev conversion electron and the 0.13 Mev and 1.8 Mev gamma rays previously reported for W^{181}. A trace amount of carrier-free tungsten was added to a solution containing milligram amounts of tungsten, tantalum and hafnium; the tungsten fraction was separated chemically and contained 98 percent of the activity.

Carrier-Free $Ir^{188,190,192}$ from Osmium. Bombardment of osmium with 19 Mev deuterons produces, by (d,2n) and (d,n) reactions, several relatively long-lived, known, radioactive isotopes of iridium; viz., Ir^{187}, Ir^{188}, two isomers of Ir^{190}, and Ir^{192}. Radioisotopes of rhenium and osmium are also produced concurrently in relatively low yield by (n,p) and (d,p) reactions. This paper reports a method for isolation of iridium activities from irradiated osmium without the addition of stable iridium carrier.

The target was osmium powder (ca 0.5 g) in which no iridium (less than 0.01%) was detected by spectrographic analysis. The osmium powder was held on a grooved, water-cooled target plate by a 0.25 mil platinum foil during bombardment in the 60-inch Crocker Laboratory cyclotron.

After bombardment the osmium powder was dissolved, with heating, in a minimal amount of aqua regia. Excess nitric acid was added and the solution was heated to dryness to distill off the osmium tetraoxide. Two milliliters of nitric acid was added and heated to dryness. Two milliliters of sulfuric acid was added and heated to fuming. Into the fuming sulfuric acid, 1 ml of HBr was added dropwise to remove radioactive rhenium. The sulfuric acid was

heated to dryness. The remaining activity was taken up in 5 ml HCl and transferred to a 10 ml beaker. Twenty-five milligrams of NaCl was added and the solution was heated to dryness. The NaCl was dissolved in water to give a solution of isotonic saline suitable for biological use.

The decay periods of the isolated activity agreed with published data. Decay half-lives of approximately 40 hours, 12.5 days and 72 days could be resolved. No attempt was made to detect shorter periods. Identification was further verified by a chemical separation of iridium from an aliquot of the preparation using milligram amounts of rhenium, osmium, and iridium as carriers.

Other Radiochemistry. The following carrier-free radioactivities were separated from cyclotron targets using previously reported procedures: $Tl^{200,201,202}$, $Sc^{46,47,48}$, and Mn^{54}. The Mn^{54} was separated from the vanadium target using a slightly modified procedure from that previously reported for the separation of carrier-free chromium from vanadium.

Radiation Chemistry

W. M. Garrison, H. R. Haymond and D. C. Morrison

Target Assembly. The centrifugal pump target assembly which has been developed for cyclotron irradiation of liter amounts of solution under controlled conditions has been evaluated. In the original design previously reported, the rotating shaft was supported by a flexible connection to the driving motor and alignment was obtained by the use of two glass-to-glass bearing surfaces. It was found after prolonged operation that the solution showed a definite Tyndall effect which resulted from the colloidally dispersed glass which was removed from the glass bearings. Because of the known influence of colloidal material on radiation induced reactions, it was thought advisable to redesign the centrifugal pump target so that there would be no contact of moving parts. This was accomplished by modifying the glass assembly and by rigidly supporting the rotor in a chuck which is in turn attached to the shaft of the air motor. A schematic diagram of the redesigned centrifugal pump target is shown in Fig. 1. The liquid is drawn up through the hollow rotating shaft and ejected into the radiation chamber (F) as in the original design. However, it is returned to the storage reservoir through the annular space (D) or through the by-pass (B). Since the moving part of the pump does not make contact with other glass surfaces, solutions have shown no Tyndall effect after as much as 8 to 10 hours of operation and in this way the contribution of the colloidal material has been eliminated. The mixing time of the centrifugal pump target at a rotor speed of 1500 r.p.m. as determined by stroboscopic methods was of the order of 1 to 2 seconds with a circulating volume of 400 ml of aqueous solution. The apparatus may be operated continually at this speed.

Radiation Actinometry. Irradiation induced oxidation of the ferrous ammonium sulphate system has been investigated as part of the program of determining the accuracy and precision with which the 60-inch cyclotron may be used as a radiation source in studying the chemical effects of heavy particle irradiation. A series of 500 ml samples of 0.25 M ferrous ammonium sulphate, 1 N H_2SO_4 have been bombarded with 35.5 Mev helium ions under different conditions of beam intensity, bombardment time, and with varying gas flow rates. The course of the reaction was followed by titrating with standard $KMnO_4$ samples of the irradiated solution which were removed at periodic intervals. It has been found that the ion-pair yield for ferrous ion oxidation in oxygen saturated solutions of ferrous sulphate, 1 N H_2SO_4 are independent of the beam intensity over the range 0.5 to 1 microampere. No effect of change in oxygen flow rate from 100 cc/min down to 20 cc/min could be detected. Wider changes in beam current and oxygen flow rate conditions were not studied because the ferrous sulphate results were obtained primarily as radiation actionometry data to evaluate the precision and accuracty of the experimental techniques. Variations in beam intensity from 0.5 to 1 microampere and flow rates of 25 cc to 100 cc were easily obtained experimental variables, and calibration of the cyclotron beam and the target system can be made reproducible within these limits. The experimental data shown in Fig. 2 are reproducible to within $\pm$ 2 percent.

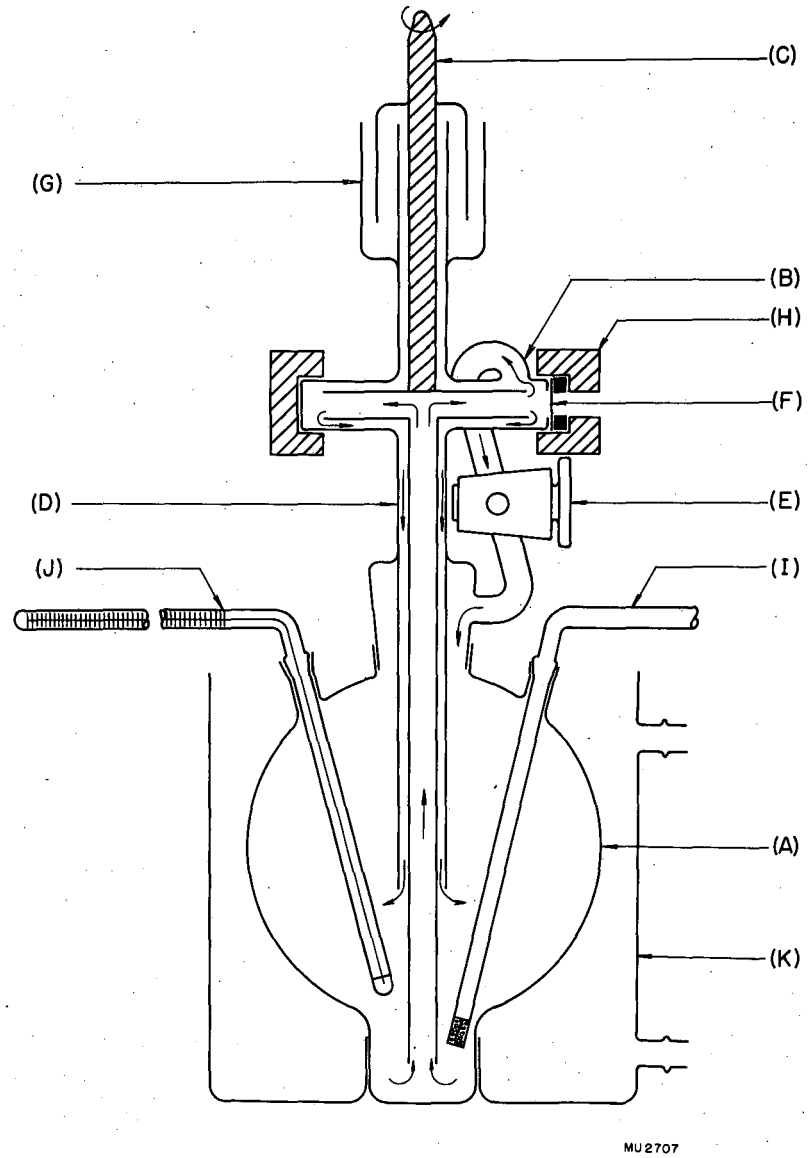

Fig. 1

Legend for Fig. 1: Schematic diagram of glass centrifugal pump assembly.

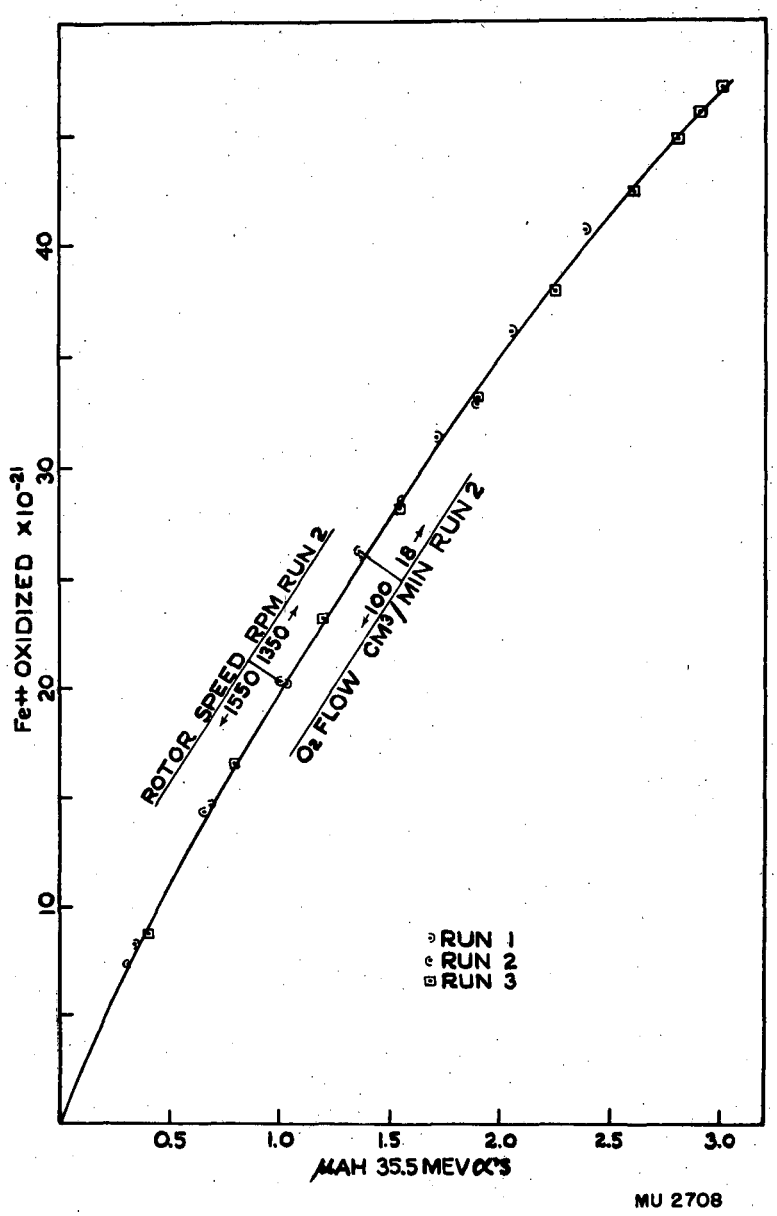

Fig. 2

Legend for Fig. 2: Yield data for radiation induced oxidation of ferrous ammonium sulphate solution.

The initial slope corresponds to an ion-pair yield of 1.81, assuming 32.5 ev/ion-pair. The curve indicates a gradual change in ion-pair yield as lower ferrous concentrations are reached. This effect has previously been reported by others with heavy particle irradiation of ferrous sulphate solution using naturally occurring alpha emitters as radiation sources.

Mass spectrometric* analyses of the effluent gas indicate that the net reaction is not simply one of the radiation induced oxidation of ferrous ion. With ferrous ammonium sulphate, it has been observed in our studies that hydrogen and nitrogen are also produced. The presence of nitrogen indicates that ammonium ion is also being oxidized. The yield of nitrogen increases as the ferrous ion is oxidized.

Ferrous ammonium sulphate was used in the preliminary actinometry because it is readily available in a high degree of purity and is stable towards air oxidation. Experiments are in progress in which ferrous sulphate solutions will be irradiated under similar experimental conditions and these results will be presented in forthcoming reports.

---

* These analyses were made by Dr. A. Newton.

Organic Solutes

W. M. Garrison, H. R. Haymond and D. C. Morrison

Radiation Synthesis. Work is being continued on the radiation synthesis of organic compounds from $C^{14}O_2$. The previously reported reductions of $C^{14}O_2$ in dilute acid solutions containing excess ferrous ion has also been observed in the bombardment of C^{14} labelled CO_2 in NaOH solution saturated with H_2. With ferrous ion as the reducing agent, the separation and identification of possible organic molecular species with the exception of formaldehyde, formic acid, and oxalic acid, is difficult because of the large excess of ferrous and ferric salts which are present. To simplify the problem of separation and identification of other possible radiation products of CO_2, bombardments were made of $C^{14}O_2$ in alkaline solutions saturated with H_2. In a typical experiment, 1 millicurie of $C^{14}O_2$ in 87 ml of 0.028 N NaOH was bombarded for 15 minutes with a 1 microampere beam of 35 Mev alpha particles. Under these conditions the amount of $C^{14}O_2$ reduced to formic acid amounted to approximately 10 percent that obtained in the acid ferrous sulphate solutions with identical irradiation conditions. The lower yield of formic acid presumably results from the fact that the solubility of hydrogen is not sufficient to prevent oxidation of formic acid. The synthesis of two carbon and more complex organic molecules from formic acid is being studied. Two types of experiments are in progress. In the first, C^{14} labelled formic acid will be irradiated. Some difficulty has been experienced in obtaining $HC^{14}OOH$ free from traces of oxalic acid. Samples of labelled formic acid are being purified for this reason using distillation techniques. These will be irradiated under various conditions and the product solutions will be analyzed using filter paper chromatography. In the second type of experiment, dilute solutions (approximately 0.1 N) of purified formic acid are bombarded using ferrous ion or hydrogen as the reducing solute and condensation products of higher molecular weight material will be looked for using conventional organic semi-micro procedures, together with partition chromatography.

Radiation Induced Oxidation. A series of stable and C^{14} labelled organic compounds are being purified for radiation induced oxidation studies. These include at the present time formic, acetic, and propionic acids. This work has just been started and will be reported later.

(1) Publications which have appeared:

Gile, J.D., Garrison, W.M., and Hamilton, J.G.: Carrier-free Radioisotopes from Cyclotron Targets. XVII. Preparation and Isolation of Fe^{59} from Cobalt. J. Chem. Phys. 19 1217 (September, 1951)

Gile, J.D., Garrison, W.M., and Hamilton, J.G.: Carrier-free Radioisotopes from Cyclotron Targets. XVIII. Preparation and Isolation of Cr^{51} from Vanadium. J. Chem. Phys. 19 1217 (September, 1951)

---

(2) Submitted for publication:

Gile, J.D., Garrison, W.M., and Hamilton, J.G.: Carrier-free Radioisotopes from Cyclotron Targets. XIX. Preparation and Isolation of $Pt^{191,193}$ from Osmium.

Gile, J.D., Garrison, W.M., and Hamilton, J.G.: Carrier-free Radioisotopes from Cyclotron Targets. XX. Preparation and Isolation of $Ru^{97,103}$ from Molybdenum.

Gile, J.D., Garrison, W.M., and Hamilton, J.G.: Carrier-free Radioisotopes from Cyclotron Targets. XXI. Preparation and Isolation of $Tl^{200,201,202}$ from Mercury.

Haymond, H.R., Garrison, W.M., and Hamilton, J.G.: Carrier-free Radioisotopes from Cyclotron Targets. XXII. Preparation and Isolation of Pb^{203} from Thallium.

Gile, J.D., Garrison, W.M., and Hamilton, J.G.: Carrier-free Radioisotopes from Cyclotron Targets. XXIII. Preparation and Isolation of $Rh^{100,101,102,105}$ from Ruthenium.

Garrison, W.M., and Hamilton, J.G.: The Production and Isolation of Carrier-free Radioisotopes.

Scott, K.G., Hamilton, J.G. and Wallace, P.C.: The Deposition of Carrier-free Radio-Vanadium in the Rat Following Intravenous Administration.

---

(3) Publications in progress:

Haymond, H.R., Garrison, W.M., and Hamilton, J.G.: Carrier-free Radioisotopes from Cyclotron Targets. XXIV. Preparation and Isolation of $Ir^{188,190,192}$ from Osmium.

Gile, J.D., Garrison, W.M., and Hamilton, J.G.: Carrier-free Radioisotopes from Cyclotron Targets. XXV. Preparation and Isolation of $Au^{195,196,198,199}$ from Platinum.

Gile, J.D., Garrison, W.M., and Hamilton, J. G.: Carrier-free Radioisotopes from Cyclotron Targets. XXVI. Preparation and Isolation of W^{181} from Tantalum.

Hamilton, J.G.: Astatine data.

Morrison, D.C.: Grignard Preparation of Fluorene-2-Carboxylic Acid.

Morrison, D.C.: Sulfonate Esters of Halogenated Phenols in Grignard Preparations.

II BIOLOGICAL STUDIES OF RADIATION EFFECTS

J. H. Lawrence - in charge

Project 48A-1

Use of a Gamma Ray Pinhole Camera for In-vivo Studies

H. O. Anger

Introduction. The pinhole camera method of taking gamma radioautographs, though it has been described in the literature [1], has had very little use because of the long exposure times which are necessary even when the most sensitive radiographic films are used. This paper will describe an intensifying screen for use with the pinhole camera which has made it possible to considerably reduce the exposure time when taking gamma ray radioautographs.

The intensifying screen consists of a large, flat thallium activated sodium iodide crystal. The gamma rays produce scintillations in the crystal which in turn expose the photographic plate.

This method has made it possible to take an in-vivo gamma ray pinhole radioautograph of a tumor containing 20 millicuries of I^{131}, as will be described later.

Design Details. A drawing of the pinhole camera and intensifying screen is shown in Fig. 1. The camera was designed to photograph relatively large objects such as thyroid glands and tumors. A large pinhole size 1/8 inch in diameter was chosen.

The operation of the camera is as follows. A gamma ray from the object being photographed goes through the pinhole and travels on until it enters the intensifying screen where it may produce a Compton or photoelectric recoil. The light produced along the path of the recoil is emitted isotropically. The spreading of the light over the photographic plate and the consequent loss of definition is limited both by inverse square law attenuation and by total reflection from the glass-to-air boundary between the crystal and photographic plate. This is illustrated in Fig. 2. The total reflection angle is about 35°. The light reflected from the glass surface passes back through the crystal and is absorbed by the black bakelite container.

There is a considerable loss in definition due to spreading of the light from the thick intensifying screen, even though it is limited as described above. In ordinary radiographic work this would not be permissible, but due to the relatively poor definition obtained from the pinhole camera, the additional loss in definition is relatively unimportant.

In order to get good optical contact between the crystal and the glass window, and also to protect the crystal from the effects of moist air, it is contained in a bath of Nujol after the method of Hofstadter and McIntryre [2].

Exposure Considerations. The camera was tested by taking autoradiographs of

bottles of I^{131} solution and it was found that a concentration of about 1 millicurie per square centimeter and an exposure time of 1 hour were sufficient to give a faint but useable image of the source. This is about 20 times less exposure time than is necessary if Kodak NO-Screen film is used with the lead foil intensifying screens customarily used for gamma work.

The exposure times given above are for the following conditions. The pinhole size was 1/8 inch; the pinhole-to-intensifying screen distance 7-1/2 inches; the intensifying screen was a 2 x 4 x 5/16 inch thick thallium activated sodium iodide crystal obtained from the Harshaw Chemical Company(3); the photographic plate was a Kodak type 103a-O spectroscopic plate slightly overdeveloped in D-19 developer.

It might be well to point out that varying the subject-to-pinhole distance does not affect the exposure time required unless the subject is so small or far away that it appears only as a point source on the photographic plate. This is due to the fact that if a large subject is moved closer to the camera, more radiation enters the pinhole but this radiation is spread over a larger area of the plate and the exposure time is unchanged.

Application. As mentioned before, the camera has been used to take an in-vivo gamma ray autoradiograph of an I^{131} bearing tumor. The tumor was a metastasis of a thyroid carcinoma. It was close to the skin, had a volume of 90 ml. and an area of about 20 square centimeters. The picture was taken 24 hours after a therepeutic dose of 100 millicuries of I^{131} was administered to the patient. It was determined independently that 20 millicuries lodged in the tumor. A one-hour exposure was taken and the resulting picture is shown in Fig. 3(b). The general outline of the area which took up the I^{131} is shown, together with the fact that it is concentrated in two main areas. A radiogram of the tumor taken from the same viewpoint is shown in Fig. 3(a).

Acknowledgments. The author wishes to acknowledge the interest of Dr. C. A. Tobias in this project and the assistance of Dr. Frank Pierce and Dr. Enrique Strajman in supplying the needed information about the patient.

Bibliography

1. D. Eugene Copeland and Emanuel W. Benjamin, Nucleonics 5, No. 2, 44 (1949).

2. Robert Hofstadter and John A. McIntyre, Nucleonics 7, No. 3, 32 (1950).

3. The Harshaw Chemical Company, 1945 East 97th Street, Cleveland 6, Ohio.

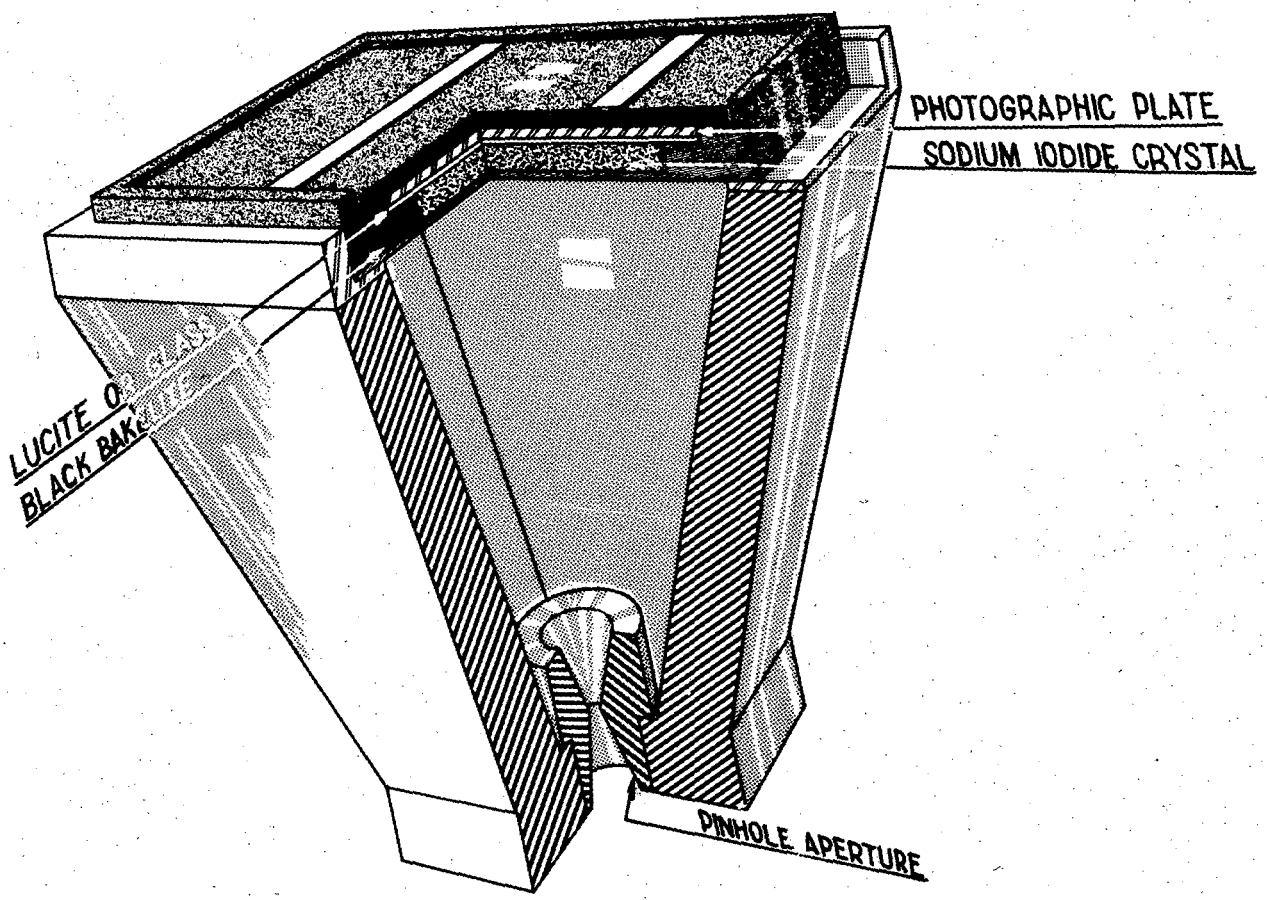
PHOTOGRAPHIC PLATE
SODIUM IODIDE CRYSTAL
LUCITE OR GLASS
BLACK BAKELITE
PINHOLE APERTURE

Fig. 1

PATH OF LIGHT RAYS FROM SCINTILLATION PRODUCED IN CRYSTAL

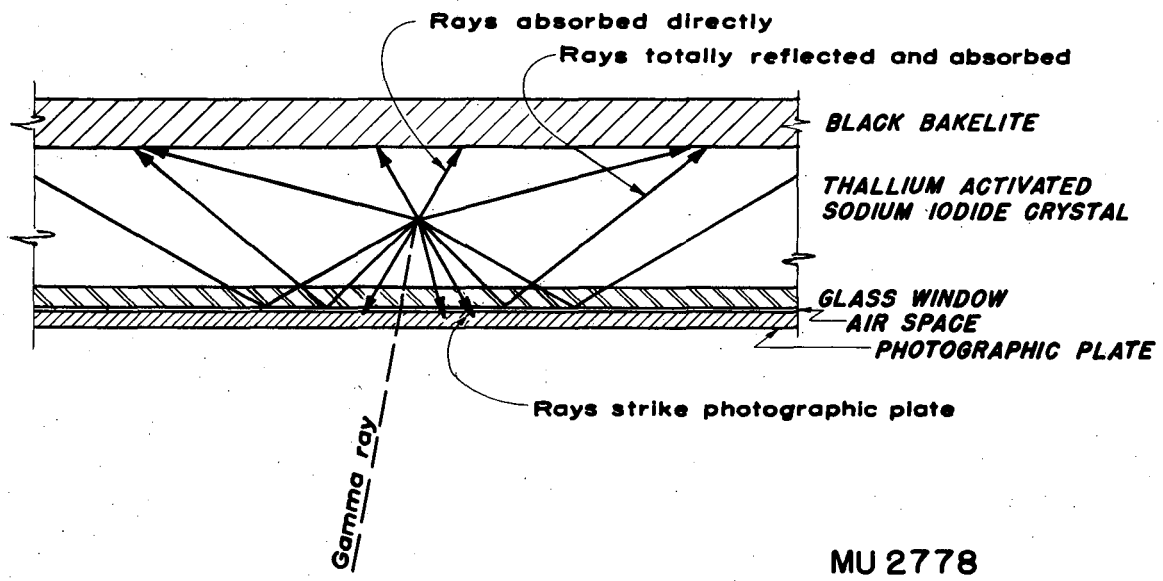

MU 2778

Fig. 2

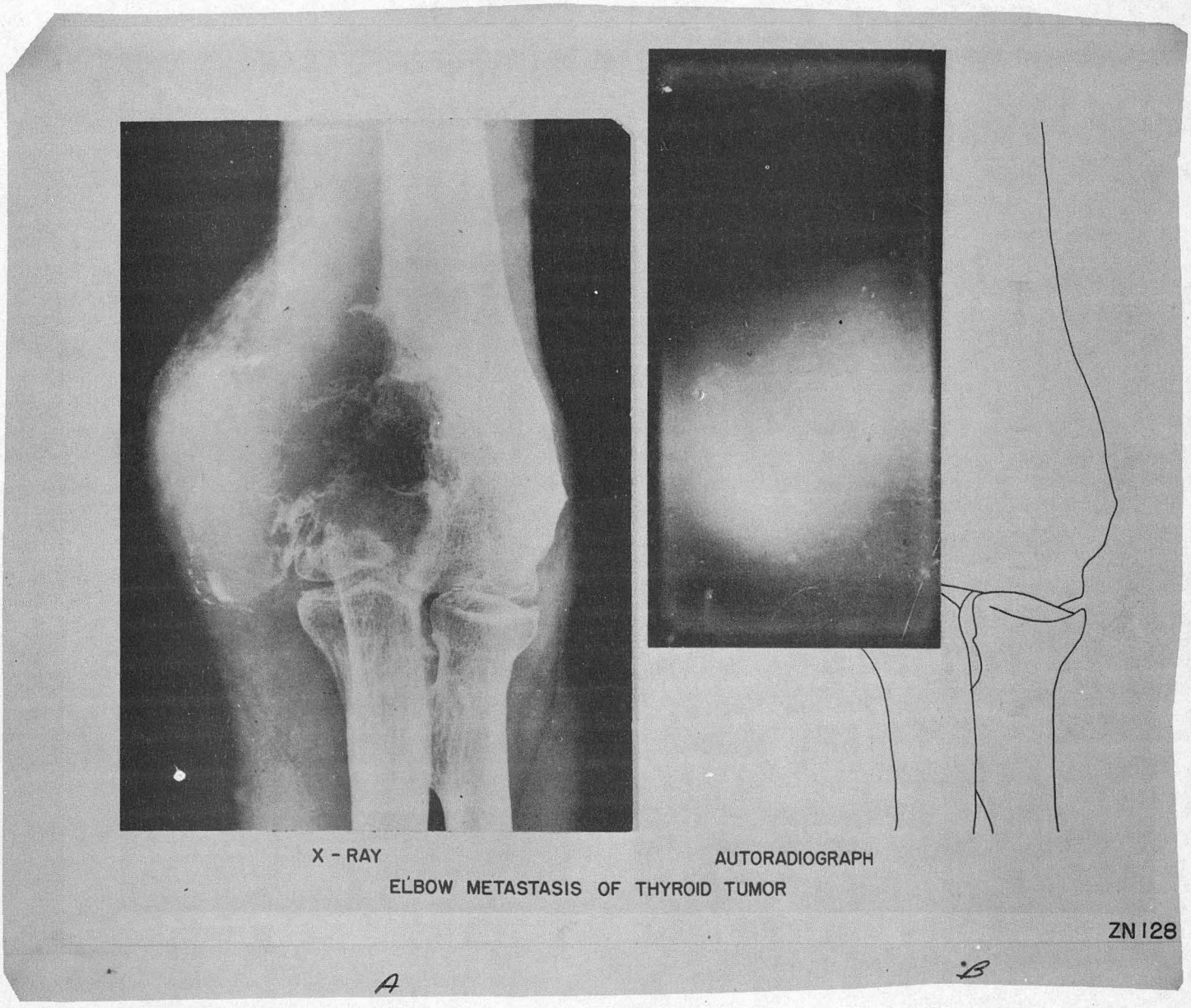
X - RAY
AUTORADIOGRAPH
ELBOW METASTASIS OF THYROID TUMOR
ZN 128
A
B

Fig. 3

APPENDIX

Use of the Gamma Ray Pinhole Camera for Ground Surface Survey

C. A. Tobias

The use of the pinhole camera requires relatively large surface density of radioactivity as apparent from the report attached. This is a serious limitation in radioactive tracer research. On the other hand there are a number of circumstances in warfare where distribution of surface contaminations needs to be evaluated. For example it is important to know the distribution of radioactivity after an atom bomb blast, in radiological warfare and after radiation accidents in reactors, etc. The pinhole camera, even in its present, crude form, seems to be quite suitable for such determinations in areas where the activity level is high enough to endanger the health of personnel. One property of the pinhole camera is that the same exposure is required at the same surface density of radioactivity, regardless of the distance of the pinhole camera from the contaminated surface. It seems feasible to mount a pinhole camera on a truck, 20-30 feet from the ground and in a single picture survey 1000 square feet for dangerous contamination. In 30 minutes a satisfactory image is obtained from 0.5 mc/cm^2 contamination. Mounting the camera at a height of 100-200 feet a much larger segment of the same contaminated area can be surveyed in a similarly short exposure (the camera might be mounted on a helicopter). The use of this method should result in faster and more efficient penetration of active areas by ground crews and better decontamination than using portable detection instruments alone.

Work is in progress to improve the sensitivity of the detection of gamma rays in the pinhole camera by applying as detector multiple proportional and Geiger counters and recording each count received by each counter in neon discharge tubes. Another possibility for obtaining increased sensitivity of recording the image with the utilization of television techniques of image amplification. Technically it would seem feasible to decrease the required exposure time for the same radioactivity by a large factor, possibly a factor of 1,000. If this development is successful gamma and beta radioactive survey procedures could be performed much faster than at present and the usefulness of the pinhole camera method in <u>in-vivo</u> experiments would be increased as well.

The Use of Tritium for Body Water Determination

Theodore C. Prentice, William E. Siri, Nathaniel I. Berlin

Grace Hyde, Ethel E. Joiner

The precise measurement of total body water in man by in-vivo methods is becoming increasingly important as more is learned of the significance of electrolyte and water metabolism in normal and pathologic states. While there is as yet insufficient evidence to suggest that body water per se will prove of significant value in diagnosis and therapy, the investigation of body water appears essential to a fuller understanding of disease states in which normal electrolyte and water balance is altered. Changes in water balance are clearly evident at some stages of many diseases, but only accurate measurement of body water can reveal quantitatively the changes that occur, and particularly in the early stages it is the only way in which a significant change in body water can be demonstrated. Thus far such measurements remain largely laboratory experiments with the bulk of the data obtained from normal subjects. However, with the present improvements in the methods for assaying tritium, either with the ionization chamber or the proportional counter, the study of water metabolism by tracer methods will doubtless be greatly accelerated.

Total body water has been measured by many investigators using four principal methods: (1) post-mortem desiccation of cadavers[1]. (2) balance studies of electrolytes and water[2]. (3) determination of the specific gravity of the whole body in-vivo[3,4] and (4) the volume and distribution of various substances presumed to be limited to and uniformly mixed within the body water. Well documented reviews of the literature have recently appeared.[2,5]

Method (1) has no practical significance in clinical investigation. Method (2) requires painstaking balance experiments and the authors do not claim quantitative accuracy. Method (3), the measurement of whole body specific gravity, has received considerable recent attention. It is based on the premise that the body can be divided into two portions, namely, the fat-free portion, called the lean body mass, and a variable quantity of fat. The lean body mass purportedly maintains a quite constant gross composition, thus contributing a constant known effect to whole body specific gravity. The fat content of the body, on the contrary, varies widely from individual to individual and is the primary factor responsible for the variation of body density. This basic premise has been substantiated by careful work in guinea pigs and rats[3,6]. In large groups of these animals whole body specific gravity was measured and thereafter total body fat was determined gravimetrically. A hyperbolic relationship between specific gravity and body fat was found which agreed closely with the curve predicted from theoretical considerations[7]. The equation for this curve in humans, $\% \text{ fat} = 100 \left(\frac{5.548}{\text{sp.gr.}} - 5.044\right)$, provides a reasonably accurate estimate of total body fat when the specific gravity can be measured. The remaining percentage, after subtracting fat, is regarded as lean body mass. The lean body mass remains essentially constant in composition and, since water

constitutes on the average 73 percent of this fraction, total body water can be estimated more or less directly from the whole body specific gravity: % body water = 0.73 (100 - % fat). The validity of this method in clinical investigation is questioned from two standpoints. First, since all the experimental groundwork was done in guinea pigs and rats, can the results be extrapolated to man? Comparisons in man of total body water as obtained by this method with those obtained using tritium[8] or antipyrine[4] agree closely so that the method appears feasible in normal man. Second, is the method valid for estimating total body water during disease states? Experimental work is lacking on this point, but the marked changes which frequently occur in both the distribution and the amounts of many body constituents during disease, coupled with the dependency of this method on constant composition of the lean body mass, make it highly unlikely that accurate results could be obtained using this method alone.

The most direct, and therefore potentially the most accurate, method of measuring total body water is by the dilution method. Many substances have been tested, but most have proved unsatisfactory because of failure to limit themselves to and distribute themselves equally through-out body water. Ideally, as pointed out by Schloerb et al[9], the determination of total body water should be done using "tracer water" which diffuses rapidly into all the fluid compartments of the body, reaching a stable uniform equilibrium at which its concentration can be measured. The two isotopes of hydrogen, deuterium and tritium, are now readily available for labeling water. Deuterium labeled water has been studied recently as regards its tracer qualities for measuring total body water[9] and for investigating water metabolism in normal man.

The present study was undertaken to develop further the use of tritium for routine body water measurement and to extend the investigation of total body water to a variety of disease states. A method for routine assay of tritium with ionization chamber had already been developed in this Laboratory but there remained several factors of uncertain magnitude directly associated with the use of tritium for in-vivo dilution studies. The more important of these were exchange of tritium with hydrogen in organic constituents of tissue, the possible existence of an isotope effect, and, if the values for total body water in disease states were to have significance, some measure of the variance in normal subjects.

Normal subjects were selected primarily in the middle age range in as much as previous studies that have been reported were made with relatively young, active subjects. It was essential for evaluating the observations in patients to establish the normal variation to be expected in elder age groups and to determine if there existed some correlation between total body water and age.

The reliability of the tritium method, as well as the possible existence of a significant isotope effect were tested by comparison of total body water measured simultaneously with tritium and with antipyrene. The error in water volume introduced by exchange of tritium and hydrogen in protein was ascertained from the tritium activity found in the dried tissues of rabbits after tritium was administered intravenously.

Methods. A total of 55 subjects, including both normal and those with disease states, were used in the present study. Thirty-six of the subjects were patients with cardiac, liver, and blood abnormalities who were examined

at the Highland Alameda County Hospital and in the Donner Laboratory Clinic. Among the normal subjects, 15 who were inmates studied at San Quentin Prison, were in the age range of 34 to 56 years. Four of the five remaining normal subjects were 20 to 25 years of age.

The tritiated water used through-out the study was prepared as a stock solution with a specific activity of approximately 2 mc/cc. One cc of the sterilized stock solution was given intravenously with a tuberculin syringe. The use of tuberculin syringes for this purpose has sometimes been critized on the grounds that they are not sufficiently reliable for delivering an accurately known volume of fluid, particularly when the same syringe is not used through-out a series of injections. This criticism was tested in the present instance by gravimetric determination of the volume of water delivered by tuberculin syringes selected at random. Although the test cannot be regarded as exhaustive, those tested showed a maximum error of no more than 2 percent in the 1.0 cc volume delivered, while the variation in volume delivered from any single syringe did not exceed 0.5 percent.

Following administration of the tritiated water, heparinized blood samples were withdrawn at intervals of 2, 4 and 6 hours. However, at two hours mixing is so complete that if differences in plasma tritium concentration did exist at the later intervals they were within the experimental error; consequently the values of the specific activities of the three samples were averaged. Earlier attempts to obtain samples at 3, 6 and 24 hours with the intention of extrapolating the specific activity to the time of injection were abandoned in view of the long turnover time for water in humans. The plasma was separated by centrifugation, placed in sealed tubes and frozen until analyzed.

The tritium activity was assayed with 100 cc cylindrical ionization chambers which were filled to atmospheric pressure with hydrogen generated from 0.5 cc of plasma sample. Reduction of the water (plus organic constituents of plasma) was effected in vacuo with lithium aluminum hydride dissolved in diethyl "carbitol" as described by Siri[10]. The rate of ionization, or relative specific activity, was recorded with a vibrating reed electrometer and recording potentiometer.

A tritium standard, prepared by diluting a portion of the stock solution by a factor of 20,000, was run in each ionization chamber at frequent intervals. With relative specific activities of the standard and samples, total body water volumes were computed from the simple dilution, i.e., 20 x standard activity/plasma activity = total body water in liters. These are the volumes given in the tables and do not include the small correction for hydrogen exchange discussed later.

For the comparison body water volumes obtained with antipyrene, 45 cc of a sterile 2 percent solution (0.9 gm antipyrene) were given intravenously. Heparinized blood samples were taken at the same time as those for the tritium assay, namely at 2, 4 and 6 hours. Plasma antipyrene levels were determined by the method described by Brodie et al.[11] using a Beckman DU sprectrophotometer. The plasma concentration of antipyrene, in contrast with tritiated water, exhibits a rapid exponential rate of disappearance with an average half time of about 11 hours, consequently the plasma

concentration is necessarily extrapolated back to the time of injection for the correct dilution factor.

The exchange of tritium with hydrogen in tissue solids was determined from the uptake of tritium in a representative selection of organs in rabbits. Each of four rabbits was injected with 0.1 mc of tritium and exsanguinated after three hours. Plasma was assayed directly for tritium while samples of plasma solids, muscle, liver, kidney, G.I. tract, and fat were first dried in vacuo to constant weight before analysis. For tritium assay, the dried solids were oxidized to water in a stream of oxygen in a quartz tube and passed over copper oxide at 850° C.

Evaluation of Errors. Aside from the instrumental and statistical errors to which all radioactive measurements are subject it was of interest to evaluate those factors which a priori would appear to affect accurate measurement of total body water with tritium. Those factos which were considered in detail were changes in plasma tritium concentration which might result from mixing and elimination of body water, possible isotope effect, exchange between tritium and bound hydrogen in tissue solids and, of course, errors in the assay of tritium.

Arterial mixing of tritiated water, investigated in this laboratory by Pace et al[12], reveal that mixing is essentially complete in normal adults by the end of one hour. In the present investigation early venous concentration of tritium was studied serially in two patients with marked ascites in whom mixing might be expected to be greatly altered. However, as shown in Fig. 1, after one hour mixing appears to be complete in both these individuals. This evidence, together with the very slow turnover of water appear to rule out slow mixing components and elimination of water as sources of error when plasma samples are taken a few hours after injection of tritiated water.

In simple dilution methods such as those used here where equilibrium is first established, it is highly unlikely that even the great mass difference between hydrogen and tritium can introduce an isotope effect of any consequence. However, without direct comparison with deuterium this is difficult to demonstrate. The comparison nevertheless could be made indirectly with the results of studies in which antipyrene and deuterium water volumes were investigated. If no isotope effect were present, the ratios (H^3 body water)/(antipyrene body water) and (H^2 body water)/(antipyrene body water) should be equal. This was, in fact, observed on comparing the present tritium - antipyrene body water volumes with the deuterium - antipyrene water volumes reported by Soberman, Brodie et al[13]. At least within the present experimental error this does not appear to be a measurable factor.

Previous investigators have observed a small but relatively constant difference in total body water as measured with deuterium and antipyrene. As indicated above a similar difference with tritium and antipyrene is found in which the tritium dilution volume is a few percent greater than that for antipyrene. This difference appears to be fully accounted for by exchange of tritium with hydrogen which lowers the plasma (water) specific activity. The exchange of tritium in organs of the rabbit

as shown in Table V varied from 6 to 15 percent relative to body water, which agrees closely with that found by Ussing[14] with deuterium. Assuming that exchange of the same order of magnitude takes place in the corresponding tissues of man, a correction factor of about 2 percent can be calculated which is in agreement with estimates of 0.5 percent to 2.0 percent by other investigators[9].

The rabbit data in Table V indicate a difference in lability of hydrogen atoms in various tissue masses of the body. No exchange whatever could be detected in fat. Liver, kidney, and plasma solids show a consistently higher percent exchange than do muscle and G.I. tract this division corresponds more or less with viscera and carcass and no large error is introduced by considering the entire viscera as high activity tissue and carcass generally as representing the less labile tissue. An average value of 64 percent body weight was taken for total carcass and 24 percent for total viscera; 12 percent was considered fat in a "standard man". Since adipose tissue contains little if any water, the true body water should equal 73 percent of the lean body mass. The observed body water is greater than this by the amount of tritium which exchanges in protein (carbohydrates are not considered here because they constitute but a small fraction of the total organic constituents), thus observed body water % = 73 percent + relative activity x percent low activity protein + relative activity x percent high activity protein.

The second term on the right is

$$0.08 \times 0.795 \times 0.27\ (15/2 + 49) = 0.96$$

While the third term is

$$0.13 \times 0.795 \times 0.27 \times 24 = 0.67$$

Where 0.08 and 0.13 are the relative activities for the respective tissue masses, 0.795 is the fraction of protein in dry fat-free tissue found by Pace et al, and 0.27 percent is the fraction of solids in wet tissue. Inserting these values in the formula above, the observed body water percent of the lean body mass is then approximately 74.5. The correction factor representing the maximum error, i.e. for a lean subject is 0.73/0.745 = 0.98. The difference of about 2 percent corresponds closely with the differences in body water volumes observed when antipyrene is compared with tritium or deuterium.

Two facts are worthy of note. First, the magnitude of the error is not changed by the degree of obesity, and second, that in edematous state the error decreases as edema increases. The first is true because adipose tissue does not alter significantly either the amount of exchangeable hydrogen atoms nor the volume of body water. The second is evident because as body water increases the amount of tritium exchanged remains the same.

Discussion. Radiation dosage is always an important consideration in the utilization of radioactive tracers. Two mc of T_2O was selected for use in these studies because it produced a very low radiation dose yet the specific activity of plasma (body water) was greater than background by a factor of

20 - 30, thus enabling shorter counting time and reduced statistical error.

Dosage rate and total dose were calculated for a 70 kilogram man using an average beta particle energy of 6 kilovolts and an exponential disappearance of water with a half-life of 10 days.

The maximum dosage rate that would occur at the time of injection is Dosage Rate = (2) $(3.7 \times 10^7)(6000)(1.64 \times 10^{-12})/(7 \times 10^4) = 0.01$ rep/day where 3.7×10^7 is the number of disintegrations per millicurie sec. and 1.64×10^{-12} is a factor for conversion from electron volts per second to roentgen equivalent physical (rep) per day assuming 84 ergs per rep.

Total dose was calculated by formula

Total Dose = $(0.01)(10)/(0.693) = 0.14$ rep

which represents the integration of the dosage rate from the time of injection to infinity. The radiation dose during the first week is considerably less than the generally accepted tolerance level of 0.3 roentgen per week.

The total body water of the younger normal subjects are in general agreement with those found by previous investigators, both with deuterium and antipyrene. The older subjects in the normal group, i.e., between 34 and 56 years, were found to have somewhat smaller volumes relative to body weight than is usually observed in the late teens and early twenties. This difference is undoubtedly greatly influenced by the difference in physical activity and physical condition of the individuals measured in each age group. Consequently there seems little to be gained in attempting to establish average values for normal subjects or correlation with age unless body fat can be accounted for in each individual measured.

For the same reason, body water determinations in disease states appear to be of little value as a quantitiative measure of water retention or deficiency. Since individuals differ markedly in degree of obesity, the proportion of body water normally present will vary accordingly and thus mask any positive indication of altered water balance. As Steele[15] has already stated, an obese person can develop edema and still have a smaller proportion of body water than a lean, normal individual. This explains the lack of a significant difference in the proportion of body water observed in cardiac patients with and without edema (Table 3).

The more clear cut and striking difference between cirrhotics with and without ascites and edema (Table 2) appears to be explained in large part by sex difference in the two groups. The total body waters of group A, which consists wholly of females, falls within the normal range for females whereas group B, three fourths of whom are males, falls in the normal range for males. Furthermore, because of the nature of the disease, they are more uniformly a lean group by external appearance than are the cardiac patients. The presumably low proportion of fat in cirrhotic patients without edema or ascites as judged by the appearance of leanness is not borne out by calculation of body fat with the formula % body fat = 100 - % $H_2O/0.73$. Their calculated

mean fat content was 40.4 percent which seems surprisingly high.

Little emphasis was placed on the measurement of body water turnover in this investigation because of previous work on this aspect of the problem done by Pinson et al[16]. These investigators, using tritium, found biological half-lives of body water in 8 normal subjects on an ad libitum water intake to range from 9 to 14 days. These values agree closely with those found by Schloerb et al[9] using deuterium. When the water intake of one of these individuals was increased from 2.7 liters/day to 12.8 liters/day, the biological half-life was reduced from 10 days to 2.5 days, illustrating the lability of body water turnover in normal individuals.

The difficulties that confront efforts to interpret body water metabolism in disease states could doubtless be resolved if body fat could be determined at the same time. It seems reasonable that if body water can be expressed relative to lean body mass its significance in disease would be more clearly defined. Although a method now under development for measuring body fat may be applicable to patients, the existing methods are either not sufficiently reliable or they are impractical for use with ill subjects.

Summary

1. Total body water has been determined with tritium oxide in 55 individuals. Twenty were normal and the remainder were suffering from a variety of disease states.

2. Tritium oxide appears to measure the same water volume as deuterium oxide, averaging 2 - 4 percent higher than antipyrene, and undergoes a similar degree of exchange with organic molecules.

3. The difference between antipyrene and tritium body water volumes is accounted for quantitatively by exchange of tritium with protein bound hydrogen.

4. Body water determinations vary greatly from individual to individual, the variations in proportion reflecting for the most part variation in body fat. In pathologic states, where the lean body mass cannot be assumed to remain constant, body water determinations are of limited value without a method for quantitating fat.

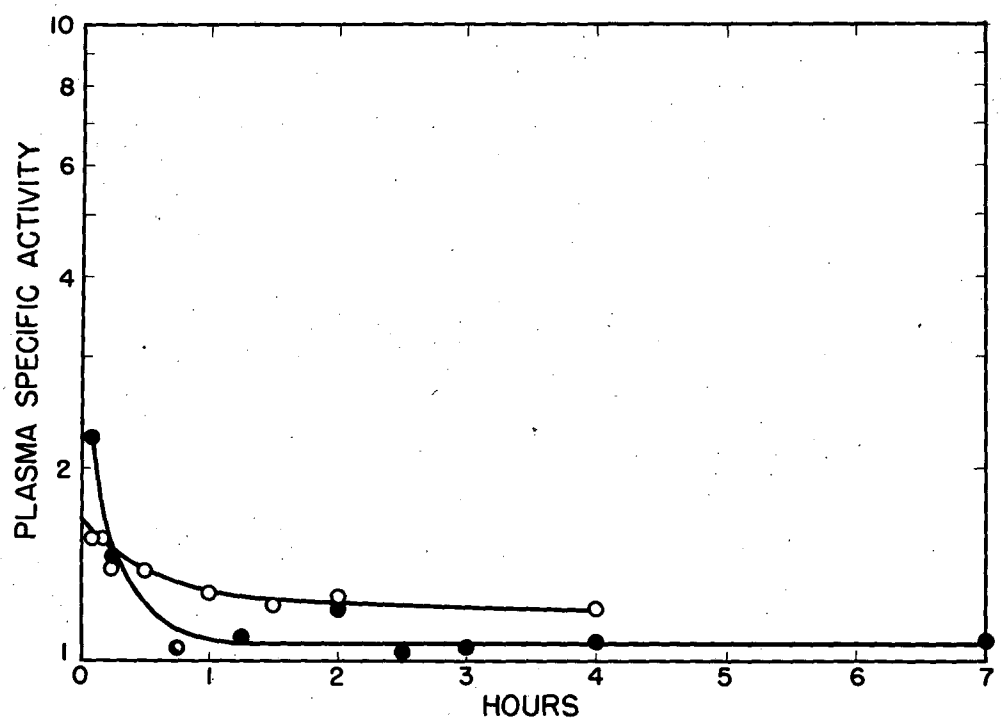

FIGURE I

MU 2712

Table I

TOTAL BODY WATER OF NORMAL SUBJECTS

Patient	Age	Height	Weight Kgm	Body Water Liters	Body Water %	Body Fat %
H	44	5'6"	54.1	29.7	54.7	23.8
M	40	6'	91.4	43.9	48.1	33.0
G	54	5'11"	70.5	35.2	50.0	30.4
S	42	5'10"	91.0	46.8	51.4	28.5
C	38	5'8"	77.8	40.8	52.6	26.6
J	41	5'7"	68.2	38.7	56.7	21.0
C	42	5'8"	84.0	44.4	52.7	26.5
C	47	6'	75.5	38.5	50.6	24.5
S	53	5'7"	59.5	33.9	56.7	21.0
B	34	5'5"	67.5	34.9	51.7	28.0
S	41	4'8"	75.5	37.1	49.1	31.6
G	53	6'1"	88.6	46.9	52.7	26.6
L	45	5'8"	73.1	36.6	49.9	30.6
C	37	5'10"	78.2	44.2	56.5	21.3
G	56	5'11"	86.0	40.6	47.9	33.2
Mean	44.5	5'6"	76.0	39.50	52.5	27.1
S.D.					± 3.0	± 4.2

Table II

TOTAL BODY WATER OF CARDIAC PATIENTS WITH AND WITHOUT FAILURE

Patient	Age	Sex	Weight Kgm	Body Water Liters	Body Water %	Diagnosis
A. Compensated at bed rest:						
M.K.(2)	34	F	46.0	28.0	61.0	H.C.V.D.
B.	47	M	70.4	43.0	61.0	H.C.V.D. with uremia
W.	80	F	60.5	29.6	49.0	A.S.H.D.
C.R.(2)	38	F	54.5	29.8	54.6	H.C.V.D.
Mean	49.8		57.85	36.3	56.4	
S.D.					± 5.8	
B. With peripheral edema:						
B.	45	F	46.8	26.5	56.6	Rheum. ht. disease
C.P.	71	M	59.6	33.6	56.4	A.S.H.D.
A.G.	62	M	73.4	44.0	60.0	H.C.V.D.
M.S.	74	F	78.5	27.6	35.2	H.C.V.D. (very obese little edema)
D.M.	61	F	69.4	34.0	49.0	Cor.Pulmonale
P.D.	47	M	70.0	41.7	59.5	Rh. Ht. Disease
H.M.	44	F	56.7	53.2	65.0	H.C.V.D.
S.W.	40	F	55.5	36.9	66.5	H.C.V.D.
Mean	53.0		62.4	37.0	57.6	
S.D.					± 10.6	

Table II
(cont.)

Patient	Age	Sex	Weight Kgm	Body Water Liters	Body Water %	Diagnosis
C. With pulmonary congestion but no peripheral edema:						
J.R.	59	F	82.0	34.4	42.0	A.S.H.D. Emphysema
F.C.	74	M	102.3	35.4	34.6	Myocardial infarct.
M.K.	34	F	51.7	35.2	68.0	H.C.V.D.
M.G.	53	F	61.4	27.5	44.8	H.C.V.D.
Mean	55		74.4	33.2	47.5	
S.D.					± 14.3	

Table III

TOTAL BODY WATER OF PATIENTS WITH PORTAL CIRRHOSIS

Patient	Age	Sex	Weight Kgm	Body Water Liters	Body Water %	Diagonsis
A. Without ascites or edema:						
S.S.	70	F	52.0	19.4	37.3	
E.K.	33	F	45.6	21.5	47.2	
M.B.	61	F	53.2	21.1	39.7	
A.P.	30	F	81.8	30.9	50.0	
Mean	48.5		53.2	23.2	43.5	
S.D.					± 6.0	
B. With ascites and/or edema:						
M.H.	36	F	71.9	37.8	52.6	edema
A.B.	60	M	52.4	31.8	60.7	ascites
M.T.	65	F	80.7	59.0	63.0	ascites and anasarca
H.M.	51	M	49.6	26.6	53.7	ascites
J.E.	47	M	71.3	40.2	56.4	ascites and edema
J.E.	54	M	59.5	31.5	53.0	ascites
W.D.	60	M	58.1	30.4	52.3	ascites
Mean	53.3		63.3	35.6	55.9	
S.D.					± 4.3	

Table IV

COMPARISON OF TOTAL BODY WATER OBTAINED WITH TRITIUM AND ANTIPYRINE IN PATIENTS AND NORMALS

Patient	Age	Sex	H^3 Body Water Liters	H^3 Body Water %	Antip. Body Water Liters	Anti-pyrine %	Diagnosis
P.	64	M	35.2	55.3	33.1	52.0	Poly. Vera
L.Y.	66	F	26.8	50.0	25.3	47.2	Poly. Vera
T.F.	63	M	40.6	67.1	39.4	65.2	Poly. Vera
B.L.	76	M	35.6	51.0	33.7	48.4	Poly. Vera
S.	59	F	30.0	50.0	29.0	48.4	Lymph. Leuk.
B.A.	63	M	49.6	65.1	48.8	64.1	Lymph. Leuk.
T.C.	40	M	47.6	65.7	50.0	68.9	Myel. Leuk.
D.A.	63	M	44.04	48.8	42.6	46.8	Sec. Poly.
M.B.	46	F	28.2	59.6	26.5	56.1	Congest. Fail.
B.	50	F	20.2	49.3	20.1	48.8	Cirrhosis
Mean	59.0		35.8	56.2	34.8	54.6	
S.D.				± 7.5		± 8.7	
Normal comparisons							
J.M.	22	M	41.5	60.5	39.4	57.4	Normal
R.N.	25	M	43.4	57.5	39.5	52.4	Normal
P.K.	22	M	55.0	60.4	51.2	56.2	Normal
R.C.	20	M	48.6	63.0	47.4	61.4	Normal
C.G.	55	M	40.6	53.3	40.5	53.1	Normal
Mean	28.9		45.8	58.9	43.6	56.1	
S.D.				± 3.7		± 3.6	

Table V

EXCHANGE OF TRITIUM IN TISSUES RELATIVE TO BODY WATER

Organ	Rabbit I	Rabbit II	Rabbit III	Rabbit IV
Plasma	100.0	100.0	100.0	100.0
Liver	14.0	10.0	15.4	
Kidney	13.4	8.9	13.6	
G.I. Tract	8.0	7.5	11.8	
Muscle	8.0	5.9	11.8	
Plasma Solids	15.4	15.0		15.2
Fat	-	-	0	-

All specific activities are normalized to 100 percent for plasma.

Except for plasma all tissues were first dried to constant weight.

References

1. Mitchell, H.H., Hamilton, T.S., Steggerda, F.R. and Bean H.W. The Chemical Composition of the Adult Human Body and its bearing on the Biochemistry of Growth. Jour. Bio. Chem. 1945, 158, 625.

2. Lavietes, P.H., D'Esopo, L.M., and Harrison, H.E. The Water and Bare Balance of the Body. Jour. Cl.Invest. 1935, 14, 251.

3. Rathbun, E. and Pace, N. Studies on Body Composition. I J.B.C. 158, 667, 1945.

4. Osserman, E.F., Pitts, G.C., Welham, W.C. & Behnke, A.R. In Vivo Measurement of Body Fat and Body Water in a Group of Normal Men Journal of Applied Physiology 2, 633, 1950.

5. Levett, M.F. and Gaudino M. Measurement of Body Water Compartments. American Journal of Medicine 9, 208, 1950.

6. Da Costa, E. and Clayton, R. Medical Nutrition Laboratory, Report No. 62, September 1949.

7. Morales, M.F. Rathbun, E., Smith R.E., & Pace, N. Studies on Body Composition II. Journal Biological Chemistry 158, 677, 1945.

8. Pace, N., Kline, L., Shachman, H.K., and Harfenist, M. Studies on Body Composition IV. Journal Biol. Chem., 168, 459, 1947.

9. Schloerb, P.R., Freis - Hansen, B.J., Edelman, I.S., Soloman, A.K. and Moore, F.D., The Measurement of Total Body Water in the Human Subject by Deuterium Oxide Dilution. J. Clin. Investig. 29, 1296, 1950.

10. Siri, W. To be published.

11. Brodie, B.M., Axelrod, J., Soberman, R. and Levy, B. The Estimation of Antipyrene in Biological Materials. Jour. Biol Chem 179, 25, 1949.

12. Pace, N. et al. Unpublished Data.

13. Soberman, B.M., Brodie et al. The Use of Antipyrene in the Measurement of Total Body Water in Man. Jour. Biol. Chem. 173, 31, 1949.

14. Ussing, H.H. The Exchange of H and D atoms between Water and Protein in Vivo and in Vitro. Skandinavisches Archiv. Fiir Physiologie 78, 225, 1938.

15. Steele, J., Murray, Berger, Eugene Y., Dunning, Marcella F., Brodie, Bernard B., Total Body Water in Man. Amer. Jour. of Phys. 62, No. 2, Aug. 1950, page 313.

16. Pinson, E.A. & Anderson, E.C., The Body Absorption, Distribution and Excretion of Tritium in Man and Animals, Atomic Energy Commission Report LA-1218 March 12, 1951.

III HEALTH CHEMISTRY AND PHYSICS

Health Chemistry

N. Garden

Health Chemistry Section.

Equipment and gloved boxes for safely processing radioactive materials have been supplied as usual. Monitoring, waste handling and storage facilities, and decontamination services have continued. New developments include equipment and box for washing 60-inch cyclotron target assemblies containing a uranium-graphite column for work done by North American Aviation Company. A design for vacuum distillation of carbon 14 was made. Hot and cold bath units for use in gloved boxes (made as models for general shop reproduction), gloved box microscope front model (also for shop reproduction), capper control for serum bottles to contain yttrium preparations, a redesign of the chain drive manipulator used in the two-inch lead boxes for beta-gamma work, and additional lead glass windows for the lead boxes have been developed. An improved glove port for the Berkeley Boxes was made. This design further increases the safety during change of gloves.

Equipment Development Group.

The drawing file of items developed has been brought up to date. An illustrated catalog of equipment was prepared. Requests for prints by other projects have greatly increased of late.

Monitoring Group.

Material from the Bikini tests has been checked for radioactive contamination. About a dozen twenty-inch diameter diffusion pumps from Oak Ridge have been received, monitored and decontaminated. The new cooling water system for use in the 60-inch cyclotron bombardments of large quantities of heavy alpha emitters is being successfully used. This cooling water is periodically sampled, plated and counted by the monitors during a bombardment.

Decontamination and Active Waste.

Studies on special processes for solidification and purification of liquid waste are in progress. A manual on decontamination practices at the Radiation Laboratory is being compiled. A study is continuously being made of the corrosion resistance of various commercial surfaces as they appear on the market as to their adaptability for future use. Dollys for more efficiency and ease in decontaminating the radioactive glassware have been designed and are being used.

Airborne Activity Control Group.

Two manifold installations for transporting the filtered exhaust air from a number of gloved boxes in one room to the outside atmosphere through one duct have been designed and installed. Exhaust facilities for a modified decontamination chamber, now under construction, were designed and are being fabricated.

This group, in addition to controlling radioactivity in the air, is continuing to expand its mercury vapor surveys as the use of this material increases. The investigation of beryllium used is continuing. Consulting services were afforded in this field to California Research and Development Corporation air cleaning programs, hood designs and associated ventilation problems. Three new mercury "sniffers" are being built along the lines of a prototype, which has been used with considerable success recently.

To decrease costs of transporation of weekly shipments of 15 mc of Na^{24} from Oak Ridge via the fastest air service, two containers with uranium as the shielding material have been made and dispatched to Oak Ridge for subsequent shipments. The decrease in weight afforded by these new containers will be at least 140 lb.

Health Physics

B. J. Moyer

Additional Shielding in Building 10. A wall of light weight concrete 18" thick and 7' 10" high was installed along the north side of the Linear Accelerator. It is equivalent to 1' of heavy concrete and reduces the x-ray intensity in the shop area by about a factor of ten. The general x-ray level in the shop area during full intensity operation is about 4 mr/hr.

Neutron Survey Instrument. In the interests of achieving greater portability a new high voltage supply has been devised and placed in satisfactory operation in the portable fast neutron survey meter. The counting element itself is the polyethylene lined proportional counter to which provious reference has been made, and the amplifying and metering circuit consist of the same one shot multi-vibrator arrangement which has been described previously. The new high voltage supply employs a vibrator and step-up coil with a cold-cathode rectifier firing across a series of neon bulbs and thus delivering 2100 volts regulated output. A large condenser connected to the counter is charged to this voltage and the vibrator is turned off. The leakage rate at 95% relative humidity is less than one volt per minute which makes recharging necessary only about every 15 minutes. The entire weight of the high voltage supply including a three volt battery is approximately two pounds.

Work is also progressing with promising results on a proton recoil scintillation counter for neutron survey work. In this device a thin spherical shell of polyethylene is lightly coated on the inside surface with a silver-activated zinc sulfide phosphor, and this surface is then viewed by a 5819 photomultiplier which looks into the sphere through a hole in its wall. A limiter circuit is useful in the output of the photo-multiplier because of the wide variety in pulse heights from the recoil protons but there is a large difference existing between most of the proton pulses and the smaller effects due to gamma rays. The spherical shape is of course desirable to achieve non-directionality in the function of a survey instrument.

Statistical Summary of Monitoring Program.

Survey instruments maintained:

1.	B- γ ionization chamber	38
2.	Victoreen 263-meters	19
3.	I.D.L. portable survey meters	20
4.	Cutie pies	3
5.	Recording γ - intensity meters	16
6.	Victoreen proteximeters	3
7.	Fast neutron proportional counters	5
8.	Slow neutron proportional counters	15
9.	Balanced chamber (slow neutron survey instrument)	2
10.	Balanced chamber (fast neutron survey instrument)	1
11.	Special tissue wall survey instrument	1
12.	Fast neutron proportional counter (portable)	1

Personnel meters in use:

1.	Total people covered with film badges	1885
2.	Total man days coverage with pocket chambers	840
3.	Total man days coverage with pocket dosimeters	3590
4.	Total man days coverage with pocket chambers (SN)	2095

Cases of weekly exposures above .3r:

Weekly film exposure above	184" area	60" area	Linear Accelerator	Chemistry	Other	Total
.3r	1	16	27	2	4	50
.5r	1	4	10	0	2	17
1.0r	0	2	0	1	0	3
1.5r	0	0	1	2	3	6

ewj/11-12-51
Information Div.

CONFIDENTIAL

DECLASSIFIED

DECLASSIFIED

CONFIDENTIAL