UCRL-16015

University of California

Ernest O. Lawrence Radiation Laboratory

TWO-WEEK LOAN COPY

This is a Library Circulating Copy which may be borrowed for two weeks. For a personal retention copy, call Tech. Info. Division, Ext. 5545

DEVELOPMENT OF SOME HIGH-SPEED CHROMATOGRAPHIC METHODS

Berkeley, California

DISCLAIMER

This document was prepared as an account of work sponsored by the United States Government. While this document is believed to contain correct information, neither the United States Government nor any agency thereof, nor the Regents of the University of California, nor any of their employees, makes any warranty, express or implied, or assumes any legal responsibility for the accuracy, completeness, or usefulness of any information, apparatus, product, or process disclosed, or represents that its use would not infringe privately owned rights. Reference herein to any specific commercial product, process, or service by its trade name, trademark, manufacturer, or otherwise, does not necessarily constitute or imply its endorsement, recommendation, or favoring by the United States Government or any agency thereof, or the Regents of the University of California. The views and opinions of authors expressed herein do not necessarily state or reflect those of the United States Government or any agency thereof or the Regents of the University of California.

UCRL-16015

UNIVERSITY OF CALIFORNIA

Lawrence Radiation Laboratory
Berkeley, California

AEC Contract No. W-7405-eng-48

DEVELOPMENT OF SOME HIGH-SPEED CHROMATOGRAPHIC METHODS

Sergio Ajuria-Garza
(M.S.Thesis)

June 8, 1965

DEVELOPMENT OF SOME HIGH-SPEED CHROMATOGRAPHIC METHODS

Contents

Abstract v

I. Introduction 1

II. Thin-Layer Chromatography on Ion Exchange Resins

A. Introductory Remarks 3

B. Preparation of the Resin Layer 3

C. Storage of the Plates 4

D. Application of the Sample 7

E. Test Sample 7

F. Development of the Chromatograms 9

G. Removal of the Spots 9

H. Effect of Bead Size and Degree of Crosslinkage 12

III. Centrifugal Acceleration of Thin-Layer Chromatography

A. Introductory Remarks 15

B. Preliminary Experiments: Mechanical Stability of the Adsorbent Layers 15

C. Centrifugal Thin-Layer Chromatography on 5.0 × 30.0 cm glass plates 18

D. Method of Operation 20

E. Testing of the Apparatus 22

F. Advantages and Disadvantages of the Cylindrical Chambers 22

IV. A Universal Chromatographic Chamber 23

V. Flow Rate of the Solvent Through the Stationary Phase

A. Introductory Remarks 29

B. Factors Affecting the Rate of Flow 29

C. Comparison of the Rates of Progress of the Solvent Front in Horizontal, Ascending, Descending and Centrifugal TLC 30

D. Flow Rate and Equilibrium 40

E. Flow Rate Per Unit Area of Cross Section in Descending TLC and in Centrifugal TLC 41

F. Theoretical Considerations on the Influence of Solvent Flow on the R_f Values 43

VI. Tandem Chromatography 46

VII. Applications

A. Separation of Zr^{95} and Hf^{181} 49

B. Separation of Zr^{95} and Nb^{95} 49

C. Separation of Am^{241} and Cm^{244} 52

VIII. Evaluation of Radiochromatograms 55

IX. Conclusions 59

Acknowledgments 60

Footnotes and References 61

DEVELOPMENT OF SOME HIGH-SPEED CHROMATOGRAPHIC METHODS

Sergio Ajuria-Garza

Lawrence Radiation Laboratory
University of California
Berkeley, California

ABSTRACT

A thin-layer chromatography method has been developed using as stationary phase a fine mesh ion exchange resin without any admixture, thus eliminating the effects due to binding materials. The plates can be developed by the ascending, descending, horizontal or centrifugal technique. The spots obtained can be removed mechanically by several methods. An apparatus and a method of operation were developed for the centrifugal acceleration of thin-layer chromatography on 5 ×30 cm glass plates with a substantial reduction in the time of development.

A universal chromatographic chamber equally suitable for horizontal, centrifugal, ascending or descending chromatography either of paper strips or thin-layer plates is described in detail. A comparison was made of the rate of progress of the solvent front in the different chromatographic methods. The speed of the front decreases sharply as the distance from the origin increases except in the centrifugal case in which the speed remains constant.

A method of tandem horizontal or centrifugal chromatography is described which permits to increase the length of a chromatogram in order to separate two substances with very similar R_f values. The length of the chromatogram is only limited by the diffusion of the spots.

The above methods are applied to the separation of Zr^{95}-Hf^{181}, Zr^{95}-Nb^{95} and Am^{241}-Cm^{244}. The radiochromatograms were evaluated by direct scanning and autoradiography. These methods are also discussed.

I. INTRODUCTION

Thin-layer chromatography methods are characterized by their high sensitivity, excellent sharpness of separation and high speed[1] and because of this they now enjoy widespread use. Many special methods and techniques have been developed[2] to further enhance these inherent advantages.

The purpose of this work is to describe the development and application of three such new methods:

a. the use of ion exchange resins without any admixture as stationary phase, which eliminates the effects caused by the presence of binding materials and permits the application of thin-layer chromatography to a wider range of separations,

b. the use of a centrifugal field to accelerate thin-layer chromatographic separations, which further increases the speed of the method, and,

c. a method of tandem horizontal or centrifugal chromatography which permits to increase the length of a chromatogram in order to separate two substances with very similar R_f values and which cannot be separated in shorter plates.

In the course of this investigation a universal chromatographic chamber was designed which is equally suitable for horizontal, centrifugal, ascending or descending chromatography using either paper strips or thin-layer plates. This universal chamber is described in detail and it is also used to compare the rates of progress of the different types of chromatography under similar conditions.

The application of these methods is illustrated by the separation of Zr^{95}-Hf^{181}, Zr^{95}-Nb^{95} and Am^{241}-Cm^{244}. The radiochromatograms obtained were evaluated by manual scanning and by autoradiography. A discussion of these methods is also included.

Although from a rigorous point of view paper chromatography can be regarded as a particular case of thin-layer chromatography we will

follow the traditional nomenclature which differentiates between both and we will define:

a. paper chromatography as that in which paper is the stationary phase or the support for the stationary phase, and

b. thin-layer chromatography as that in which the stationary phase or the support for the stationary phase is a finely divided solid applied as a thin layer on a rigid surface which acts as mechanical support.

The two methods are operationally different and this justifies the use of the traditional nomenclature.

II. THIN-LAYER CHROMATOGRAPHY ON ION EXCHANGE RESINS

A. Introductory Remarks

Several ion exchange materials, such as cellulose ion exchangers[3,4] and powdered ion exchange resins,[5] have been used as stationary phases for thin-layer chromatography. Berger et al.[6] have used ion exchange resins mixed with cellulose powder, and Lowenhaupt[7] independently suggested that fine-mesh ion exchange resins could be used for this purpose.

The cellulose in the ion exchange papers and the binders used in TLC plates affect the process of separation[6,8] because they give rise to nonionic adsorption and partition phenomena and they reduce the capacity of the stationary phase.

Thus it was desirable to develop a TLC method using as stationary phase ion exchange resins without any admixture.

Preliminary experiments using Bio-Rad (Dowex) AG 1-X8 ion exchange resin revealed that satisfactory thin layers can be prepared using beads with a (dry) diameter of 150 microns or less, i.e., 100 mesh or smaller.

B. Preparation of the Resin Layer

A slurry is made by mixing 10 g of the ion exchange resin (as supplied by the manufacturer, with about 25% of water by weight) and 10 ml of distilled water and stirring with a glass rod. This yields a volume of about 20 ml of slurry which is enough to cover six plates 5 × 20 cm with a 100 micron layer of resin. The slurry is spread in the usual way[9] over glass plates previously cleansed and degreased by treatment with a detergent and rinsed with distilled water. The plates are kept in a horizontal position to avoid any displacement of the layer when still fluid and they must not be moved until the surface becomes mat, about 15 minutes after the layer has been spread. The edges of the layer are scraped as usual either with a spatula or with a Teflon scraper cut

from a 1/8" Teflon plate (Fig. 1). The plates should be scraped between 15 and 25 minutes after the surface becomes mat because the resin layer is too fluid immediately after being prepared and it will be too dry for proper scraping after more than 25 minutes. The drying process can be accelerated by heating with an infrared lamp, but care must be exercised to avoid complete drying since this will damage the layer as explained in the next section.

C. Storage of the Plates

When the plates are allowed to dry at room temperature and humidity (23°C and 42% relative humidity) the resin layer cracks because the beads decrease in volume upon drying. Berger *et al.*[6] obviate this difficulty by mixing the resin with cellulose powder to stabilize the layer. This however introduces an impurity and lowers the capacity of the plate.

An alternate solution to this problem is to store the plates in an atmosphere saturated or nearly saturated with water vapor. A simple humid storage chamber can be improvised by placing a wire rack and a wet sponge inside a plastic bag which is hermetically closed by folding the open end and clamping it with spring clips.

A more convenient storage chamber consists of a Lucite rack with the outer walls covered with cellulose sponge moistened with distilled water (Fig. 2) and similarly placed inside a plastic bag. Two lucite strips, one in the front and one in the rear, prevent the plates from sliding out accidentally. The front strip is hinged to allow loading and unloading the plates.

The plates can be stored almost indefinitely in this fashion. Two plates were stored for a period of four months in a humid chamber without any deterioration.

The plates can remain outside the humid chamber for a few minutes without cracking and they can be spotted and transferred to the

MU-35368

Fig. 1. TLC plate scraper.

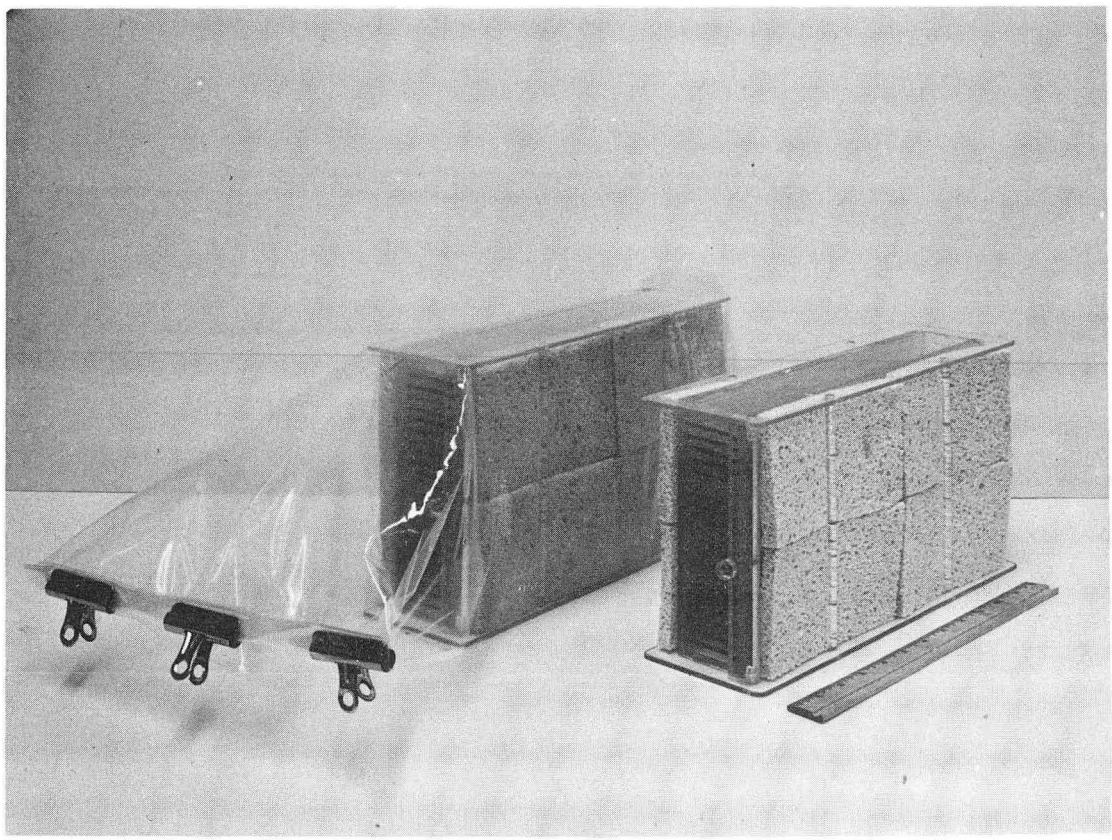

ZN-5048

Fig. 2. Humid storage chamber and rack.

chromatographic chambers without any damage. It is advisable however to perform these operations in as little time as possible and all the necessary items should be prepared beforehand to avoid undue delays.

D. Application of the Sample

The sample solution is applied from a micropipette (1-2λ) at a line 3 cm from the edge of the plate. It has been found that the resolution of the chromatogram is improved if the initial spot is collimated by placing it between two lines carefully marked in the adsorbent layer with a scalpel (Fig. 3).

When an extremely small initial spot is desired this can be obtained by absorbing the sample in a single resin bead (20-50 mesh) and implanting it in the resin layer with micro dissecting forceps.

Several spots can be applied in the same chromatogram after dividing it by straight lines drawn in the direction of flow.

For preparative purposes it is also possible to apply the sample as a wide starting band.[10]

E. Test Sample

The sample used in this and in subsequent experiments for test purposes was a mixture of 2% methyl red and 2% methylene blue in aqueous solution (percentages by weight). The mobile phase was distilled water and the R_f values obtained were zero for methyl red and one for methylene blue.

The advantage of using this mixture as a test sample is that the origin and the solvent front can be seen at all times and the progress of the front can be easily measured.

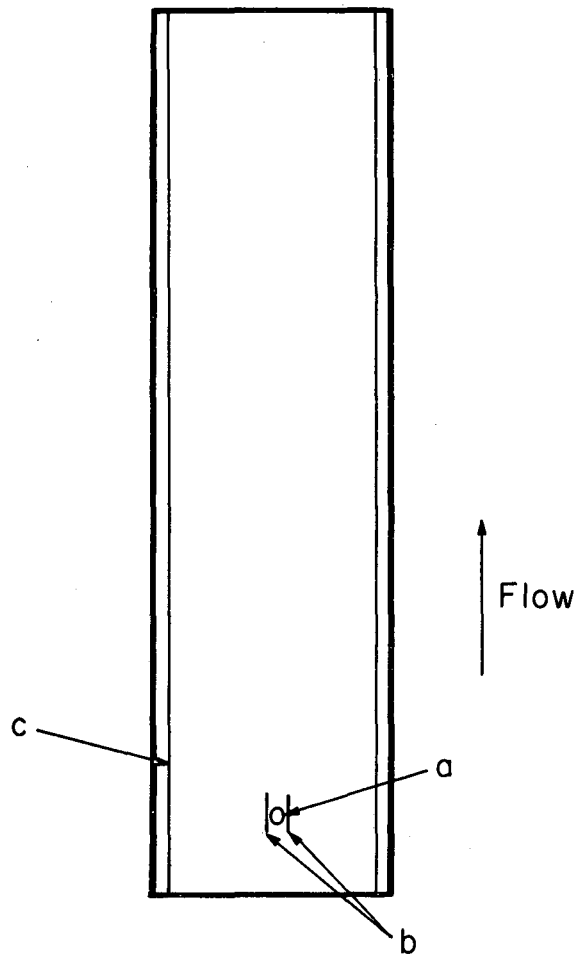

MU-35369

Fig. 3. Collimation of the spot on a TLC plate: a. spot (sample) b. collimating lines c. edge of the thin layer.

F. Development of the Chromatograms

The chromatograms can be developed by the ascending, descending or horizontal technique using any of the conventional apparatuses described in the literature.[2] The particular apparatuses used in this study are described below:

For ascending development the chromatographic plate (or chromatoplate) was placed in a 1 liter graduate cylinder filled with the appropriate solvent to a height of about 1 cm and covered with either the top or the bottom of a Petri dish.

For descending development the chromatoplate was placed in a 3 liter beaker covered with a crystallization pan (190 × 100 mm). The solvent feeding system consisted of a 100 ml beaker secured with tape to the lip of the 3 liter beaker (Fig. 4) and a strip of Whatman No. 1 filter paper, size 10 × 5 cm, inserted in the solvent tank and laid on the adsorbent layer.

For horizontal development the plate was laid on top of two Petri dishes and the solvent was fed from a third Petri dish through a strip of Whatman No. 1 filter paper, size 10 × 5 cm. The assembly was covered with a glass jar (Fig. 5). The chromatoplate can alternately be covered with a second glass plate of identical shape and dimensions, held above the resin layer by two plastic spacers.

G. Removal of the Spots

After development of the chromatogram the spots containing the separated substances can be removed mechanically by several methods:

a. washing with a fine stream of solvent, using a wash bottle. The resin containing the substance of interest is collected in a glass cone

b. scraping with a spatula, again collecting the resin in a glass cone

c. removing single beads from the resin layer with micro dissecting forceps and the aid of a microscope.

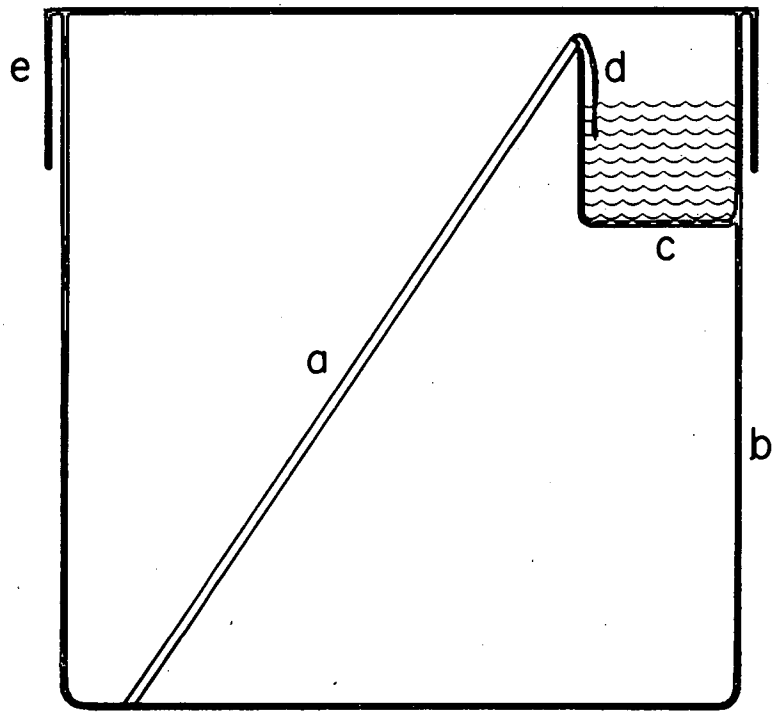

MU-35370

Fig. 4. Descending thin-layer chromatography apparatus:
a. chromatoplate b. 3 liter beaker c. 100 ml beaker
d. strip of filter paper e. crystallization pan
(150 100 mm).

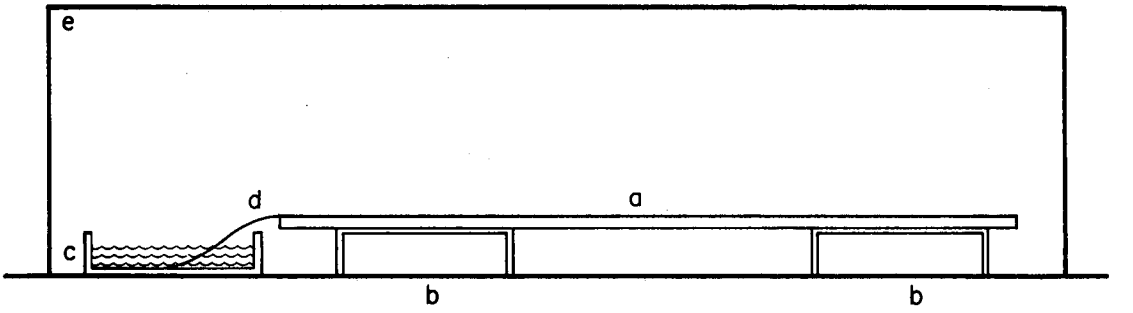

MU-35371

Fig. 5. Horizontal thin-layer chromatography apparatus
a. chromatoplate b. Petri dishes (inverted) c. Petri dish (solvent feeding tank) d. strip of filter paper e. glass jar.

When the substances of interest are radioactive and it is only desired to measure their activity or to obtain beta or gamma spectra the resin beads can be adhered to a piece of colorless adhesive tape (Scotch tape) and removed from the plate. The adhesive tape is cut in the form of a rectangle with an area slightly larger than that of the spot. A small margin is allowed to permit handling the tape with tweezers. The tape is pressed against the layer with a glass rod with a flattened end (Fig. 6). The beads are then removed and another piece of tape can be used to seal them completely and prevent them from falling accidentally.

H. Effect of Bead Size and Degree of Crosslinkage

Since the ion exchange resins are available in various particle sizes and degrees of crosslinkage it is interesting to consider what effects these variables will have on the chromatographic separation.

The size of the particles affects mainly the drying characteristics of the layer; as the particle size decreases the drying time decreases also (Table I). The capillary properties, i.e., the rate at which the solvent flows across the layer by capillary action, do not seem to be influenced very greatly by the size of the beads. The spots, however, are more sharply defined in the layers with smaller beads.

Table I. Approximate drying times (to cracking) of freshly prepared ion exchange resin layers at 23°C and 42% relative humidity.

Mesh size	Time (min.)
50-100	120
100-200	90
200-400	60
minus 400	30

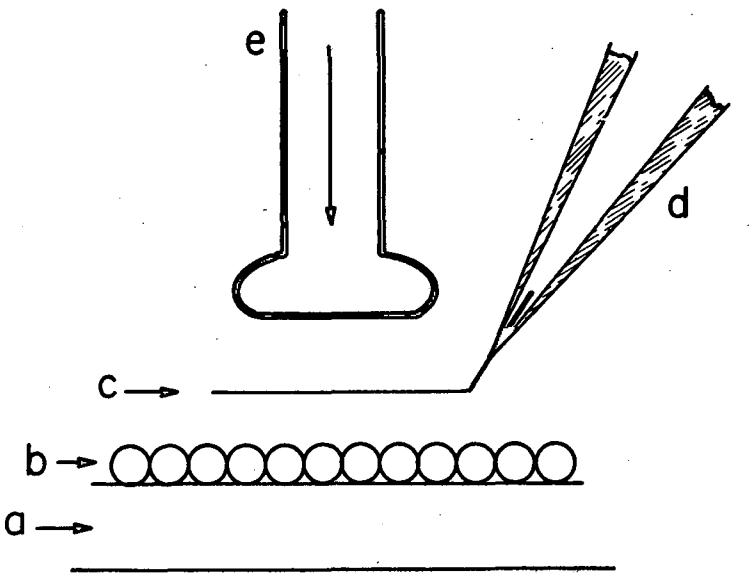

MU-35372

Fig. 6. Removal of a spot by the adhesive tape method: a. glass plate b. thin layer of resin beads c. piece of colorless adhesive tape d. tweezers e. glass rod with flattened end.

The degree of crosslinkage affects the process in several ways. As the crosslinkage increases there is a decrease in the moisture content of the beads and in the dry weight capacity (capacity per unit weight of dry resin). But the swelling factor

$$s_f = \frac{\text{diameter of swollen (wet) beads}}{\text{diameter of dry beads}}$$

decreases also and the wet volume capacity (capacity per unit volume of wet resin) is therefore increased.[11] Thus the increase in crosslinkage decreases the tendency of the layer to crack and increases the capacity of the layer for a given area and thickness.

These considerations indicate that the most suitable resins for thin layer chromatography (TLC) will generally be those with small particle size and high degree of crosslinkage.

The degree of crosslinkage however, influences also the equilibrium between ions,[17] and in order to attain equilibrium or near-equilibrium conditions it is necessary to reduce the rate of flow of the solvent (Cf. Sec. V) as the crosslinkage increases. This limitation must then be borne in mind when choosing the particular resin to be used in a given experiment.

III. CENTRIFUGAL ACCELERATION OF THIN-LAYER CHROMATOGRAPHY

A. Introductory Remarks

The use of centrifugal force to accelerate paper chromatography has been extensively developed and applied in the last few years.[12] The success of this method suggests that it could also be used to further enhance the inherent advantages of thin-layer chromatography.

Rosmus et al.[12] have developed a centrifugal TLC method using silica gel spread on an aluminum disc. While yielding good separations in a short time this method has the disadvantage common to all circular chromatograms that it produces arc-shaped patterns, the size of the arc being proportional to the R_f of the substance.[13] This renders the circular technique unsuitable for quantitative determinations.

It was interesting therefore to develop a centrifugal TLC method using standard rectangular glass plates.

B. Preliminary Experiments: Mechanical Stability of the Adsorbent Layers

To establish the feasibility of the method it was necessary to determine the mechanical stability of the adsorbent layers under centrifugation. For this purpose the adsorbents were applied to ordinary microscope slides, 26 × 76 mm, and centrifuged. During the process of chromatographic separation one part of the adsorbent layer is wet with solvent and the rest is dry. Therefore, stability tests were carried out for both dry and wet adsorbent layers.

The dry chromatographic plates were placed in polyethylene test tubes (100 × 30 mm) and centrifuged at various speeds in a clinical centrifuge* calibrated with a portable tachometer.† The same procedure

---

*International Clinical Centrifuge Model CL, Head No. 211 (International Equipment Company)

†Jones Multiple Range Hand (Portable) Tachometer-Continuous Indicating Navy Spec. 18T22, Type B, Class A

was used for the wet chromatographic plates but these were fitted with a solvent feeding system which consists of a strip of filter paper (Whatman No. 1) 40 × 25 mm held firmly against the adsorbent layer by means of a Lucite rectangle 8 × 25 mm. The solvent reservoir is the paper itself folded several times in an accordion-like fashion (Fig. 7). This assembly is secured to the chromatoplate by two pieces of adhesive tape. The solvent is loaded holding the slide vertically with the filter paper in the lower end and soaking it with solvent by means of a syringe.

Three different adsorbents were studied: Bio-Rad (Dowex) AG 1-X8, minus 400 mesh ion exchange resin, Adsorbosil-1 (silica gel with 10% $CaSO_4$) and Adsorbosil-2 (silica gel without binder). The resin layers were prepared as described in Sec. II. B and the silica gel layers were prepared by the standard procedure.[9]

The critical speed, i.e., the speed at which the adsorbent layer breaks up, was measured for each adsorbent in the dry and wet conditions. In the case of the resin layer the term "dry" is used for the layer with 25% water by weight, since a smaller moisture content renders the plate unusable. The results (Table II) show that the wet layer is less stable than the dry layer. Failure occurs by different processes in each case. In the dry layers relatively large sections of adsorbent are dislodged from the plate whereas the wet layers are washed away by the solvent.

The stability of the layer depends also on its thickness and on the particle size of the adsorbent; it decreases as the thickness and the particle size increase.

Table II. Critical speeds (in rpm) of various adsorbent layers. (Wet and dry conditions; thickness = 100 microns.)

Adsorbent	Wet layer	Dry layer
Dowex-1	980	1600
Adsorbosil-1	1140	2300
Adsorbosil-2	1140	2300

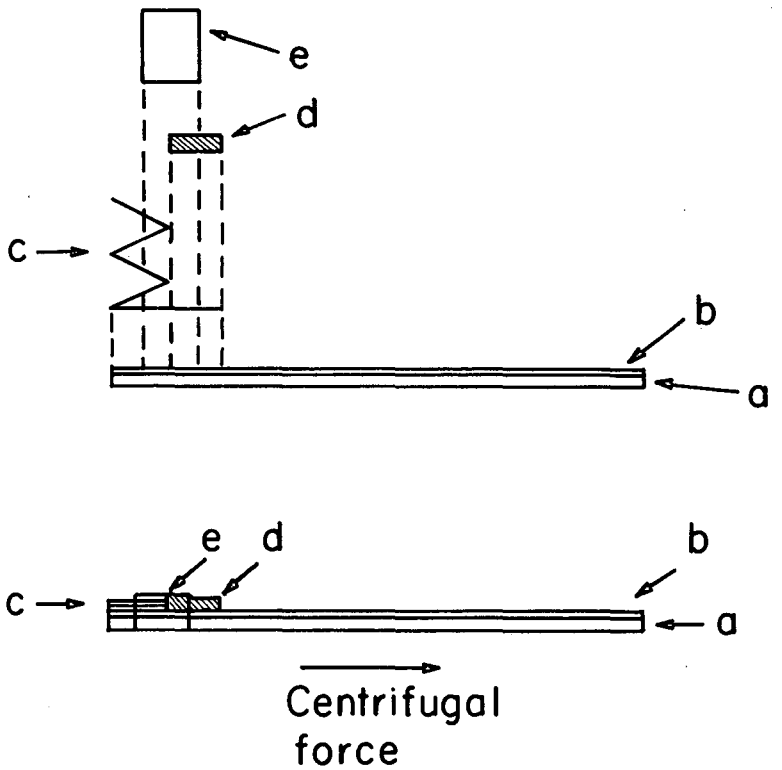

MU-35373

Fig. 7. Experimental apparatus for centrifugal TLC on microscope slides: a. microscope glass slide b. thin layer of adsorbent c. strip of filter paper d. lucite paper holder e. transparent adhesive tape.

Good separations have been obtained by centrifugal paper chromatography at speeds between 200 and 750 rpm.[13,14,15] Since the adsorbent layers investigated are stable in this range of speeds it was concluded that the centrifugal thin layer chromatography method proposed is feasible, at least for these adsorbents and similar ones. The optimum operating speeds, however, need not be the same and should in general be lower since the thin-layer technique per se is faster than the paper technique.

The preliminary experiments were concluded by actually carrying out a separation with the system as shown in Fig. 7 using the test mixture of methyl red and methylene blue (See Sec. II. E). The mobile phase was distilled water. The sample solution was applied from a 1λ micropipette at a line 5 mm from the edge of the filter paper and the chromatoplates were centrifuged at 500 rpm in a clinical centrifuge.

The solvent front travelled 60 mm in a period of 1 min. Good separations were obtained with the R_f values of zero for methyl red and one for methylene blue.

C. Centrifugal Thin-Layer Chromatography on 5 × 30 cm Glass Plates

The method was adapted for use with 5 × 30 cm glass plates (3 mm thick) by using two cylindrical chambers which contain the chromatoplate, a solvent feeding tank and a solvent receiving tank, the latter for use in the continuous elution technique for which centrifugal chromatography is particularly suitable. The solvent is fed through a strip of Whatman No. 1 filter paper held against the adsorbent layer by a small (5 × 1 × 0.15 cm) Lucite plate secured to the glass plate with transparent adhesive tape.

The chambers (Fig. 8) are 1/8" Lucite tubes 13 inches long and 2 inches inside diameter. The ends of the tubes are tightly closed by screw caps and the chambers are firmly bolted by wing nuts to an aluminum rotor driven by a 1/3 hp universal electric motor controlled by a rheostat.

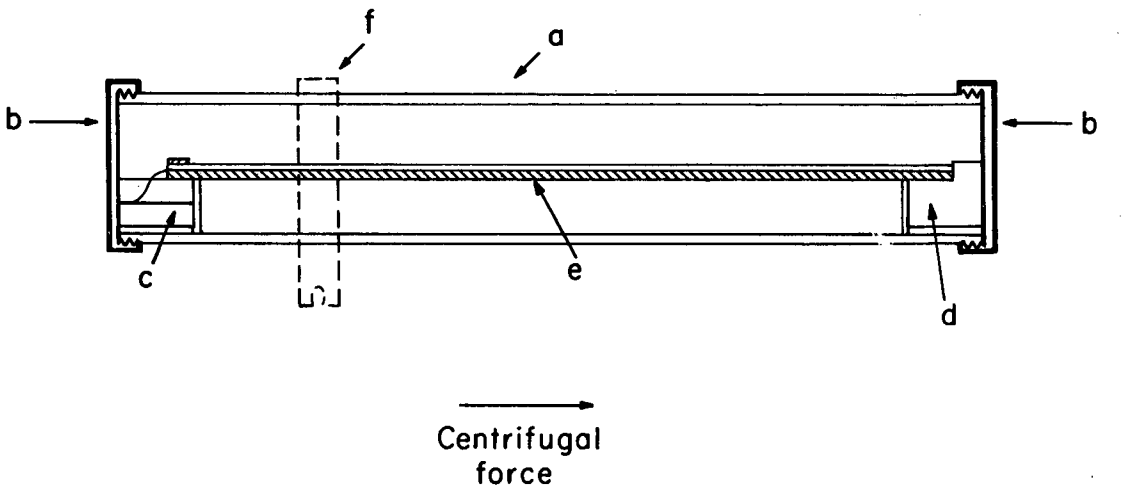

MU-35374

Fig. 8. Cylindrical chambers for centrifugal TLC: a. lucite tube b. screw caps c. solvent feeding tank d. solvent receiving tank e. chromatoplate fitted with strip of filter paper and lucite paper holder f. U-clamp to secure the chamber to the rotor.

Lucite was chosen for the construction of this and other apparatuses described in this work because it is easily machined, practically inert and readily available.

The apparatus was designed to be used primarily for the separation of radioactive substances. Because of this and in order to protect the operator against mechanical, chemical and radioactivity hazards the rotor and the chambers are enclosed in a glove box with 1/4" aluminum walls and bottom and a 1/4" Lucite cover (Fig. 9). The glove box was fitted with a blower that maintains in the interior a negative pressure relative to the laboratory room even when the centrifuge is operating at full speed. The outgoing air passes through a filter to trap any possible airborne contamination (Fig. 9).

D. Method of Operation

A wad of filter paper is placed in the feeding tank. The thin-layer plate, prepared in the usual manner, is placed in the chamber and fitted with the feeding filter paper strip. The sample solution is then applied from a micropipette at a line 2 cm from the end of the feeding strip. It is again possible to apply several spots in the same chromatogram or to apply the sample in the form of a band (See Sec. II. D). An appropriate solvent is added to the feeding tank and the chamber is tightly closed.

It is convenient to start the motor only after the solvent has reached the initial spot by capillary action. In the early stages the process is almost as fast with the centrifugal field as without it and a better solvent front is obtained in the latter case.

The optimum operating speed is a function of the stationary and mobile phases used, but it is generally between 300 and 500 rpm.

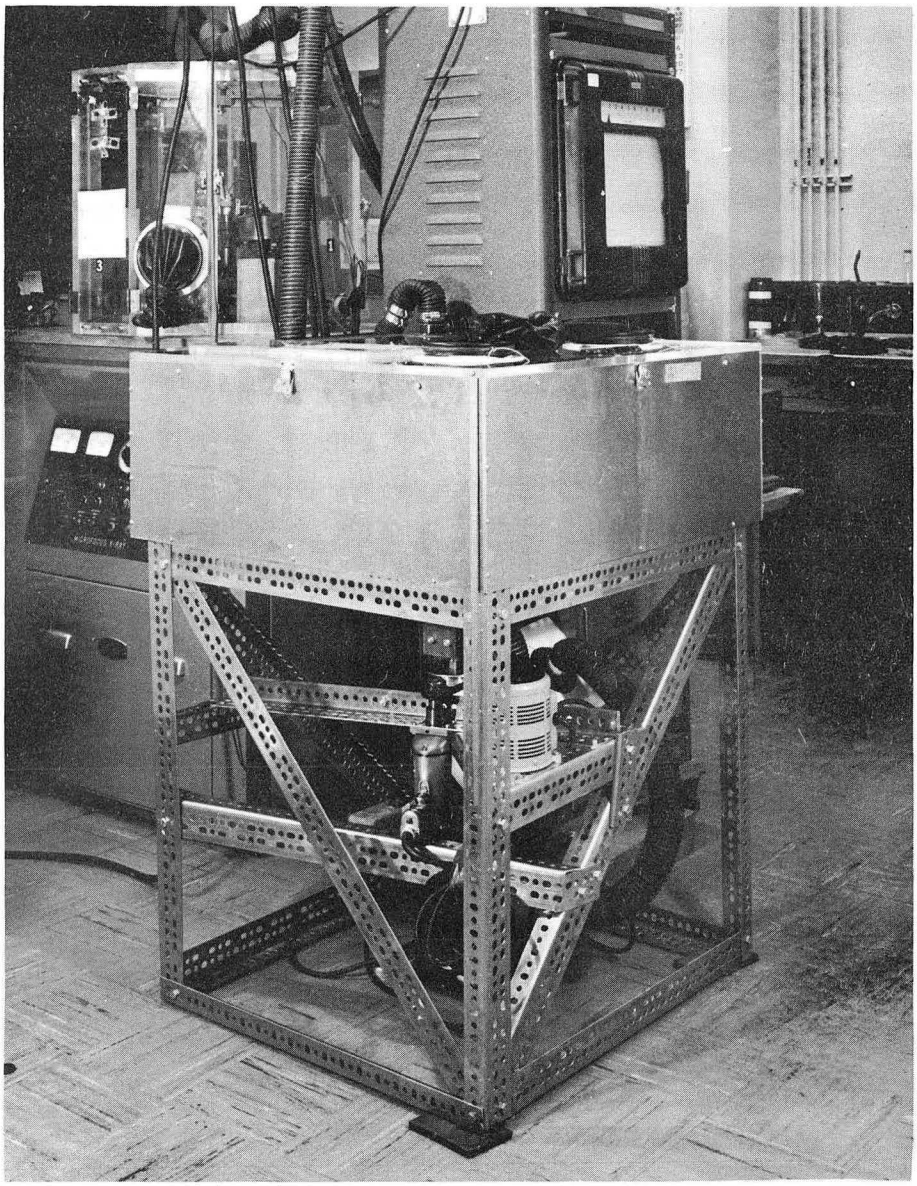

ZN-5049

Fig. 9. Glove box for the chromatofuge.

E. Testing of the Apparatus

The performance of the apparatus was tested with a mixture of 2% methyl red and 2% methylene blue in aqueous solution. The stationary phase was Bio-Rad (Dowex) AG 1-X8, -400 mesh ion-exchange resin and the mobile phase was distilled water. The R_f values obtained were zero for methyl red and one for methylene blue, with the solvent front at 12 cm from the origin.

Good separations were obtained in 20 minutes at 300 rpm.

F. Advantages and Disadvantages of the Cylindrical Chambers

The cylindrical chambers described have been used successfully to obtain good separations by the centrifugal TLC technique. These chambers have the advantages of ease of fabrication and ease of sealing but they have the disadvantage of a comparatively large free volume which makes proper saturation with the solvent vapor difficult.

It was also seen that the Lucite tubes used originally were not strong enough to withstand the centrifugal forces involved for long periods of time. The tubes showed severe cracks after 10 hours at 300 rpm plus one hour at 500 rpm and their use was discontinued for safety reasons. The useful life of the chambers can obviously be prolonged by the use of materials with greater mechanical strength.

IV. A UNIVERSAL CHROMATOGRAPHIC CHAMBER

The difficulties encountered with the cylindrical chambers discussed previously were eliminated by modifying the design, preserving, however, the basic characteristics. The chambers are now carved on Lucite blocks 38 cm long, 10 cm wide and 4.8 cm thick. Each chamber (Fig. 10) consists of a recess 6 mm deep to hold the chromatoplate, a solvent feeding tank and a solvent receiving tank. When the continuous elution technique is not used a Lucite block can be placed in the receiving tank to reduce the free volume of the chamber. The filter paper strip used to feed the solvent is again held by a small Lucite plate but it is now secured in a recess provided for that purpose.

The chambers are covered with a tight-fitting transparent Lucite plate to which a scale can be affixed; this allows easy observation of the progress of the separation. The clearance between the surface of the chromatogram and the cover is about 3 mm, so that the free volume of the chamber is small. The chambers are bolted with wing nuts to the aluminum rotor as used before (Figs. 11 and 12).

The method of operation is identical to that used with the cylindrical chambers. The apparatus was tested with the solution of methyl red and methylene blue used before, and similar results were obtained.

This design has proved to be very versatile: it can be adapted for ascending and descending chromatography using special interchangeable feeding and receiving tanks which fit inside the original tanks in the Lucite block. They can also be used for paper chromatography.

These chambers can then be used for horizontal, centrifugal, ascending or descending chromatography using either thin-layer plates or paper strips, and for multiple development[16] and continuous elution separations. Because of this versatility the designation of "universal chromatographic chambers" seems appropriate.

For horizontal chromatography the procedure is the same already described but the centrifugal field is not applied. Some separations proceed so rapidly of their own accord that centrifugal acceleration is not necessary.

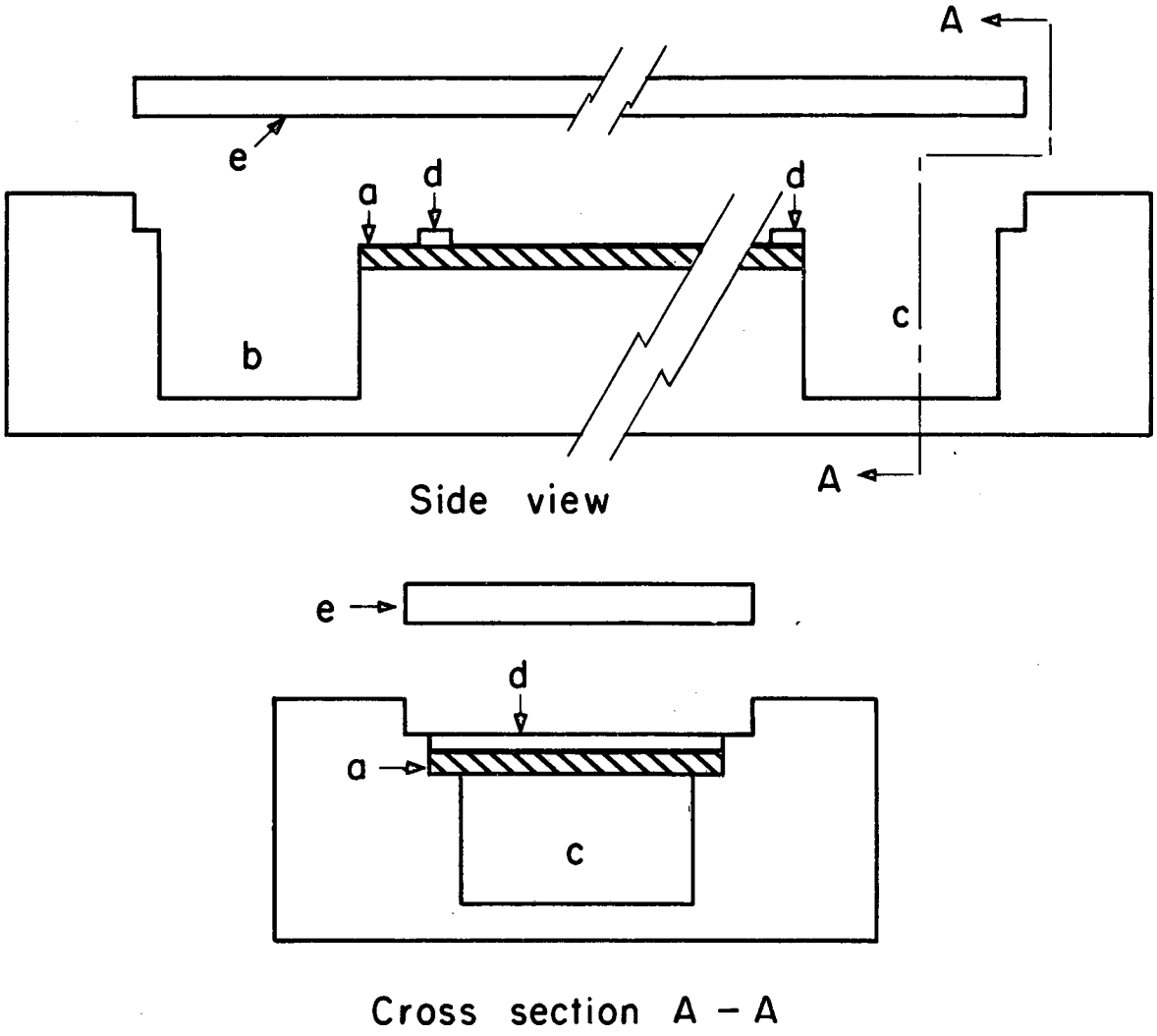

MUB-4897

Fig. 10. The universal chromatographic chamber: a. glass plate (chromatoplate) b. solvent feeding tank c. solvent receiving tank d. lucite paper holder e. cover

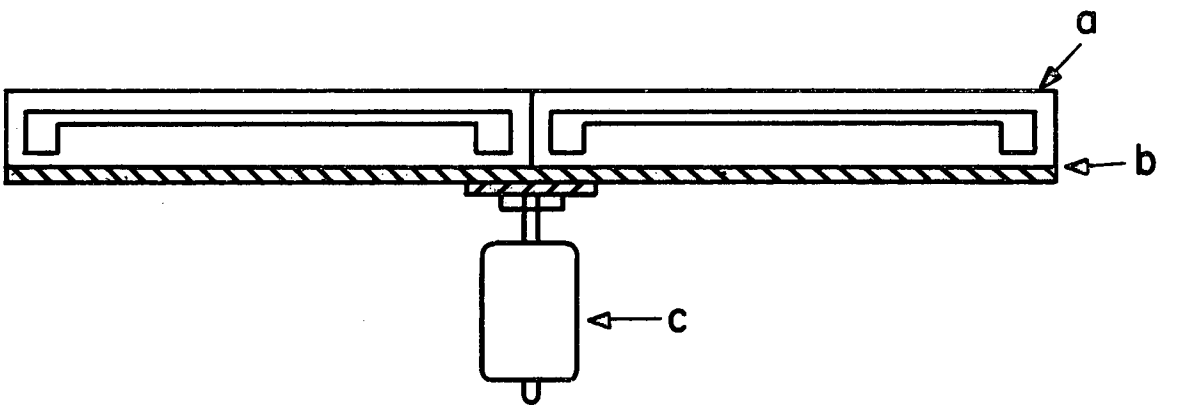

MUB-4898

Fig. 11. Apparatus for centrifugal acceleration of thin-layer chromatography. The enclosing box is not shown for greater clarity. a. chromatographic chambers b. rotor c. electric motor.

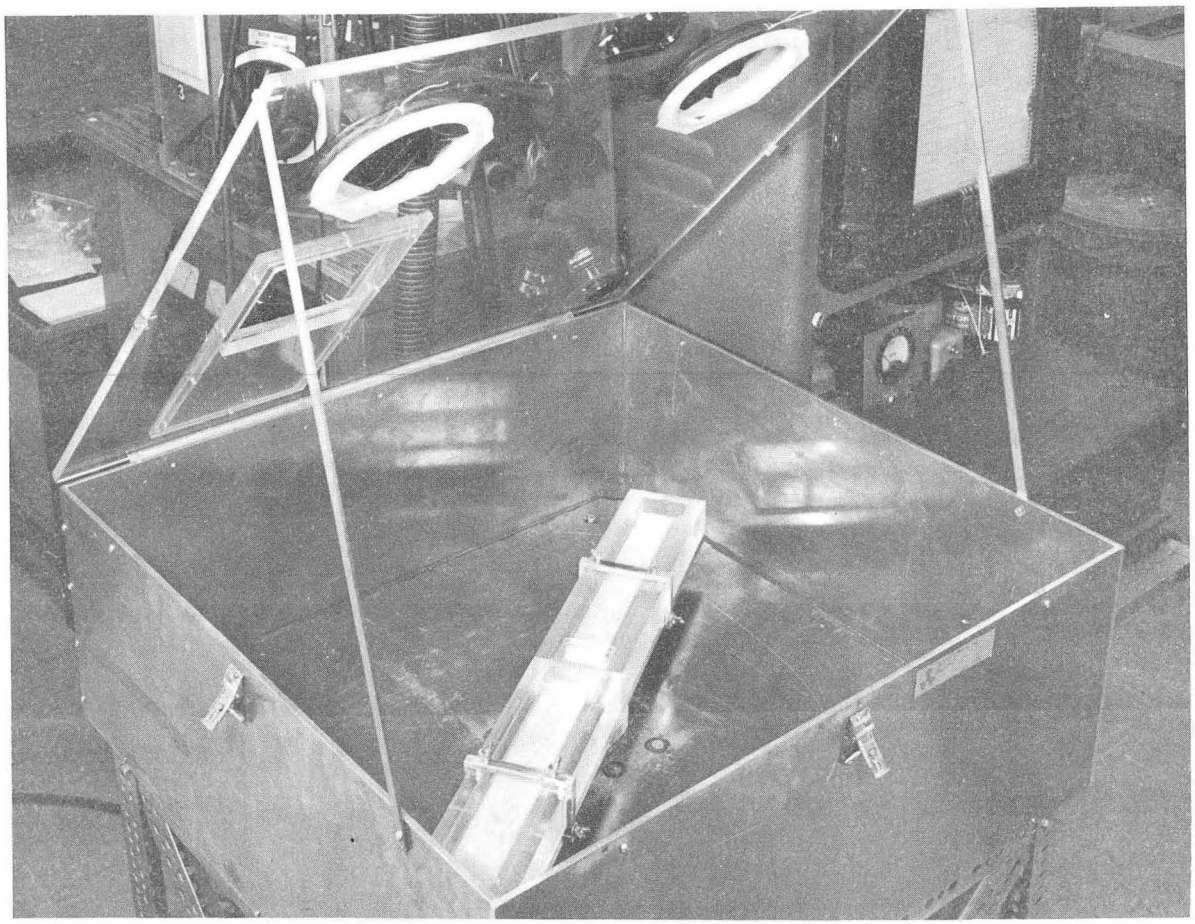

ZN-5050

Fig. 12. Apparatus for centrifugal acceleration of thin-layer chromatography. The universal chambers in the chromatofuge.

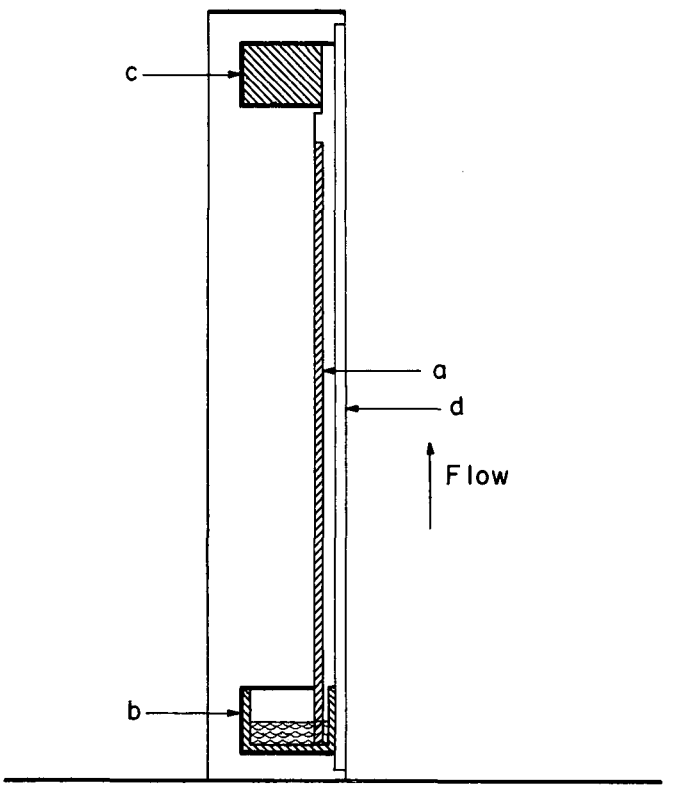

MU-35375

Fig. 13. The universal chromatographic chamber. Arrangement for ascending TLC: a. chromatoplate b. solvent feeding tank c. lucite block (to reduce free volume of the chamber) d. chamber cover.

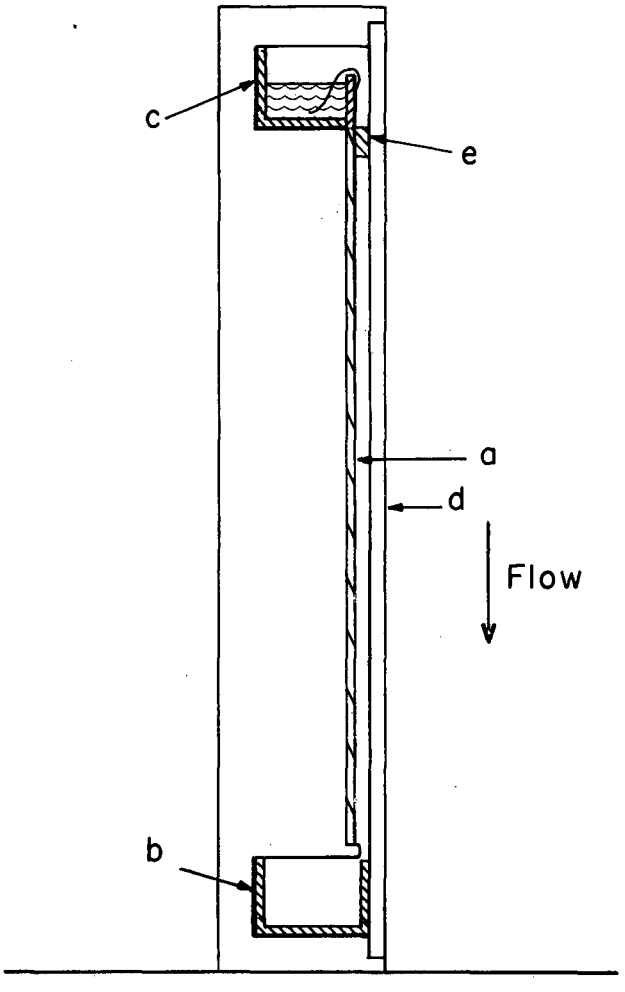

MU-35376

Fig. 14. The universal chromatographic chamber. Arrangement for descending TLC: a. chromatoplate fitted with feeding filter paper strip b. solvent receiving tank c. solvent feeding tank d. chamber cover e. lucite paper holder

The tanks for ascending and descending chromatography are shown in Figs. 13 and 14 which also illustrate their use.

V. FLOW RATE OF THE SOLVENT THROUGH THE STATIONARY PHASE

A. Introductory Remarks

The speed of separation in paper chromatography and in thin-layer chromatography is determined mainly by the flow rate of the mobile phase (solvent) through the stationary phase.

The flow rate of the mobile phase also influences the equilibrium of the process[17] and hence the resolution of the chromatogram, and indirectly the R_f values of the substances being separated.[18]

It is therefore important to review the factors that affect the rate of flow.

B. Factors Affecting the Rate of Flow

The principal factors that affect the rate of flow of solvent in paper chromatography and in thin-layer chromatography are:

a. the nature of the mobile phase-stationary phase system
b. the geometry of the stationary phase
c. the temperature of operation
d. the method of development.

The rate of flow can be varied to some extent by changing the above factors.

The nature of the mobile phase-stationary phase system is determined mainly by the nature of the substances one wishes to separate, but the system can be modified to increase the rate of flow. The mobile phase can be modified by the addition of surface-active agents and the stationary phase can be chosen so that its micro-structure (e.g., size and number of pores, alignment of channels, etc.) favors the flow of solvent.

The geometry of the stationary phase (i.e., the geometrical figure formed by the edges of the chromatogram) has been shown to influence the flow velocity in paper chromatography[19] and similar effects would presumably occur in thin-layer chromatography.

Elevated temperatures have been used to accelerate chromatographic separations but there are problems associated with the high vapor pressure of the majority of mobile phases.[12]

The influence of the method of development on the flow rate will be discussed in Sec. V. C.

C. Comparison of the Rates of Progress of the Solvent Front in Horizontal, Ascending and Centrifugal TLC

The different methods of development (horizontal, ascending, descending, and centrifugal) were compared under similar conditions using the same mobile phase-stationary phase system at the same temperature and in the same (universal) chromatographic chamber. The measurements were made using the test sample of 2% methyl red and 2% methylene blue in aqueous solution. The stationary phase was Bio-Rad (Dowex) AG 1-X8 minus 400 mesh ion exchange resin in the chloride form and the mobile phase was distilled water. The resin layer was of the same geometry (rectangular) and dimensions (30.0 × 4.6 cm and 250 microns thick*) in all cases.

As commonly done in paper chromatography the rate of flow was measured indirectly as the rate of progress of the solvent front which can be assumed to be proportional to the rate of flow per unit area of cross section. The results obtained are shown in Tables III to VIII and in Figs. 15 and 16. The speed of the solvent front at different times was obtained from these graphs by graphical derivation using the method of the mirror. The results are shown in Table IX and in Fig. 17. The

---

* thickness of the resin layer saturated with solvent

Table III. Rate of progress of the solvent front. Descending TLC.

Distance (cm)	Time (sec)	Distance (cm)	Time (sec)
0	0	14.0	910
1.0	20	15.0	1020
2.0	55	16.0	1140
3.0	95	17.0	1260
5.0	180	18.0	1365
6.0	245	19.0	1530
7.0	315	20.0	1680
8.0	390	21.0	1875
9.0	460	22.0	2055
10.0	560	25.0	2700
11.0	640	26.0	3000
12.5	785	27.0	3195
13.0	825	28.0	3660

Table IV. Rate of progress of the solvent front. Horizontal TLC.

Distance (cm)	Time (sec)	Distance (cm)	Time (sec)
0	0	16.5	1990
1.0	35	17.0	2100
2.0	80	17.5	2235
3.0	140	18.0	2355
4.0	205	18.5	2490
5.0	285	19.0	2640
6.0	370	19.5	2790
7.0	455	20.0	2940
8.0	575	20.5	3090
9.0	695	21.0	3225
10.0	825	21.5	3375
11.0	975	22.0	3540
11.5	1025	22.5	3735
12.0	1120	23.0	3915
12.5	1185	23.5	4110
13.0	1270	24.0	4290
13.5	1360	24.5	4515
14.0	1460	25.0	4755
14.5	1570	25.5	4965
15.0	1660	26.0	5220
15.5	1775	26.5	5640
16.0	1885	26.8	5830

Table V. Rate of progress of the solvent front. Ascending TLC.

Distance (cm)	Time (sec)
0	0
1.0	140
2.0	270
4.0	555
5.0	765
6.0	1050
7.0	1440
8.0	1920
9.0	2400
10.5	3240
11.0	3570
11.5	3870
12.0	4230
12.5	4650
13.0	4950
13.5	5460
14.0	5940
15.0	6570
16.0	7620

Table VI. Rate of progress of the solvent front. Centrifugal chromatography. Speed = 300 rpm.

Distance (cm)	Time (sec)	Distance (cm)	Time (sec)
0	0	12.0	1200
1.0	60	12.7	1260
1.5	120	13.5	1320
2.0	180	14.0	1380
2.5	240	14.7	1440
3.5	300	15.6	1500
4.5	360	16.5	1560
5.0	420	17.3	1620
5.5	480	17.7	1680
6.0	540	18.2	1740
6.5	600	19.0	1800
7.5	660	19.5	1860
8.0	720	20.0	1920
8.5	780	20.5	1980
9.0	840	21.0	2040
9.5	900	21.5	2100
10.0	960	22.0	2160
10.5	1020	22.6	2220
11.0	1080	23.5	2280
11.5	1140	24.0	2340

Table VII. Rate of progress of the solvent front. Centrifugal chromatography. Speed = 500 rpm.

Distance (cm)	Time (sec)
0	0
1.5	60
5.0	180
9.5	300
13.5	420
18.5	540
24.0	660
25.5	690

Table VIII. Rate of progress of the solvent front. Centrifugal chromatography. Speed = 570 rpm.

Distance (cm)	Time (sec)
0	0
0.6	45
5.5	120
12.0	240
19.5	360
24.0	420

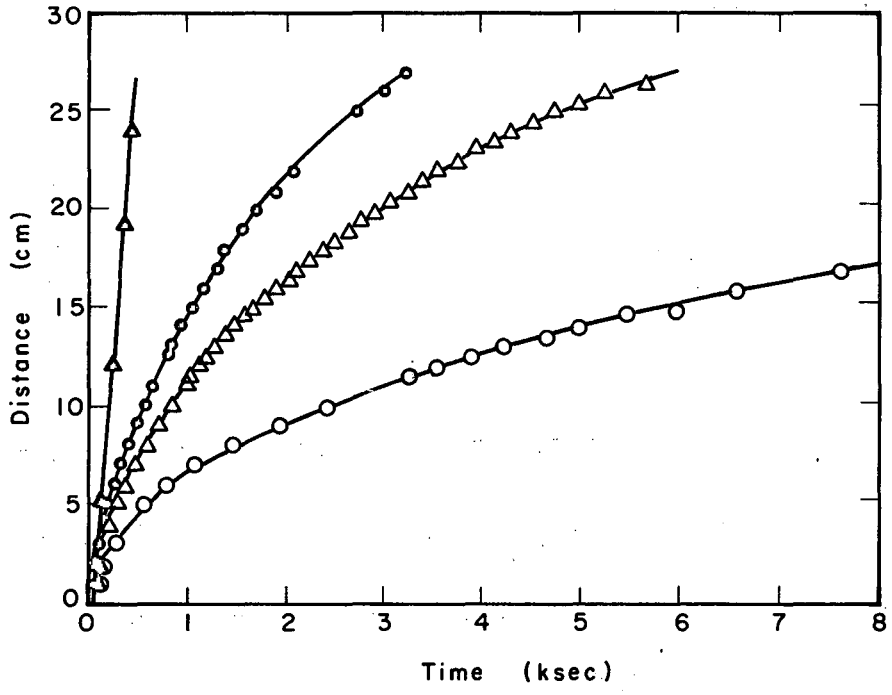

MU-35377

Fig. 15. Rate of progress of the solvent front: ● descending TLC b. △ horizontal TLC ○ ascending TLC ▲ centrifugal TLC at 570 rpm.

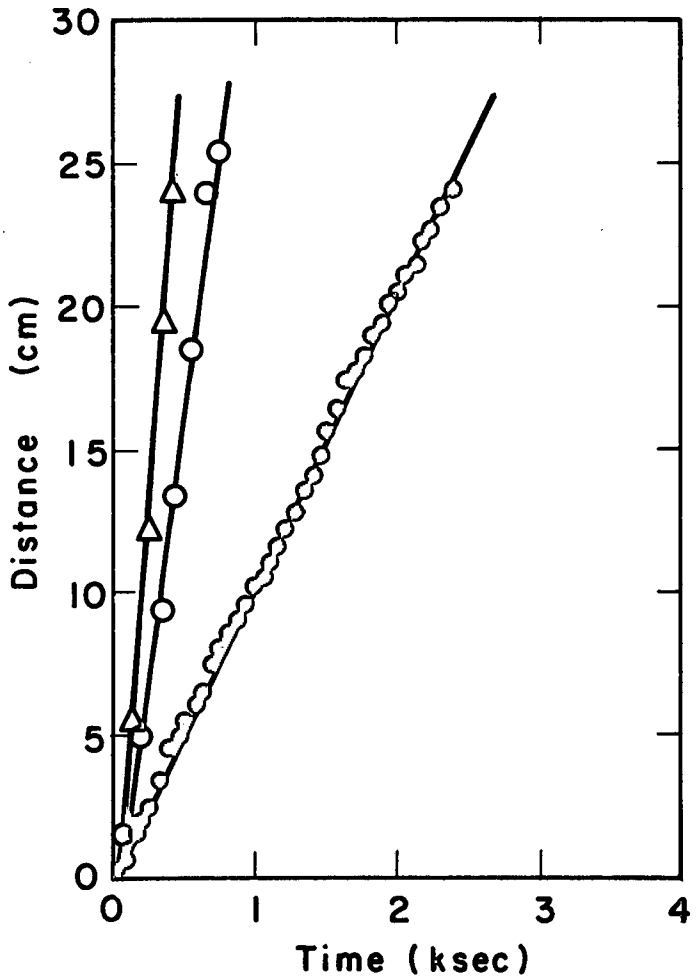

MU-35378

Fig. 16. Rate of progress of the solvent front. Centrifugal TLC: ● at 300 rpm ○ at 500 rpm △ at 570 rpm

Table IX. Variation of the speed of the solvent front.

Descending Chromatography		Horizontal Chromatography		Ascending Chromatography	
Time (ksec)	Speed (cm/ksec)	Time (ksec)	Speed (cm/ksec)	Time (ksec)	Speed (cm/ksec)
0	72.50	0	25.0	0	
0.5	12.50	0.5	8.4	0.5	6.4
1.0	9.00	1.0	6.6	1.0	3.2
1.5	6.75	1.5	4.6	1.5	2.4
2.0	5.00	2.0	4.2	2.0	2.1
2.5	4.50	2.5	3.8	2.5	2.0
3.0	4.00	3.0	3.2	3.0	1.6
3.5	4.00	3.5	3.0	3.5	1.6
		4.0	2.5	4.0	1.5
		4.5	2.4	4.5	1.4
		5.0	2.1	5.0	1.4
		5.5	1.3	5.5	1.4
				6.0	1.4
				6.5	1.4
				7.0	1.2
				7.5	1.0
				8.0	1.0

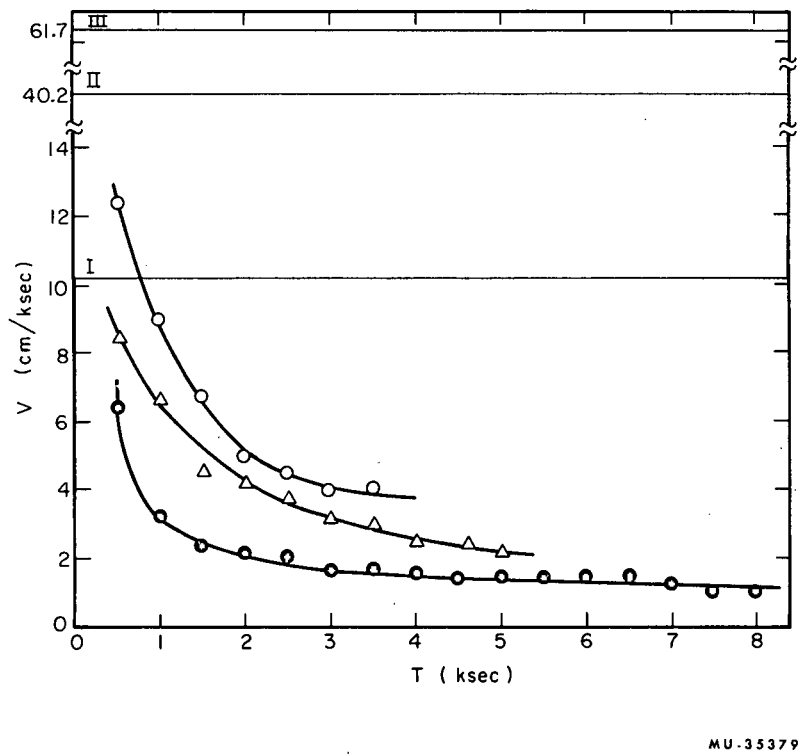

Fig. 17. Variation of the speed of the solvent front:
O descending TLC △ horizontal TLC
● ascending TLC. I. Centrifugal TLC at 300 rpm
II. Centrifugal TLC at 500 rpm III. Centrifugal TLC at 570 rpm

speeds are given in (cm/ksec). This unit was chosen as a matter of convenience: the conventional time system (using hours, minutes and seconds) is not decimal and it is very awkward for calculations. It was decided to measure time in seconds only but this unit is very small and the kilosecond was adopted instead. Expressed in conventional time 1 ksec = 16 minutes 40 seconds.

The above data show that the flow starts quite rapidly in all the methods. However, the rate of flow falls sharply as the distance from the origin increases except in the centrifugal case in which it remains constant. Of the non-centrifugal methods the fastest is the descending, followed by the horizontal. The ascending technique is the slowest.

It is evident that the centrifugal technique is particularly advantageous for the separation of substances whose R_f values are very low or very close together. In these cases the solvent front must travel a comparatively long distance to effect a separation. The advantage obtained is twofold: the separation is achieved in a shorter period of time and the spots obtained are smaller since the spot size increases linearly with time.[20]

D. Flow Rate and Equilibrium

It has been shown both theoretically and experimentally[17] that the flow rate in column chromatography (commonly expressed as volume per unit time or as volume per unit time per unit area of cross section) influences the equilibrium of the process. True equilibrium is attained only at very low flow rates[21] but then the process is very slow. As the flow rate increases the process is faster but non-equilibrium conditions will prevail and the zones containing the substances being separated increase in size bringing about a lower resolution. For a given system there is an optimum flow rate (or range of flow rates) which yields a

separation with good resolution in a reasonable time. This optimum rate has been determined for many systems. Typical values are of the order of a few $cm^3/min/cm^2$.

E. Flow Rate Per Unit Area of Cross Section in Descending TLC and in Centrifugal TLC

It is now interesting to determine the flow rate per unit area of cross section in a thin-layer chromatographic separation and compare it with the optimum flow rate one would use in an analogous column operation.

The system chosen for this study is one using as stationary phase Bio-Rad (Dowex) AG50W-X12 ion exchange resin, minus 400 mesh, in the ammonium form and as mobile phase a 0.4 M aqueous solution of ammonium alpha-hydroxy-isobutyrate. This is the system used in the separation of Am and Cm which will be discussed later (Sec. VII. C) as an application of the centrifugal TLC technique. The optimum rate of flow for this separation in a column is about 500 $\lambda/min/cm^2$.

Thin-layer chromatography as normally carried out cannot be rigorously compared with column chromatography because there are some important differences in the two methods:

a. in thin-layer chromatography the process is normally started with the stationary phase dry whereas in column chromatography the stationary phase is initially saturated with solvent

b. in thin-layer chromatography the process is normally interrupted before the solvent flows out of the stationary phase whereas in column chromatography the solvent is passed through the stationary phase in a continuous stream

c. in thin-layer chromatography the stationary phase is not completely enclosed, but has a large free surface where evaporation can occur to a greater or lesser degree whereas in column chromatography the stationary phase is completely enclosed and the evaporation of the solvent is nil.

A fairly approximate comparison can however be made if these differences are eliminated by running the thin-layer chromatogram as one would run a column, i.e., by passing the solvent in a continuous stream through the saturated thin-layer in a tightly closed chamber.

Since the stationary phase is not completely enclosed but has a free surface, there is the possibility that a portion of the solvent might flow over the adsorbent layer.

This possibility was investigated by microscopic observations of the chromatographic process in a horizontal thin-layer chromatogram. It was seen that the solvent flows only through the adsorbent layer.

In the case of the centrifugal technique it is of course impossible to observe the process directly, but again it seems unlikely that there is any flow over the adsorbent layer. When the layer is deliberately flooded the surface of the chromatogram reflects light as does the free surface of any ordinary liquid; but when the solvent is within the adsorbent layer the chromatogram has a mat appearance. All the chromatograms developed by the centrifugal technique have shown this mat appearance immediately after the centrifuge is stopped.

The descending and centrifugal techniques were chosen for this study because they are the most amenable to column type operation.

The adsorbent layers were of the same geometry (rectangular) and dimensions (30 × 5 cm and 250 microns thick*) in both cases. This represents a cross section of 0.125 cm^2. The experiments were done in the same (universal) chamber at the same temperature.

The descending chromatogram was allowed to run for 24 hours and the volume of effluent was measured every six hours.

The centrifugal chromatogram was run at 310 rpm because this had been found to be a suitable speed from the point of view of the mechanical properties of the layer. The chromatogram was run for two hours and the volume of effluent was measured every 15 minutes.

---

*thickness of the resin layer saturated with solvent

The results obtained were the following:

a. for descending TLC:

Total flow rate = 7 λ/min

Flow rate per unit area of cross section = 57 λ/min/cm^2

b. for centrifugal TLC at 310 rpm:

Total flow rate = 54 λ/min

Flow rate per unit area of cross section = 429 λ/min/cm^2 .

These results show that the flow rate per unit area of cross section in centrifugal TLC is very similar to the optimum flow rate in a column while the flow rate in descending TLC is very much lower.

F. Theoretical Considerations on the Influence of Solvent Flow on the R_f values

Wood and Strain[22] have derived an equation in which the variation of the R_f values with the distance travelled by the solvent front is expressed as a function of the quantity of solution and its distribution in the adsorbent.

In one of its forms this equation can be written as

$$\frac{dR}{dz} = \frac{1}{z}(Z - R)$$

where R is the R_f value, z is the distance travelled by the solvent front and Z is a new parameter which is the ratio of the speeds of the solute front (y) and the solvent front (z):

$$Z = \frac{dy/dt}{dz/dt}$$

According to this equation, a non-uniform distribution of solvent (which will give rise to different flow velocities along the chromatogram) will cause a variation of the R_f values as the distance travelled by the solvent front increases.

There are several possibilities according to the values of R and Z relative to each other.

If R is constant then Z must also be constant and equal to R.

If Z is constant but different from R it can be either greater or smaller than R. If Z is greater than R then dR/dZ will be greater than one and the R value will increase. If Z is smaller than R then dR/dZ will be less than one and the R value will decrease.

If Z is not constant but a function of z, then R may increase or decrease.

These different possibilities are summarized in Table X.

Table X. Different possibilities in the equation of Wood and Strain.

$$R = \text{constant} \; ; \; R = Z$$

$$Z = \text{constant} \begin{cases} Z = R \\ Z \neq R \begin{cases} Z > R \rightarrow \dfrac{dR}{dZ} > 1 \rightarrow R \uparrow \\ Z < R \rightarrow \dfrac{dR}{dZ} < 1 \rightarrow R \downarrow \end{cases} \end{cases}$$

$$Z = f(z) \neq \text{constant} \rightarrow R \updownarrow$$

An increase is denoted by an arrow pointing upward and a decrease is denoted by an arrow pointing downward.

The distribution of solvent in the stationary phase is a function of the nature of the stationary phase and the solvent and of the method of development.

When aqueous solutions flow through paper the cellulose fibers absorb water relatively slowly and the paper becomes saturated progressively. This causes a non-uniform distribution of solvent in ascending and in horizontal (radial) development. But in descending development the solvent is distributed fairly uniformly.[22]

The R_f of methyl orange in paper (Eaton-Dikeman, Grade 301) using water as solvent was found to be constant in descending development and to decrease in ascending development. The R_f appeared also to be constant in horizontal (radial) development in spite of the non-uniform distribution of solvent.

The distribution of solvent was determined experimentally for a system using Bio-Rad (Dowex) AG 1-X8, minus 400 mesh ion exchange resin and water. Several chromatograms were prepared and developed by the different methods (horizontal, ascending, descending and centrifugal). After development of each chromatogram the resin layer was divided in sections along the direction of flow and the sections were removed by scraping (See Sec. II. G), weighed in an analytical balance, dried at 130°C for one hour and reweighed. The solvent was found to be uniformly distributed (within experimental error) in all cases. From this considerations one would expect the R_f values to be constant in this system.

VI. TANDEM CHROMATOGRAPHY

When two substances have very similar R_f values the solvent front must travel a relatively long distance for a separation to occur. In some cases the spots reach the end of the chromatogram before being completely separated.

If the horizontal technique is being used the length of a chromatogram can be increased by placing two or more chromatoplates in tandem and filling the gap between them with dry adsorbent. This is done by the method of Connolly et al.[10] using an Al foil mask with a 1 mm slit. The adsorbent is packed by firmly drawing the back of a spatula over the slit in the mask.

The length of the chromatogram is only limited by the diffusion of the spots, since their size increases linearly with time and there comes a point where they can no longer be detected or their edges may merge again.

In the case under discussion (i.e., two substances with very similar R_f values) the two spots travel very close together and eventually they will both be in the second plate. It is very advantageous to remove then the first plate and feed the solvent directly into the second one. The time of development is thereby shortened since the rate of progress of the solvent front decreases rapidly as the distance from the origin increases (See Table IV and Fig. 15).

The tandem technique can also be used in the chromatofuge. The chromatoplates are prepared on 5 × 15 cm glass plates. The universal chamber can contain only two plates: one near the center of rotation (inner position) and the other next to the receiving tank (outer position). When the spots approach the end of the outer plate this is transferred to the inner position (after removing the original inner plate) and a new outer plate is placed in the chamber.

This process can be repeated several times, the length of the chromatogram being limited again by the diffusion of the spots.

Although the flow of solvent causes some elongation of the spots the rate of lateral diffusion is the same in a moving spot and in a static one.

This was shown experimentally using the methyl red and methylene blue test mixture (Sec. II. E) applied by the bead implantation technique (Sec. II. D) in Bio-Rad(Dowex) AG 1-X8, minus 400 mesh resin layers. Two beads containing the test dyes were applied simultaneously, one in a normal horizontal chromatogram and the other in a horizontal resin layer wet with solvent but with no net flow. This latter was achieved by covering the layer with a square sheet of Whatman No. 1 filter paper with a circular orifice (16 mm in diameter) in the center and wet with solvent. The bead is applied in the center of the orifice (Fig. 18).

The diameter of the static spot was compared with the lateral diameter (the diameter in a direction normal to the flow) of the moving spot. Both diameters were found to be equal at all times.

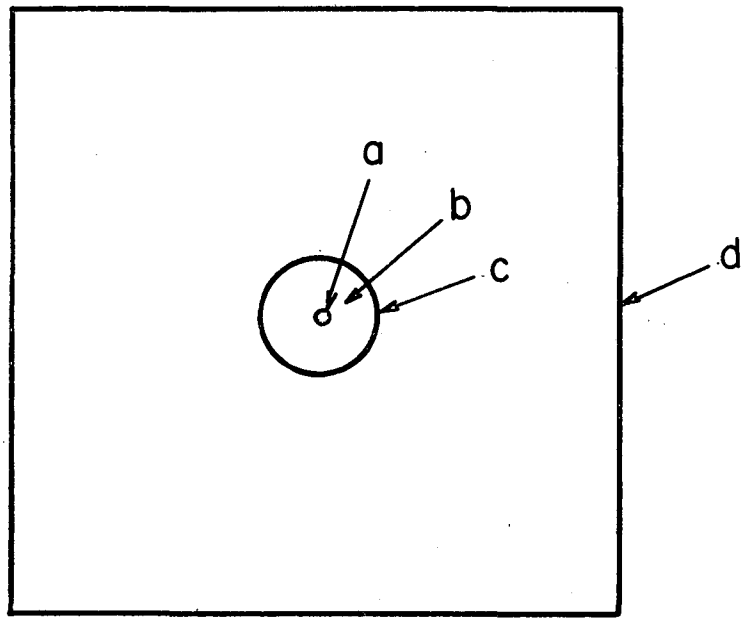

MU-35380

Fig. 18. Experimental arrangement to study the diffusion of a static spot: a. resin bead containing the dye b. resin layer c. circular orifice d. Whatman No. 1 filter paper.

VII. APPLICATIONS

A. Separation of Zr^{95} and Hf^{181}

Mixtures of Zr^{95} and Hf^{181} have been separated in a column packed with Dowex-1 resin spheres in the chloride form and eluting with 9 M hydrochloric acid.[23]

A similar separation was achieved using the TLC technique with ion exchange resin beads. The stationary phase was Bio-Rad(Dowex) AG 1-X8, minus 400 mesh ion exchange resin in the chloride form and the mobile phase was 9 M hydrochloric acid. A development time of 43 minutes was required for the solvent front to travel 12.2 cm from the origin, using the ascending technique. The R_f values are 0 for Zr and 1 for Hf. An autoradiography (Fig. 19a) was obtained as described in the next chapter using Ilford G Industrial X-ray film. The exposure time was 7 hours.

The same separation was also carried out by the centrifugal TLC technique at a speed of 300 rpm using the universal chambers. The solvent front traveled 6.5 cm in 7 minutes. An autoradiography (Fig. 19b) was obtained as before but the exposure time was 20 hours.

B. Separation of Zr^{95} and Nb^{95}

Using methods and conditions similar to those described above it was possible to separate Nb^{95} from Zr^{95}.

The stationary phase was Bio-Rad (Dowex) AG 1-X8, minus 400 mesh ion exchange resin in the chloride form and the mobile phase was 10 M HCl. The separation was done by centrifugal TLC at 300 rpm; the solvent front traveled 27 cm in 27 minutes. An autoradiography was obtained with an exposure time of 32 hours (Fig. 20).

The R_f values are zero for Zr and one for Nb.

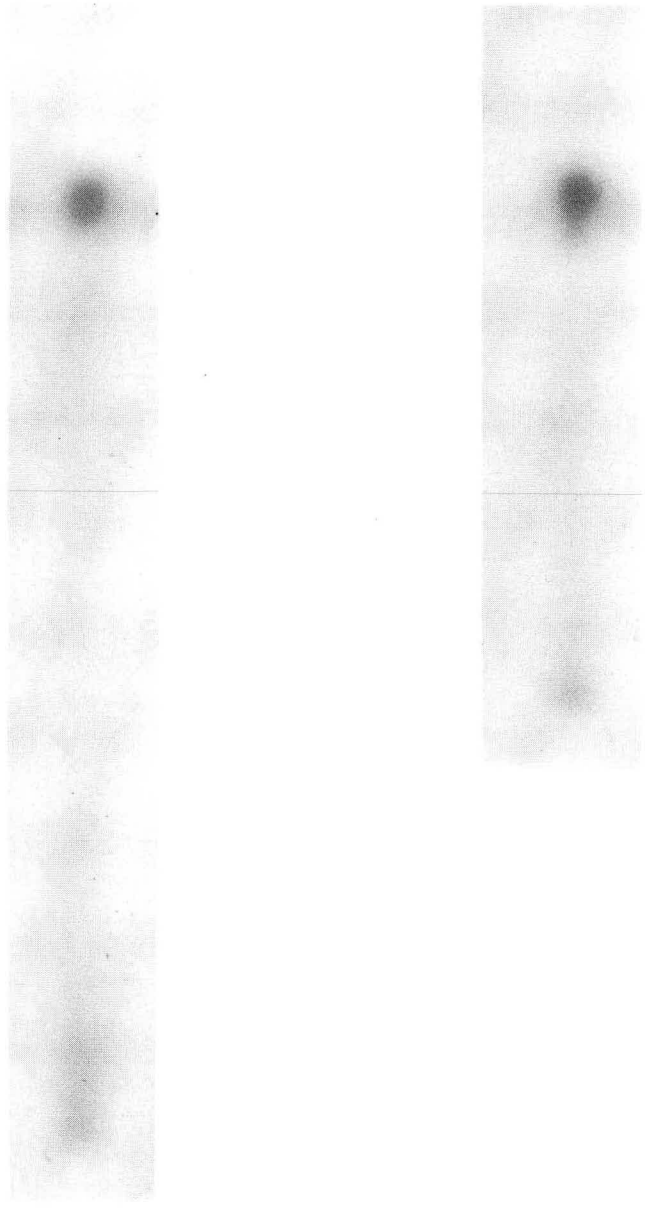

ZN-4814

Fig. 19. a. Separation of Zr^{95} and Hf^{181} by ascending TLC
b. Separation of Zr^{95} and Hf^{181} by centrifugal TLC.

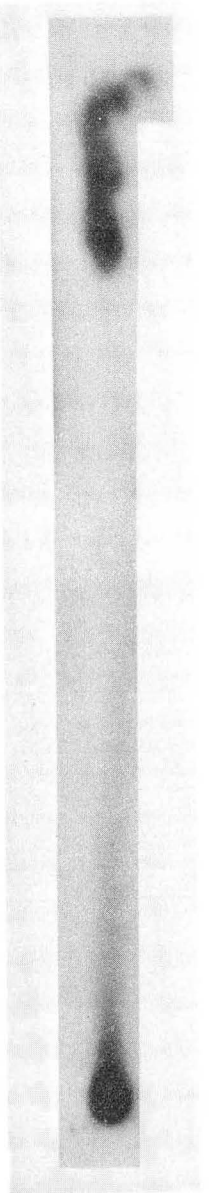

ZN-4815

Fig. 20. Separation of Zr^{95} and Nb^{95} by centrifugal TLC.

C. Separation of Am^{241} and Cm^{244}

Mixtures of Am and Cm have been separated in a Dowex 50-X12 cation resin column using as eluant a 0.4 M ammonium alpha-hydroxy-isobutyrate solution adjusted to pH 4.0.[24,25]

A similar separation was carried out by horizontal tandem TLC using as stationary phase Bio-Rad (Dowex) AG50W-X12, minus 400 mesh ion exchange resin in the ammonium form and as mobile phase a 0.4 M ammonium alpha-hydroxy-isobutyrate solution adjusted to pH 4.78 ± 0.02.

The solvent front traveled 57 cm in 13 hours and the R_f values obtained were:

Am - 0.75
Cm - 0.96

The same separation was done by centrifugal tandem TLC using the universal chromatographic chambers. The development time was 53 minutes at 310 rpm and the solvent front traveled again 57 cm. The chromatograms were evaluated by direct scanning and by autoradiography (Fig. 21). The exposure time was three days in both cases.

The purity of the separated substances was ascertained by pulse height analysis of the alpha radiation emitted by the spots. The energy spectra of the initial and final spots are shown in Fig. 22.

To obtain these spectra the spots were scraped from the TLC plate and the activity was eluted with concentrated HCl. The resulting solution was separated from the resin beads by centrifugation and then plated in Pt disks and flamed with an induction heater. The samples were then analyzed in a Hewlett-Packard 400 channel pulse height analyzer.

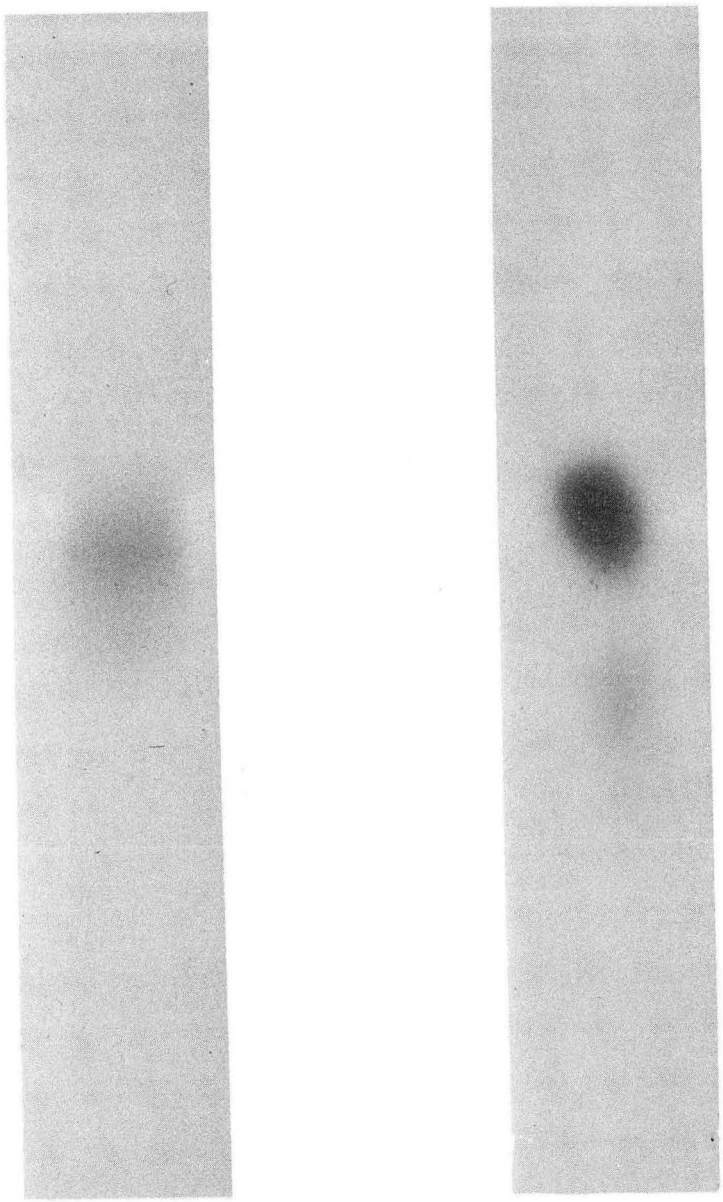

ZN-5055

Fig. 21. a. Separation of Am^{241} and Cm^{244} by horizontal TLC
b. Separation of Am^{241} and Cm^{244} by centrifugal TLC.

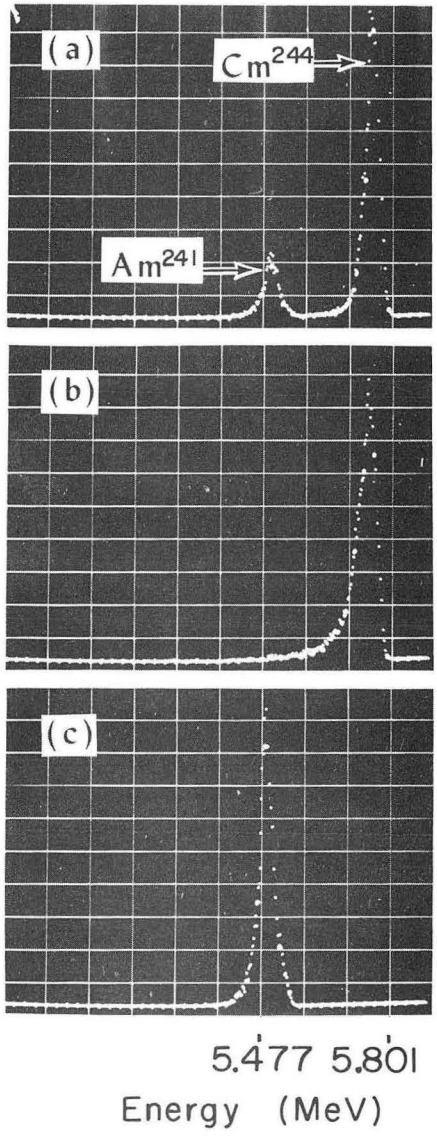

ZN-5054

Fig. 22. Separation of Am^{241} and Cm^{244}. Alpha spectra of the spots: a. initial spot, mixture of Am^{241} and Cm^{244} b. first (front) spot, Cm^{244} c. second (rear) spot, Am^{241}.

VIII. EVALUATION OF RADIOCHROMATOGRAMS

Various techniques have been developed for the evaluation of radiochromatograms. These techniques have been reviewed by Pocchiari and Rossi.[26]

In the experiments discussed in Sec. VIII the progress of the separations was followed by manual scanning using a Geiger-Müller detector for the beta and gamma emitters and a surface-barrier solid-state (ss) silicon detector[27] for the alpha emitters. Both detectors were coupled to ratemeters.

After the completion of the separations autoradiograms were taken to locate and define the spots more accurately.

In the case of paper chromatography autoradiograms have been made by lightly pressing the dried chromatograms on X-ray film, either directly[28] or with a sheet of "Cellophane" intervening,[29] and exposing the film for a suitable length of time.

Schwane and Nakon[30] have used a similar method with TLC plates, placing a sheet of thin plastic (Mylar, Saran Wrap or Handi-Wrap) between the chromatogram and the film.

This technique was tested with the ion exchange resin chromatoplates but it was found that it is very difficult to avoid damaging them, however slightly.

Direct contact between the radiochromatogram and the photographic film is unsatisfactory from the point of view of safety because it may lead to contamination of the film and of the developing solutions. The use of sheets of "Cellophane" or other materials can also lead to contamination.

These difficulties are avoided by holding the photographic film a short distance above the chromatoplate. Two rectangular section Lucite bars are placed along the edges of the chromatoplate and the film is laid on top. The height of the bars must exceed the thickness of the chromatoplate by about 1 mm and they must be slightly longer than the plate. A second glass plate is placed over the film to keep it in place and prevent it from buckling (Fig. 23).

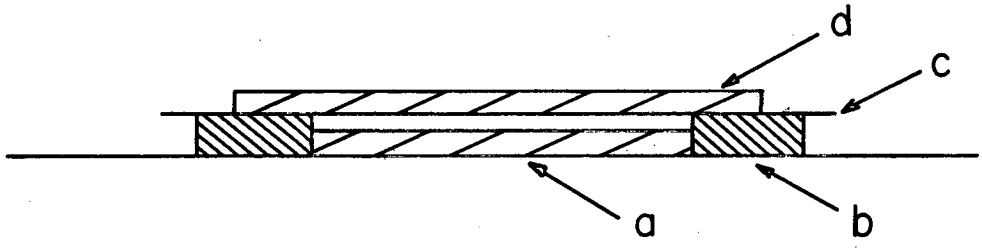

MU-35381

Fig. 23. Arrangement to obtain autoradiographies without direct contact with the chromatoplate: a. chromatoplate b. Lucite bars c. photographic film d. glass plate.

An improved and more versatile apparatus for this same purpose consists of a base with a shallow recess to hold the chromatoplate and a frame to hold the photographic film. Both were constructed of Lucite. The frame has four screws which permit varying the distance between the chromatogram and the film to compensate for any variations in the thickness of the glass plates or of the layers. A 1/4" Lucite plate is placed over the film to secure it in place (Fig. 24).

As the distance between the radiochromatogram and the photographic film increases the images produced become more diffuse and the exposure times longer because the radiations are partially absorbed and scattered by the air. These effects however, are small if the distance is approximately of 1 mm.

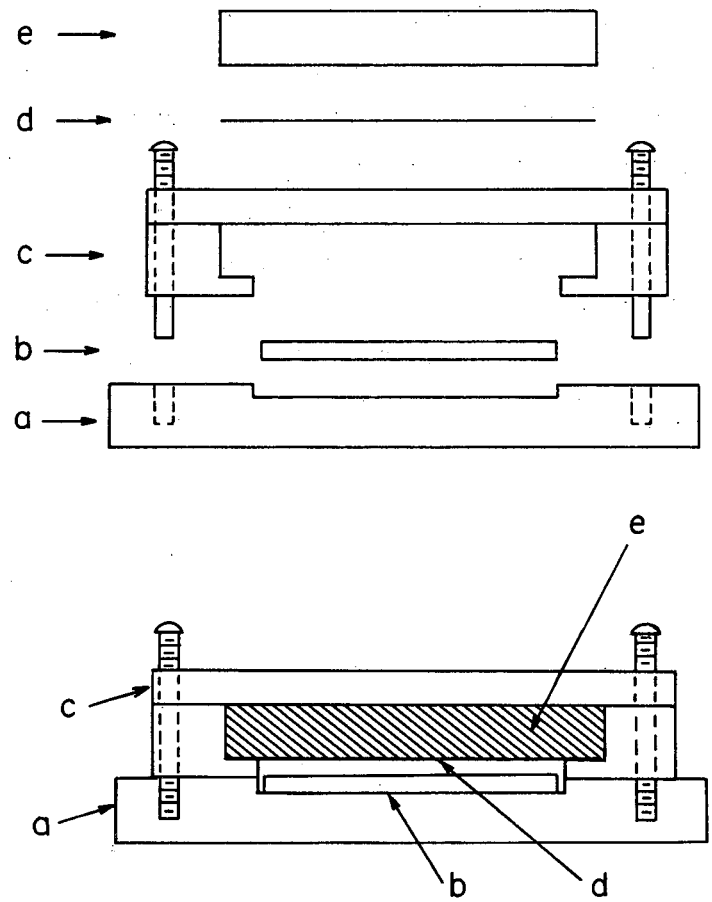

MU-35382

Fig. 24. Apparatus for autoradiography of TLC plates: a. base b. chromatoplate c. frame d. photographic (X-ray) film e. 1/4" Lucite plate.

IX. CONCLUSIONS

The thin-layer chromatography method using ion exchange resins without any admixture eliminates the effects caused by the presence of binding substances or of cellulose as in the case of ion exchange papers. This lessens the difference between column chromatography and thin-layer chromatography and simplifies the transference of separations by one method to the other.

The centrifugal thin-layer chromatography method can produce good separations in a period of time substantially shorter than that necessary with the conventional (non-centrifugal) methods. In the examples discussed in this paper the development time in the centrifugal method was from 6 to 13 times shorter than in the other methods. It is not possible to make a general quantitative statement concerning the time reduction obtained since the speed of the process depends on the particular system and conditions used.

This technique requires however an apparatus and an operating procedure more complicated than those used conventionally. This disadvantage is common to all centrifugal chromatography methods and their use is therefore not justified for occasional analyses.

On the other hand the centrifugal method should be valuable for analyses where high speed of resolution is important, such as those involving unstable substances (e.g. short-lived radioisotopes), and for routine analyses, particularly those involving substances with very low R_f values or substances with very similar R_f values. In these cases the solvent front must travel a relatively long distance for a separation to occur and it may be necessary to resort to multiple development or stepwise elution which are ordinarily very time-consuming.

Another advantage of the centrifugal method is that it yields smaller spots, since the process of separation is faster and the size of the spots increases linearly with time.

The method of tandem TLC permits the separation of substances with very similar R_f values which cannot be achieved in shorter

chromatoplates. The method is slow if it is done by horizontal chromatography but it can be accelerated by means of a centrifugal field.

ACKNOWLEDGEMENTS

I am greatly indebted to Professor Burris B. Cunningham, my research director, for his valuable advice and suggestions.

Helpful suggestions were also received from Dr. James C. Wallmann and Mr. Tom Parsons.

I wish to thank Dr. Harold S. Johnston for his encouragement and counsel.

Thanks are due to Mr. Bert C. Watkins and Mr. Hagop Hagopian who built most of the equipment designed during this investigation. Mr. Hagopian contributed many practical suggestions during the construction of the equipment.

I am very grateful to my wife and my parents for their support in this work.

This work was done under the auspices of the U. S. Atomic Energy Commission.

FOOTNOTES AND REFERENCES

1. K. Randerath, Thin-Layer Chromatography, (Academic Press, New York, 1964), p. 3.
2. E. Heftmann, Anal. Chem. 36 (5), 14R (1964).
3. E. A. Peterson and H. A. Sober, J. Am. Chem. Soc. 78, 751 (1956).
4. K. Randerath, Nature (London) 194, 768 (1962).
5. E. V. Truter, Thin Film Chromatography, (Interscience Publishers, New York, 1963), p. 15.
6. J. Berger, G. Meyniel, J. Petit and P. Blanquet, Bull. Soc. Chim. France 11, 2662 (1963).
7. E. H. Lowenhaupt, University of California Lawrence Radiation Laboratory, Berkeley, (Private Communication).
8. H. F. Walton, Anal. Chem. 36 (5), 51R (1964).
9. E. V. Truter, Thin Film Chromatography, (Interscience Publishers, New York, 1963), p. 52.
10. J. P. Connolly, P. J. Flanagan, R. O. Dorchaí and J. B. Thomson, J. Chromatog. 15, 105 (1964).
11. Dowex: Ion Exchange, (The Dow Chemical Company, Midland, Michigan, 1959), p. 12.
12. M. Lederer (Ed.), Chromatographic Reviews, Vol. 6, (Elsevier Publishing Co., Amsterdam, 1964), p. 19.
13. J. R. Tata and A. W. Hemmings, J. Chromatog. 3, 225 (1960).
14. H. J. McDonald, L. V. McKendell and E. W. Bermes, J. Chromatog. 1, 259 (1958).
15. M. Pavliček, J. Rosmus and Z. Deyl, J. Chromatog. 7, 19 (1962).
16. K. Randerath, Thin-Layer Chromatography, (Academic Press, New York, 1964), p. 45.
17. G. E. Boyd, L. S. Myers and A. W. Adamson, J. Am. Chem. Soc. 69, 2849 (1947).
18. J. C. Giddings, G. H. Stewart and A. L. Ruoff, J. Chromatog. 3, 239 (1960).
19. A. L. Ruoff and J. C. Giddings, J. Chromatog. 3, 438 (1960).

20. L. Ossicini, J. Chromatog. 8, 404 (1962).
21. E. Ekedahl, E. Hogfeldt and L. G. Sillen, Nature (London) 166, 723 (1950).
22. S. E. Wood and H. H. Strain, Anal. Chem. 26, 260 (1954).
23. E. H. Huffman, G. M. Iddings and R. C. Lilli, J. Am. Chem. Soc. 73, 4474 (1951).
24. G. R. Choppin, B. G. Harvey and S. G. Thompson, J. Inorg. Nucl. Chem. 2, 66 (1956).
25. J. Milsted and A. B. Beadle, J. Inorg. Nucl. Chem. 3, 248 (1956).
26. F. Pocchiari and C. Rossi, J. Chromatog. 5, 377 (1961).
27. R. J. Walker, T. R. Corbin and J. T. Haley, University of California Radiation Laboratory Report UCRL-11300, (February 1964)
28. D. Cavallini, C. De Marco and B. Mondovi, J. Chromatog. 3, 20 (1960).
29. R. M. Fink, C. E. Dent and K. Fink, Nature (London) 160, 801 (1947).
30. R. A. Schwane and R. S. Nakon, Anal. Chem. 37, 315 (1965).

This report was prepared as an account of Government sponsored work. Neither the United States, nor the Commission, nor any person acting on behalf of the Commission:

A. Makes any warranty or representation, expressed or implied, with respect to the accuracy, completeness, or usefulness of the information contained in this report, or that the use of any information, apparatus, method, or process disclosed in this report may not infringe privately owned rights; or

B. Assumes any liabilities with respect to the use of, or for damages resulting from the use of any information, apparatus, method, or process disclosed in this report.

As used in the above, "person acting on behalf of the Commission" includes any employee or contractor of the Commission, or employee of such contractor, to the extent that such employee or contractor of the Commission, or employee of such contractor prepares, disseminates, or provides access to, any information pursuant to his employment or contract with the Commission, or his employment with such contractor.