UCRL-16066

University of California

Ernest O. Lawrence Radiation Laboratory

TEMPERATURE DEPENDENCE OF THE ENERGY PER ELECTRON-HOLE PAIR IN SILICON

TWO-WEEK LOAN COPY

This is a Library Circulating Copy which may be borrowed for two weeks. For a personal retention copy, call Tech. Info. Division, Ext. 5545

Berkeley, California

DISCLAIMER

This document was prepared as an account of work sponsored by the United States Government. While this document is believed to contain correct information, neither the United States Government nor any agency thereof, nor the Regents of the University of California, nor any of their employees, makes any warranty, express or implied, or assumes any legal responsibility for the accuracy, completeness, or usefulness of any information, apparatus, product, or process disclosed, or represents that its use would not infringe privately owned rights. Reference herein to any specific commercial product, process, or service by its trade name, trademark, manufacturer, or otherwise, does not necessarily constitute or imply its endorsement, recommendation, or favoring by the United States Government or any agency thereof, or the Regents of the University of California. The views and opinions of authors expressed herein do not necessarily state or reflect those of the United States Government or any agency thereof or the Regents of the University of California.

Submitted to Physics and Chemistry of Solids

UCRL-16066

UNIVERSITY OF CALIFORNIA

Lawrence Radiation Laboratory
Berkeley, California

AEC Contract No. W-7405-eng-45

TEMPERATURE DEPENDENCE OF THE ENERGY PER ELECTRON-HOLE PAIR IN SILICON

Lawrence D. Posey

May 17, 1965

TEMPERATURE DEPENDENCE OF THE ENERGY PER ELECTRON-HOLE PAIR IN SILICON

Lawrence D. Posey

Lawrence Radiation Laboratory
University of California
Berkeley, California

May 17, 1965

ABSTRACT

The average energy required to produce an electron-hole pair in Si under α-particle bombardment was measured over the temperature range of 90°K to 325°K. The room-temperature value of 3.57 ± .01 eV was found to be in good agreement with other recent experimental work. The temperature dependence of ϵ was found to be in good agreement with the theory of Shockley for temperatures above 250°K. The discrepancy between theory and experiment at lower temperatures can be qualitatively explained by the temperature dependence of the electron optical-phonon scattering process.

INTRODUCTION

An α particle interacts with a semiconducting material via any or all of the processes of valence-electron excitation or ionization, and lattice-atom displacement or stimulation. The former is the dominant mechanism at all but the lowest α-particle energies, whereas the latter is the dominant energy-loss mechanism at energies below about 1 keV for Si as the stopping medium.

Of these mechanisms the electron excitation and ionization energy loss is of primary concern to us, because the quantity under study is the average energy, ϵ, required to produce an electron-hole pair in Si by an α particle. It is to be understood that in the following discussion consideration is limited to pairs consisting of conduction-band electrons and valence-band holes. It is proper to limit our attention to electron excitation and ionization, as the α-particle energy loss through lattice atom stimulation should be quite ineffective in the production of electron-hole pairs.*

The energy spectrum of recoil electrons at any given position along the α-particle track is most heavily populated for low energies. This is a result of the preference for small energy transfer in the Coulomb scattering cross section. The high-energy electrons (or δ rays, as they are sometimes called) and the deep-lying holes undergo further interaction with the lattice atoms and produce additional electron-hole pairs. These pairs in turn produce even more electron-hole pairs, and this multiplication process continues until none of the existing electron-hole pairs has enough energy to excite an electron from the valence band to the conduction band. The total number of electron-hole pairs existing at the conclusion of this "avalanche"

process therefore determines the average energy required to produce an electron-hole pair in the material for a given type of incident particle.

It has been observed experimentally that, for a given material and for particle energies substantially in excess of the threshold energy for interband transitions, ϵ is independent of incident-particle type and energy. Koch et al.[1] suggest that this is indeed reasonable, as the secondary, tertiary, etc., recoil electrons are to a great degree responsible for the electron-hole pairs existing at the end of the "avalanche." Therefore they conclude that regardless of the type of energetic particle incident upon the semiconductor the electron-hole pair formation is in fact controlled by subsequent electron-electron interactions. These primary, secondary, etc., electrons lose a fraction of their energy through electron-phonon interactions, so that one expects ϵ to be greater than E_g.

McKay[2] has pointed out that the measured values of ϵ for a number of solids are approximately equal to E_g plus a constant term on the order of 2.5 eV (see Table 1). This constant was attributed to energy lost to the crystal lattice through electron-phonon scattering.

Shockley,[3] in analyzing these two energy-loss mechanisms in greater detail, introduced an average electron approximation which enabled him to consider only electrons capable of producing but a single electron-hole pair. In the formation of an electron-hole pair by such average electrons an amount of energy equal to the minimum ionization energy, E_i, must be expended. From measured photoionization data, Shockley found E_i to be equal to the forbidden energy gap, E_g, for Si. In addition, both carriers of the pair possess some residual kinetic energy, E_f. Assuming the energy bands of a parabolic form and an equal probability for any final energy from

0 to E_i, one found the average final energy to be $E_f = 0.6\ E_i$; this energy must therefore be lost to the lattice. The accompanying energy lost through phonon scattering prior to electron excitation had to be determined. Shockley reasoned that optical phonon scattering was the mechanism primarily responsible for energy transfer to the lattice for the "hot" electrons of the avalanche. In this case the energy lost to the lattice is rE_R, where E_R is the quantum of energy for the optical phonon of zero wave number and r is the ratio of the mean free path for electron excitation, L_i, to that for optical phonon scattering, L_R. The value of E_R has been measured for Si (by use of neutron diffraction)[4] and found to be $E_R = 0.063 \pm 0.003$ eV. Using photoionization data, Shockley also found the mean-free-path ratio to be $r = 17.5$. The average energy required to produce an electron-hole pair is then given by

$$\epsilon = 2.2\ E_g + rE_R, \qquad (1)$$

since, for Si, $E_i = E_g$. It is therefore expected that ϵ should be temperature-dependent, as E_g increases with decreasing temperature.[5] In addition, E_R and r are also weak functions of temperature; E_R is dependent upon temperature through the unit cell volume, while r exhibits a temperature dependence arising from the dependences of L_R and L_i, which are expected to decrease and increase respectively with increasing temperature.

Czaja[6] arrived at a modified form of equation (1) by assuming the lattice energy-loss term to be proportional to the Debye energy, $k\theta_D$, rather than E_R, and then determined an empirical relation between θ_D and E_g for the group IV semiconductors. The result obtained in this way was

$$\epsilon = (2.2 + r'\ ky)\ E_g + r'\ kx, \qquad (2)$$

where r' is the ratio of mean free path for electron excitation to that for accoustical phonon scattering, k is the Boltzmann constant, and x = 200°K and y = 400°K/eV are empirically determined constants. The temperature dependences of ϵ predicted by equations (1) and (2) differ because the mean free paths for optical and accoustical phonon scattering in general exhibit disimilar dependences upon temperature.

After the experimental work described herein was begun, results were reported for the measurement of the energy per electron-hole pair in Si over the temperature interval 210°K to 290°K and for surface-barrier detectors in the resistivity range of 1000 to 3000 Ω cm.[7] In this work the temperature and resistivity ranges are extended, and in addition the results are compared with the theoretical predictions of both Shockley and Czaja. The work was performed with surface-barrier detectors of intermediate and high resistivity (500 and 15 000 Ω cm).

EXPERIMENTAL PROCEDURE

The average energy required to produce an electron-hole pair in Si by an α particle was measured with Si surface-barrier detectors obtained from commercial sources. These included one Nuclear Diodes PL 2-20-5 detector (231), two ORTEC SBDJO25 detectors (3-330 and 3-332) and one Molechem N-250-40 detector N-38.

A 1-μC Am^{241} alpha source was employed (the 85% abundant 5.477-MeV α particle was used in determining ϵ), and the source and solid-state detector were contained in a vacuum chamber and the measurements made at pressures in the range of 1 to 10 μ of Hg. This pressure range resulted in negligible α-particle energy loss in traversing the distance between source and detector. Each solid-state detector was placed in a brass sample holder, which acted as a uniform-temperature environment for the detector.

The electronic system employed in the measurements consisted of a RIDL Model 31-18 Nuvistor preamplifier and RIDL Model 30-21 Linear-Amplifier Window-Amplifier Combination (the Model 30-21 served as a scale expander and amplifier), and the spectrum of output pulses was stored in a RIDL Model 256 400-channel analyzer. A Franklin Model 370 pulse generator was used in conjunction with a General Radio Model 1403N standard air capacitor to supply calibration pulses to the input of the preamplifier. An electrometer-voltmeter was used to measure the bias applied to the diode. In addition, the voltage of the pulses applied to the standard capacitor was continuously monitored with a digital voltmeter. The block diagram for the system is shown in Fig. 1.

Temperatures in excess of room temperatures were achieved by heating a distilled water bath. The other fixed temperatures and associated baths were 275°K (distilled water ice bath), 200°K (dry ice and ethyl alcohol bath), and 90°K (liquid nitrogen bath--LN). The intermediate temperatures between 90°K (LN) and 275°K were attained on a semitransient basis through the addition of coolant (dry ice or LN) required to maintain the desired temperature within ±5°K.

In all cases except detector N-38, the range of applied bias for each detector was chosen such that the depletion region thickness passed from values less than the α-particle range to values in excess of it. Detector N-38 was of such high resistivity that the junction thickness was more than the α-particle range for all values of the reverse bias. The reverse bias spanned the interval from 1 to 50 V, and in a few instances (for detector 231 only) was as high as 100 V.

When the region over which the field exists (that is, the depletion region) is much thicker than the depth of penetration of the α particles, the charge collected is given by[8]

$$Q_m = Q_0 \left(\frac{\mu V_D \tau}{W^2}\right) [1 - \exp(-W^2/\mu V_D \tau)], \tag{3}$$

where Q_0 is the total charge produced by the incident α particle, W is the depletion-region thickness, μ is the charge-carrier mobility, V_D is the applied bias, and τ is the average time a charge carrier can move before undergoing recombination or trapping. For large applied bias (that is, $W^2/\mu V_D \tau \ll 1$) equation (3) becomes

$$Q_m [1 - W^2/\mu V_D \tau]. \tag{4}$$

The depletion region of a surface-barrier solid-state detector is not in general large compared with the α-particle range unless the device is of high-resistivity material or is subject to large reverse bias.

RESULTS AND DISCUSSION

Figure 2 shows the circuit existing at the input side of the preamplifier while the electronic system was being calibrated and the spectra were being measured. In this figure C_D is the detector capacity, C_P is the effective preamplifier input capacity, and C_L is the total capacity of the coaxial leads and connectors employed on the input side of the preamplifier. In the circuit employed, $C_P > C_D \approx C_L > C_T$, where $C_T = 0.1$ pF. When the effective input capacity of the preamplifier is large compared with C_T, the test charge applied to the preamplifier is

$$Q_T = \frac{V_T}{(C_T^{-1} + C_0^{-1})} \approx C_T V_T, \tag{5}$$

where $C_0 = C_P + C_D + C_L$.

The calibration technique consisted of applying a set of test voltages, V_{Ti}, to the standard capacitor and then recording the magnitudes of the set of output pulses with the multichannel analyzer. By use of the test charge, $Q_{Ti} = C_{Ti} V_{Ti}$, and the associated mean channel for test pulse i, $\bar{X}_i$, calibration curves were constructed from the relation

$$Q = a + b\bar{X}, \tag{6}$$

where a and b were determined from the set of calibration points $(Q_{Ti}, \bar{X}_{Ti})$ by the method of least squares.

The calibration pulses and the α spectrum were stored in the analyzer at the same time, as this technique minimized the effect of drift of the electronic system. The spectra and calibration peaks measured for detector N-38 at 274°K are presented in Fig. 3.

Baldinger and Czaja[9] found the measured charge, Q_{eff}, to be dependent upon the voltage through the quantity $(V_D+\psi_D)^{-1/2}$, where ψ_D is the contact potential and V_D is the magnitude of the reverse bias. This dependence results from the decrease in C_D with increasing bias; namely, $C_D = C_{D0}(V_D+\psi_D)^{-1/2}$, so that one has

$$\frac{1}{Q_{eff}} = \frac{1}{Q_m}\left[1+\frac{C_D}{C_P+C_L}\right] = \frac{1}{Q_m} + \frac{C_{D0}}{Q_m(C_P+C_L)}(V_D+\psi_D)^{-1/2} \tag{7}$$

when a calibration is performed at only one bias setting and $W > R_\alpha$.

The alpha spectrum and calibration data were measured at one or more values of detector bias for each temperature. In this way Q_m was obtained for each bias setting. It was pointed out above that Q_m is dependent upon applied bias, and is much less than Q_0 when the junction thickness is less than the α-particle range. We therefore expected Q_m to increase and

eventually saturate with increasing V_D. This was not found to be the case, and in fact the $(V_D+\psi_D)^{-1/2}$ dependence was found to give a consistent fit of the experimental results for values of V_D such that $W>R_a$, although this behavior cannot be attributed to detector capacity changes. This can be seen from the results for detector N-38 in Fig. 4, where Q_m^{-1} is presented for a number of test temperatures (the value of 0.5 eV was used for ψ_D). Fabri et al. have also obtained plots of this form for the measured charge, and attribute the nonzero slope of the curves to charge-carrier trapping in the depletion region. In the region of operation where $W \geqslant R_a$ the situation is complex, and it is quite clear that Q_m should be bias-dependent, although it is not entirely obvious that this dependence should be of the $(V_D+\psi_D)^{-1/2}$ form. This is, however, the form assumed by Fabri et al.[7] and attributed to charge-carrier trapping. The same functional form is employed here.

In the limit of $W \gg R_a$ (in this work this condition is satisfied for detector N-38 only) it is possible to use equation (4) for Q_m. In addition, let us recall that $W = W_0(V_D+\psi_D)^{-1/2} \approx W_0 V_D^{1/2}$, so that equation (4) becomes

$$Q_m \approx Q_0[1- W_0^2/\mu\tau], \tag{8}$$

which is independent of applied bias.

The intercepts of the curves of Fig. 4 correspond to $V_D = \infty$ and are interpreted as being equal to Q_0^{-1}. The average energy per electron-hole pair was then determined from

$$\epsilon = qE_a\, Q_0^{-1}, \tag{9}$$

where $E_a = (5.477 - \Delta E_{sc})$ MeV, and ΔE_{sc} is the estimated energy lost by the α particle in traversing the gold contact on the front surface of the detector; ΔE_{sc} was assumed to be 10 ± 5 keV, so that $E_a = 5.467 \pm 0.005$ MeV.

The temperature dependence of ϵ as determined in the above manner is presented in Fig. 5 for the four detectors employed. In the figure the results are compared with the theoretical predictions represented by equations (1) and (2) (the temperature dependence of E_g was obtained from Macfarland et al.[5]). From Fig. 5 it is evident that for detector 231 the agreement with the theoretical prediction by Shockley is good at room temperature and above, but that there is substantial departure at the lower temperatures. Representative error limits are indicated in the figure, such as the point at 202°K (E_g = 1.144 eV).

As can be seen in Fig. 5, the discrepancy between theory and experiment is less pronounced for detectors 3-330, 3-322, and N-38, although the results for 3-322 and N-38 appear to exhibit a slightly weaker energy-gap dependence than predicted by Shockley. The measured values of ϵ for the four detectors are in reasonable agreement with one another, although ϵ for detector N-38 is consistently high. This is the high-resistivity detector for which the condition $W \gg R$ is approximately satisfied. On the basis of this, equation (8) suggests that the value of Q_0^{-1} determined from the extrapolation may be greater than the actual value, and as a consequence ϵ would be overestimated. Our results show better agreement with Shockley's equation than with Czaja's equation; there is a slight deviation at low temperature. As can be seen from Fig. 5, our results are in poor agreement with those of Fabri et al. The room-temperature value of $\epsilon = 3.57 \pm 0.01$ is in good agreement with the most recent measurements at this temperature, as can be seen from the results presented in Table 2.

The energy lost to the lattice through optical phonon scattering, $r E_R$, is obtained from the difference between the measured values of ϵ and $2.2\ E_g$.

Figure 6 shows the resulting values of $r E_R$ for all the detectors tested. The solid characters represent values with greater errors than the representative value indicated in the figure (resulting from greater uncertainty in extrapolated values of Q_0^{-1}). At temperatures above 250°K the points are seen to be in good agreement with the constant value used by Shockley. The measurements fall below this value, however, as the temperature decreases. Our results are once again in disagreement with the results of Fabri et al., and in fact exhibit the opposite dependence upon temperature.

In an electron-phonon scattering event the phonon-creation matrix element, M_c, is proportional to $(1+ n_P)^{1/2}$,[10] where n_P is the phonon population of the lattice eigenstate involved in the interaction (i.e., the $k = 0$ optical phonons of energy E_R considered by Shockley). The mean free path for optical phonon scattering introduced earlier is therefore inversely proportional to $(1+n_P)^{-1}$. The phonon population of these optical phonon lattice eigenstates is the sum of the number produced through electron-phonon scattering and the number arising from thermal generation. For the moment consider only the thermally generated phonons, in which case

$$n_{P,R} = [\exp(E_R/kT) - 1]^{-1} \tag{10}$$

and

$$(1+ n_{P,R}) = [1- \exp(-E_R/kT)]^{-1} \approx 1+ \exp(-E_R/kT), \tag{11}$$

for the values of $E_R/kT \geq 2$ encountered for the optical phonons in silicon. Then the ratio of L_R at a temperature T to its value at T = 300°K would be

$$L_R(T)/L_R(300°K) = 1.0875[1+ \exp(-E_R/kT)]^{-1}. \tag{12}$$

The temperature dependence of the optical phonon energy-loss terms is in this case controlled by the manner in which r depends upon temperature. Now, recalling that $r = L_i/L_R$, we would have the desired result providing it were possible to specify the temperature dependence of L_i. In the electron-electron scattering event the matrix element for the scattering event is independent of temperature, but the population of the initial and final states is dependent upon temperature through the Fermi-Dirac distribution function. The transition probability is therefore a function of temperature, but for the present we shall assume that L_i is a constant. This is not a bad approximation, since the population of the filled-valence-band and empty-conduction-band electron energy states are approximately proportional to $[1+\exp(-E_g/2kT)]$ for the high-resistivity material used in the preparation of surface-barrier detectors. The temperature dependence of L_i should therefore be much less than that of L_R, since $E_R < E_g/2$. According to this approximation, the ratio of the energy lost through optical phonon scattering at temperature T to that at 300°K is given by

$$\frac{rE_R \text{ at } T}{rE_R \text{ at } 300°K} = \frac{L_i}{L_R(T)} \frac{L_R(300°K)}{L_i} = 0.92[1+\exp(-E_R/kT)]$$

or

$$rE_R = 1.016[1+\exp(-E_R/kT)] \text{ eV}, \qquad (13)$$

where we have assumed $rE_R = 1.103$ eV at 300°K to be consistent with the value used by Shockley.

The results obtained from equation (13) are shown by the dotted line of Fig. 6. The experimental results of this work are seen to be in qualitative agreement with the temperature dependence predicted by equation (13). Consideration of the contribution to the phonon population arising from

electron-phonon scattering would lead to a weaker temperature dependence than predicted by equation (12), since equation (11) would have to contain an additional constant term that in all likelihood would be greater than $\exp(-E_R/kT)$.

CONCLUSIONS

The average energy per electron-hole pair obtained at room temperature, $\epsilon = 3.57 \pm 0.01$ eV, is in good agreement with the majority of other recent experimental work.

The temperature dependence of ϵ was found to be in agreement with the theoretical work of Shockley at temperatures above 250°K, although falling below theory at temperatures less than 250°K. The results showed an even greater disparity when compared with the theoretical work of Czaja and the experimental results of Fabri et al.

The measured temperature dependence of rE_R was found to be in qualitative agreement with that expected for optical phonon scattering when the corresponding lattice eigenstates are populated solely through thermal excitation. It appears that inclusion of the contribution to the phonon population arising from the electron-phonon scattering process would bring theory and experiment into better agreement.

The manner in which the measured charge depends upon the bias applied to the detector is not completely understood. Dependence of this quantity upon detector bias through the voltage-dependent detector capacity was eliminated by performing a calibration at each value of the detector bias. The observed voltage dependence of the measured charge [that is, $Q_m^{-1} = Q_0^{-1} + m(V_D + \psi_D)^{-1/2}$] must therefore be attributed to charge carrier trapping or to recombination in the depletion region of the solid-state

detector. It is, however, not at all obvious why this phenomenon should lead to a bias dependence of the form observed. Additional analytical and experimental work in this area is planned in order to make possible a more rigorous technique for the determination of Q_0^{-1}.

ACKNOWLEDGMENTS

I want to thank Professor T. H. Pigford for his encouragement during the course of the work and also for his critical review of this report.

I would also like to thank Mr. Dale Allaway for furnishing the alpha source.

This work was done under the auspices of the U. S. Atomic Energy Commission.

REFERENCES

1. Koch, L., Messier, J., and Valin, J., IRE Trans. Nucl. Sci. NS-8, 43 (1961).
2. McKay, K. G., Phys. Rev. 84, 829 (1951).
3. Shockley, W., Czech. J. Phys. B11, 81 (1961).
4. Palevsky, H., Hughes, D. J., Kley, W., and Tunkolo, E., Phys. Rev. Letters 2, 258 (1959).
5. Macfarland, G. G., McLean, T. P., Quarrington, J. E., and Roberts, V., Phys. Rev. 111, 1245 (1958).
6. Czaja, W., Helv. Phys. Acta 34, 760 (1961).
7. Fabri, G., Gatti, E., and Svelto, V., Phys. Rev. 131, 134 (1963).
8. Hofstadter, R., Proc. Inst. Radio Engrs. 38, 726 (1950).
9. Baldinger, E., and Czaja, W., Nucl. Instr. Methods 10, 237 (1961).
10. See, for example, J. M. Ziman, Electrons and Phonons (Oxford University Press, London, 1960), Chap. 5.

*In a semiconductor such an electron-hole pair production process would have to occur through the annihilation of high-frequency phonons, with an an associated excitation of electrons from the valence band to the conduction band. This process is highly unlikely in Si because $E_g(Si) \approx 1.1$ eV, whereas the phonon energies are not greater than about 0.1 eV.

Table 1. Forbidden energy gap and energy per electron-hole pair for various solids.

Material	ϵ (eV)	Eg (eV)	ϵ/Eg	(ϵ - Eg) (eV)
Diamond[a]	10	≈6	≈1.7	≈4
Ge[b]	3.0	0.72	4.2	2.3
Si[c]	3.5	1.1	3.2	2.4
AgCl[d]	7.6	4.88	1.6	2.7
AgBr[d]	5.8	3.95	1.5	2.4
CdS[b]	5→10	2.37	2→4	2→4

(a) McKay, K.G., Phys. Rev. 77, 816 (1950).

(b) McKay, K.G., Phys. Rev. 84, 829 (1951).

(c) Baldinger, E., Czaja, W., and Gutmann, J., Helv. Phys. Acta 35, 559 (1962).

Table 2. Average energy per electron hole pair, ϵ, in silicon for various ionizing radiations.

Particle type	ϵ (eV)	Year and Reference
α	3.6 ±0.3	1953(a)
α	3.6 ±0.1	1958(b)
α	3.60±0.15	1959(c)
β	3.53±0.07	1960(d)
β	3.69±0.14	1960(e)
α, or fission fragments	3.50±0.07	1960(f)
α	3.55±0.02	1962(g)

(a) McKay, K. G., and McAfee, K. B., Phys. Rev. 91, 1079 (1953).

(b) Davis, W. D., J. Appl. Phys. 29, 2311 (1958).

(c) McKenzie, J. M., Bull. Am. Phys. Soc. 4, 422 (1959).

(d) Koch, L., and Valin, J., Compt. Rend. 251, 2912 (1960).

(e) Mann, H., Diskuss. Bem. SNPD, S. 5.

(f) Miller, G. L., Brown, W. L., Donovan, P. F., and MacKintosh, I. M., I.R.E. Trans. Nucl. Sci. NS-7, 185 (1960).

(g) Baldinger, E., Czaja, W., and Gutmann, J., Helv. Phys. Acta 35, 559 (1962).

FIGURE CAPTIONS

Fig. 1. Block diagram of equipment used for the measurement of the energy per electron-hole pair in Si.

Fig. 2. Diagram of detector and test pulse components during a test pulse (where the associated capacitances are indicated).

Fig. 3. Calibration peaks and α-particle spectrum typical of the RIDL system.

Fig. 4. Plot of Q_m^{-1} vs $(V_D + \psi_D)^{-1/2}$ used in the determination of Q_0^{-1} for detector N-38.

Fig. 5. Comparison of energy per electron-hole pair for all the detectors employed.

Fig. 6. Optical-phonon scattering energy loss term for the hot electrons produced via α-particle stopping in Si.

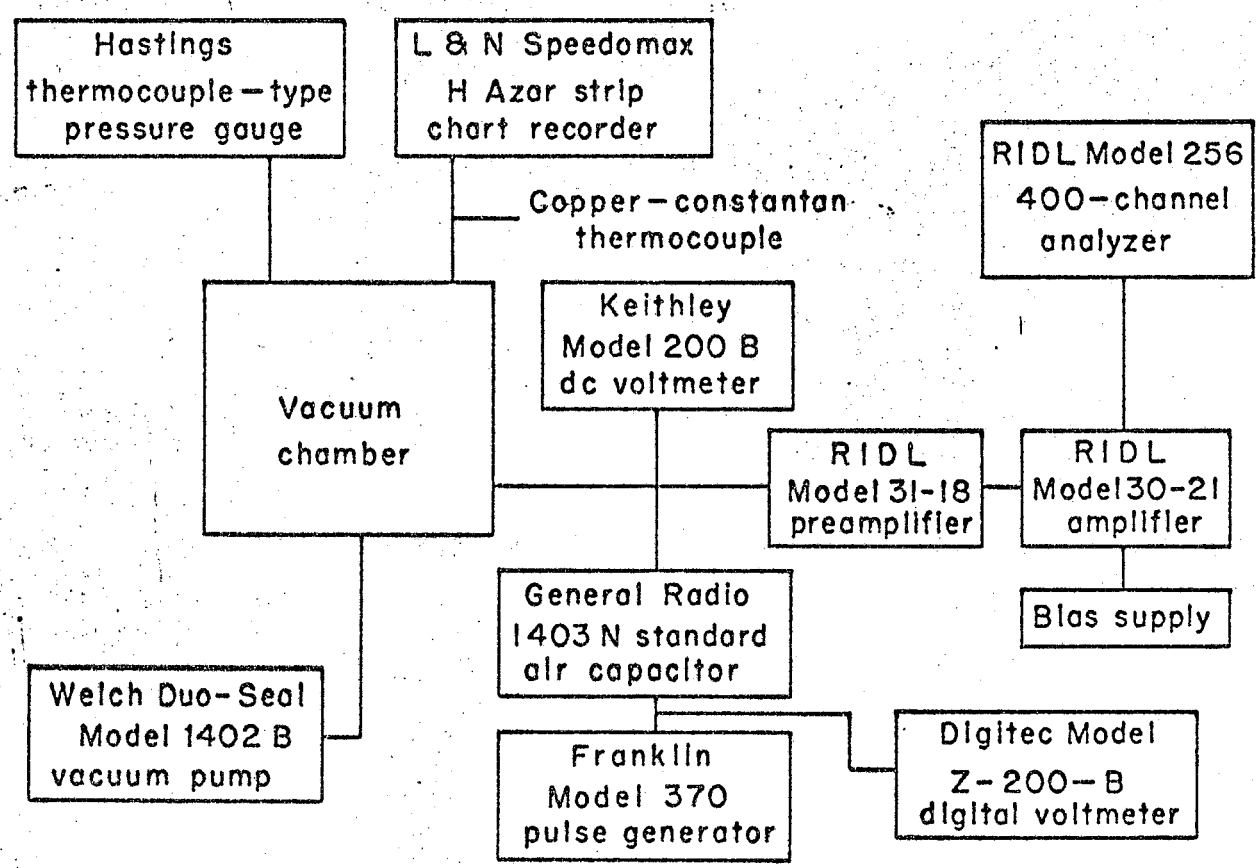

Fig. 1 MUB-6311

$C_T = 0.1$ pF
$V_0 \lesssim 100$ V
$R_1 \approx 20$ MΩ

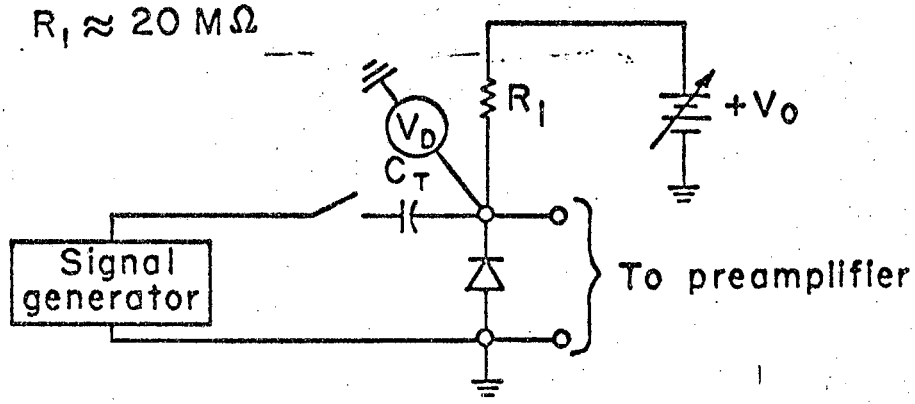

$C_L \approx 100$ pF
$C_D \approx 100$ pF
$C_p \approx 5000$ pF

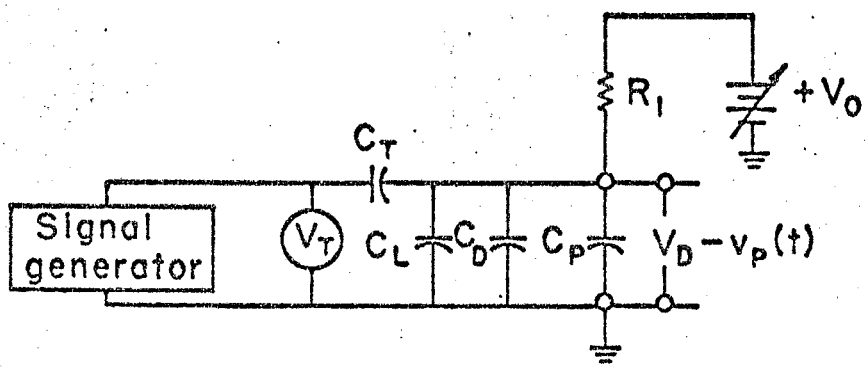

Fig. 2 MUB-6312

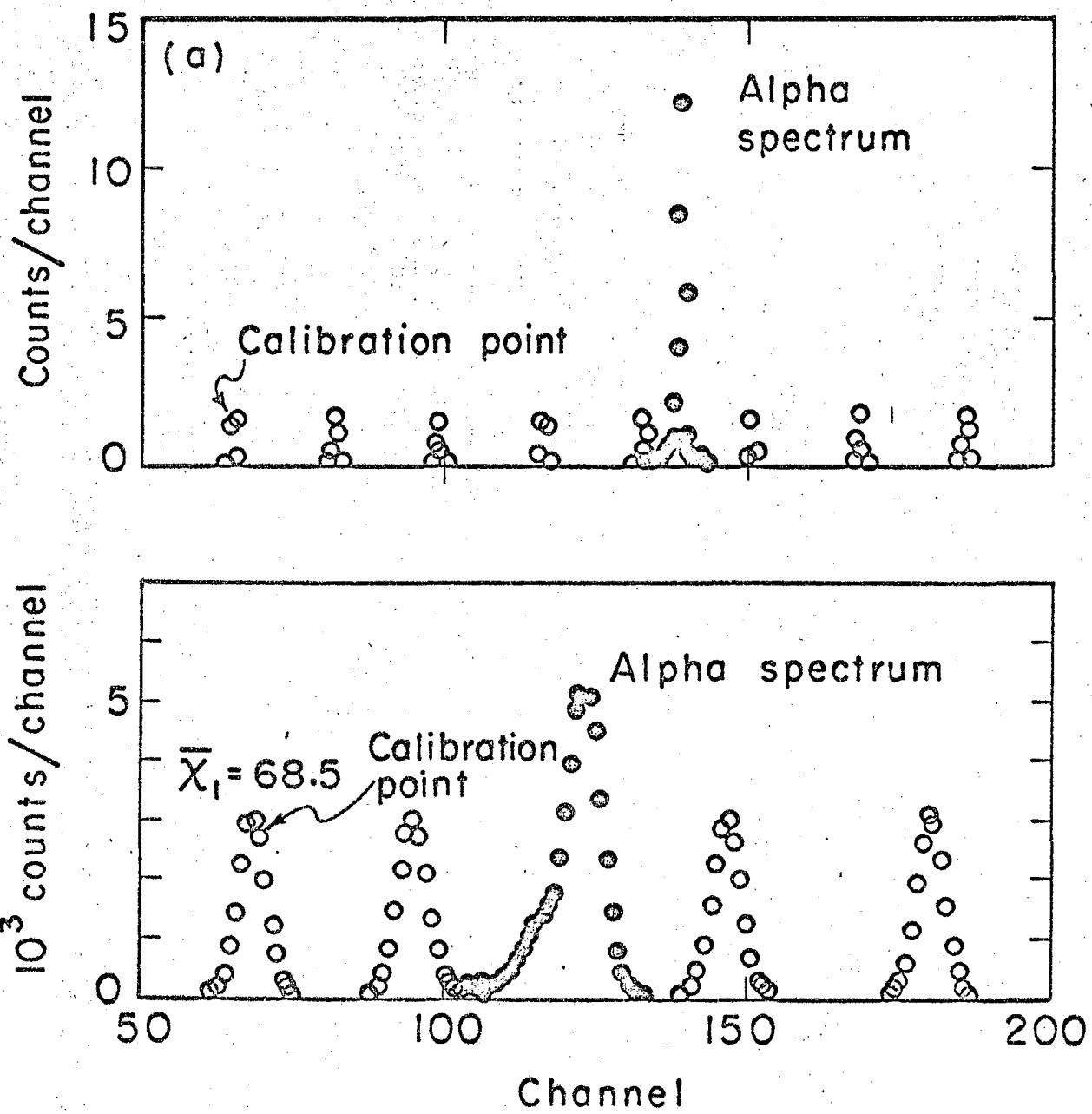

Fig. 3

MUB-6313

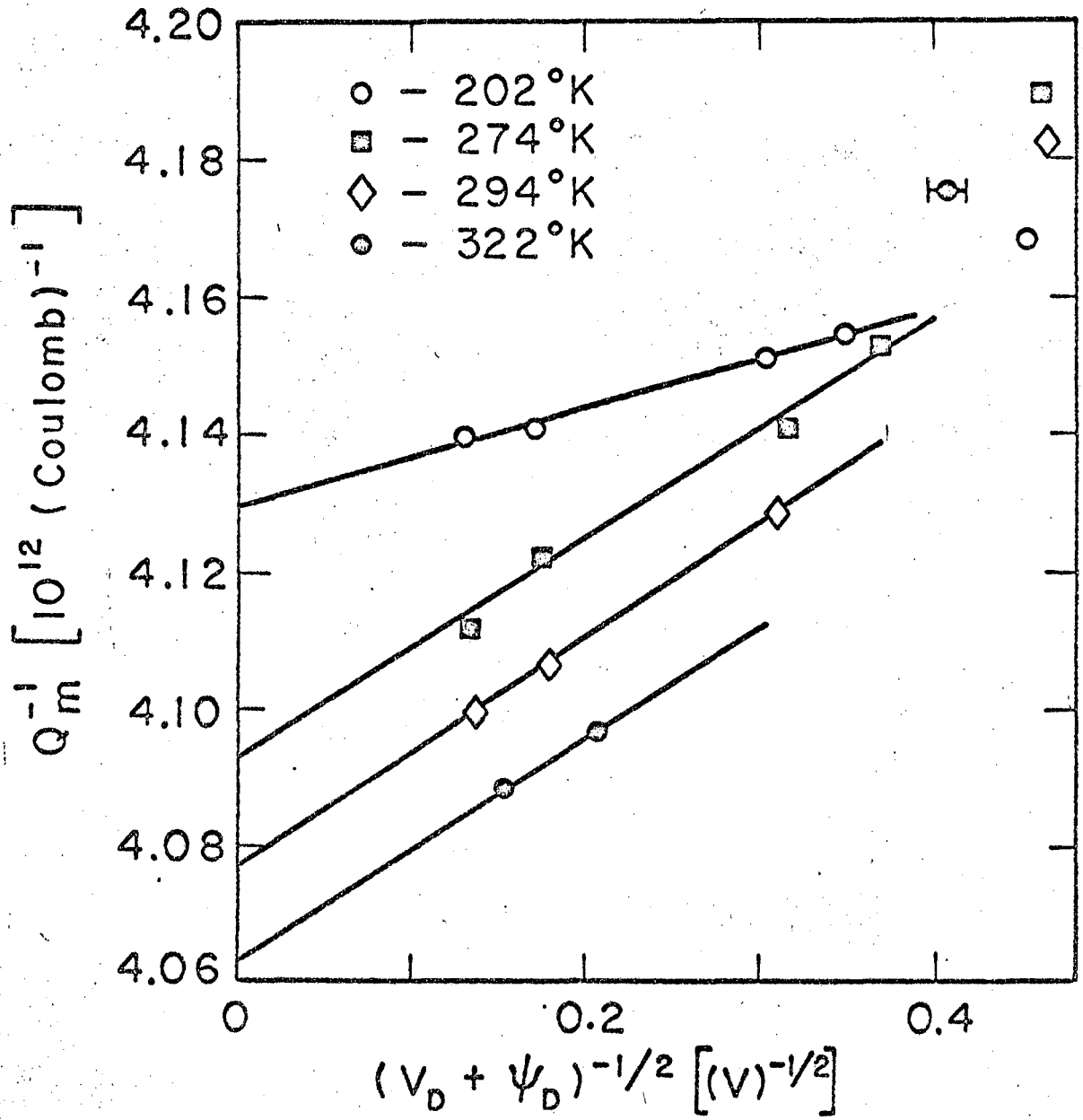

Fig. 4

MUB-6314

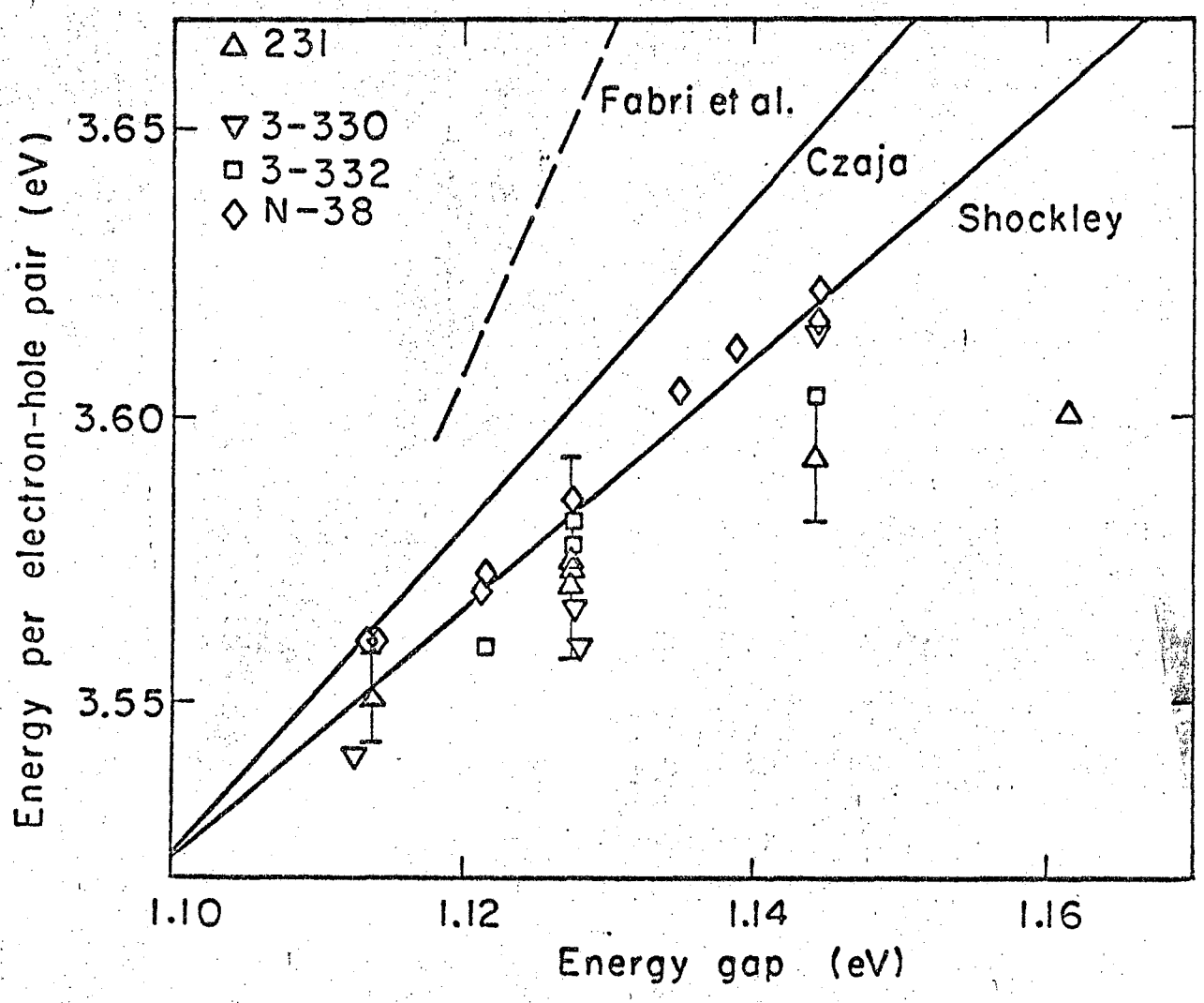

Fig. 5

MUB-6315

$C_L \approx 100\,pF$ $\quad$ $C_T = 0.1\,pF$

$C_D \approx 100\,pF$ $\quad$ $V_0 \lesssim 100\,V$

$C_p \approx 5000\,pF$ $\quad$ $R_1 \approx 20\,M\Omega$

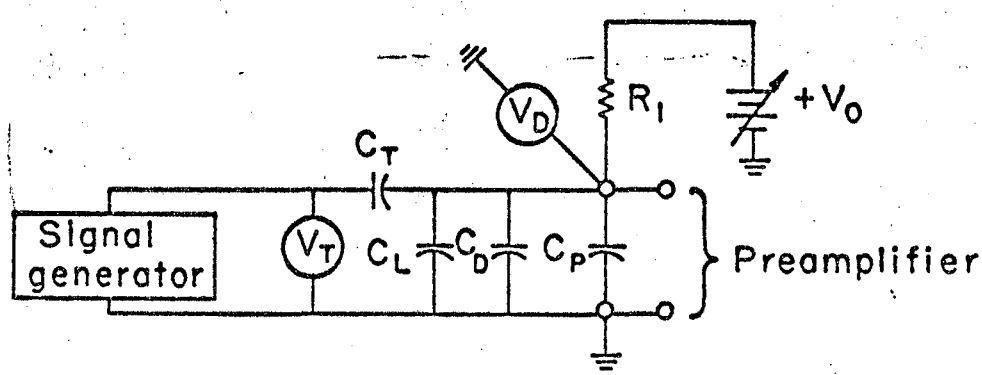

Fig. 6 $\quad$ MUB-8429

This report was prepared as an account of Government sponsored work. Neither the United States, nor the Commission, nor any person acting on behalf of the Commission:

A. Makes any warranty or representation, expressed or implied, with respect to the accuracy, completeness, or usefulness of the information contained in this report, or that the use of any information, apparatus, method, or process disclosed in this report may not infringe privately owned rights; or

B. Assumes any liabilities with respect to the use of, or for damages resulting from the use of any information, apparatus, method, or process disclosed in this report.

As used in the above, "person acting on behalf of the Commission" includes any employee or contractor of the Commission, or employee of such contractor, to the extent that such employee or contractor of the Commission, or employee of such contractor prepares, disseminates, or provides access to, any information pursuant to his employment or contract with the Commission, or his employment with such contractor.