UCRL-16171

University of California

Ernest O. Lawrence Radiation Laboratory

A FAST-RESPONSE PICOAMMETER

TWO-WEEK LOAN COPY

This is a Library Circulating Copy which may be borrowed for two weeks. For a personal retention copy, call Tech. Info. Division, Ext. 5545

Berkeley, California

DISCLAIMER

This document was prepared as an account of work sponsored by the United States Government. While this document is believed to contain correct information, neither the United States Government nor any agency thereof, nor the Regents of the University of California, nor any of their employees, makes any warranty, express or implied, or assumes any legal responsibility for the accuracy, completeness, or usefulness of any information, apparatus, product, or process disclosed, or represents that its use would not infringe privately owned rights. Reference herein to any specific commercial product, process, or service by its trade name, trademark, manufacturer, or otherwise, does not necessarily constitute or imply its endorsement, recommendation, or favoring by the United States Government or any agency thereof, or the Regents of the University of California. The views and opinions of authors expressed herein do not necessarily state or reflect those of the United States Government or any agency thereof or the Regents of the University of California.

Review of Scientific Instruments

UCRL-16171

UNIVERSITY OF CALIFORNIA

Lawrence Radiation Laboratory
Berkeley, California

AEC Contract No. W-7405-eng-48

A FAST-RESPONSE PICOAMMETER

Samuel P. Presley

June 2, 1965

A FAST-RESPONSE PICOAMMETER*

Samuel P. Presley†

Lawrence Radiation Laboratory
University of California
Berkeley, California

June 2, 1965

ABSTRACT

This paper describes a fast-response picoammeter design incorporating a commercially available transistorized differential amplifier. The input circuit uses three transistors and one electrometer tube and has unique features. A guard signal is provided for the reduction of input-cable capacitance. Problems associated with large range resistances are discussed.

INTRODUCTION

Particle accelerators, mass spectroscopy, radiation monitoring, ultra-high-vacuum technology and other fields of research often require measurement of currents from 10^{-6} to 10^{-14} A. For some applications, the relatively slow speed of response of the measuring instrument is a serious limitation when observing transient phenomena. Various instruments are available for currents in this range. At present, all-solid-state circuits using field-effect transistors are limited to currents of 10^{-9} A or greater. The vibrating-reed-capacitor-type instrument can be used down to 10^{-16} or 10^{-18} A. Electrometer-tube-type instruments are used to 10^{-14} A. From 10^{-8} to 10^{-14} A, the electrometer-tube design is usually the best choice when speed of response is important. The vibrating-reed-type instrument is unexcelled for long-term stability, but suffers in response speed.

THEORY OF OPERATION

A simple form of the picoammeter circuit is shown in Fig. 1a. A direct-coupled amplifier with gain -K is connected as shown with the range resistor R_1 providing feedback. The input impedance of the amplifier is assumed to be infinite. A steady-state analysis of the circuit results in

$$e_1 = - e_0/K . \tag{1}$$

Since the input impedance of the amplifier is infinite, all input current must flow through the range resistor R_1, and we have

$$i_1 = - (e_0/R_1) [(K-1)/K] \approx - e_0/R_1 \quad \text{for} \quad K >> 1. \tag{2}$$

The effective input impedance is

$$R_{in} = e_1/i_1 = R_1/K . \tag{3}$$

Use of negative feedback reduces the input impedance and the input voltage drop by a factor equal to the amplifier gain.

For the transient-response analysis, the transfer function of the system is given by

$$E_0(s)/I_1(s) = -R_1\left\{[sR_1(C_1+C_2)] + 1\right\}\left\{sR_1[(C_1+C_2)/K] + (1+K)/K\right\}^{-1}$$

$$\approx -R_1[sR_1(C_1+C_2) + 1]\left\{sR_1[C_1+(C_1+C_2)/K]+1\right\}^{-1} , \qquad (4)$$

where s is the Laplace-transform variable. This is the equation of a first-order system with a time constant

$$T = R_1\left\{C_1 + [(C_1+C_2)/K]\right\} . \qquad (5)$$

Note that the capacity $C_1 + C_2$ is reduced by the gain K, but one term is left which is independent of K. To increase the response speed, for a given value of R_1, we must make C_1 and C_2 small and K large. The order of magnitude of the time constant R_1C_1 for $C_1 = 10^{-13}$ F and $R_1 = 10^{14}\ \Omega$ is 10 sec.

Praglin and Nichols have described a method which uses a lag network in the feedback path to compensate for the effect of R_1C_1.[1] The modified circuit is shown in Fig. 1b. The transfer function of the feedback path is

$$H(s) = (sR_1C_1 + 1)/\left\{(sR_3C_3 + 1)\left[sR_1(C_1 + C_2) + 1\right]\right\} \qquad (6a)$$

which for $R_1C_1 = R_3C_3$ simplifies to

$$H(s) = [sR_1(C_1 + C_2) + 1]^{-1} . \qquad (6b)$$

With the compensation network given by Eq. (6), the system transfer function becomes

$$E_0(s)/I_1(s) = \left\{-[sR_1(C_1+C_2) + 1]\ R_1\right\} / [sR_1(C_1 + C_2)\ K^{-1} + 1] . \qquad (7)$$

The time constant of the system is now

$$T = R_1(C_1 + C_2)/K . \qquad (8)$$

All previous analysis has been based on idealized conditions--(1) the system is noise free, (2) the amplifier has a gain of -K which is frequency independent,

and (3) the range resistor is represented by an ideal resistor shunted by a capacitor. An excellent analysis of system design when noise is considered is given by Praglin and Nichols.[1] The result is that, given a minimum acceptable signal-to-noise ratio, there is an optimum amplifier gain K. Increasing K beyond this value degrades the signal-to-noise ratio.

The amplifier used in the system to be described is one of a class of "operational" amplifiers. It has a controlled roll-off in response of 6 dB/octave extending past the frequency of unity gain. The transfer function of the amplifier is given approximately by

$$KG(s) = -K/(sT_a + 1) , \qquad (9)$$

where

$$T_a = 1/2\pi f_a ,$$

and

$$f_a = 50 \text{ Hz} .$$

When values of range resistor R_1 are very large (10^{10} to $10^{14}\Omega$), the effect of distributed capacitance to ground becomes important. The resistor with distributed capacitance to ground becomes a distributed RC delay line with a transfer function that is not easy to treat analytically. Under some conditions, the system can only be stabilized by increasing the value of C_1 or decreasing the gain K, both of which result in slower response. The simple method of adding a lag network to compensate for the effect of C_1 is not very effective when the distributed capacitance is too large.

Three methods can be used to reduce the distributed capacitance. One obvious way is to mount the resistor far from surrounding objects. A second method establishes the desired electric field which matches the gradient along

the resistor by mounting the resistor within a glass tube coated internally with a resistive film. Depositing the film directly on the glass exterior of the resistor is not very practical. When dealing with resistors of 10^{11} to $10^{14}\,\Omega$, one finger print in the wrong place can drastically alter the resistance value. In a third method (Fig. 2a) the resistor passes through parallel metal planes. The plane at the low-potential (input) end of the resistor is grounded. The high-potential end of the resistor and the plane through which it passes are connected to the output of the amplifier.

The distributed capacitance is eliminated if (1) the planes have linear dimensions large compared to the spacing d, so that the gradient at the center is constant; (2) dimension (b-a) is much smaller than dimension d; (3) the resistor is uniform along its length; and (4) the end of the resistor and the plane through which it passes are at the same ac potential. Condition (1) is determined by available physical space and the maximum capacitance load on the amplifier output. Satsifying (2) is more difficult when commercially available resistors such as the Victoreen type are used, since the resistance element is sealed in a glass tube. Condition (3) also depends on the resistor manufacturer. It is a practice to cut a spiral groove in the resistance element (usually deposited carbon) to adjust the resistance value. In the circuit shown in Fig. 2a, condition (4) is nearly satisfied. The low-potential end of the resistor is within 50 to 200 μV of ground potential for large values of gain K. When the range resistor is operated as shown in Fig. 2a, one can calculate an approximate value for the capacity shunting this resistor by using

$$C = e_0 e_r A/d \,. \qquad (10)$$

For Victoreen resistors e_0 is $10^{-9}/36\pi$ F/meter, e_r is assumed to be 2, A is $\pi a^2/4$, where a is 0.2 cm, and d is 1.25 cm. Substituting these values in Eq. (10) gives $C \approx 5\times10^{-15}$ F.

PRACTICAL DESIGN

General Description

The final design is shown in block form in Fig. 2b. The input block uses three transistors and the electrometer tube in a feedback circuit that acts similarly to a cathode follower with a gain of approximately 0.99. The input circuit drives the Burr-Brown Research Corporation model-1504 differential amplifier and the guard emitter follower. The current source to be measured is connected to the instrument through a triaxial cable. The outer cable shield is physically grounded, and the inner shield is driven by the guard emitter follower. The voltage gain from the input to the guard output is approximately 0.98. This reduces the effective capacitance of the inner cable to 2% of the nonguarded value. The range resistor is mounted between parallel planes as discussed in the previous section.

The supply-voltage requirements for the instrument are +18, -18, and +24 V. Zener diodes provide coarse regulation of the supply and are followed by transistorized series regulators. The regulation is approximately 4 p. p. m. for transient line-voltage changes and approximately 200 p. p. m. for long-term line-voltage variations.

Design Analysis

For purposes of analysis, the circuit of Fig. 3a is used. The Burr-Brown amplifier is treated as having a simple pole at $1/T_a$. The gain of the amplifier is unity at 1 MHz. The poles of the input circuit are ignored, since they are well beyond MHz. For $K >> 1$ the transfer function of the system is

$$\frac{E_0(s)}{I_1(s)} = \frac{-R_1}{s^2\left[\frac{T_a R_1 C'}{K}\right] + s\left\{\left[R_1(C_1+C'/K)\right] + T_a/K\right\} + 1} . \qquad (11)$$

Here K is the dc open-loop amplifier gain, C_1 is the capacitance from output to input of the amplifier, C_2 is the capacitance from input to ground,

$C' = C_1 + C_2$, and $T_a = 1/\omega_a = 1/2\pi f_a$, where f_a is the frequency at which the amplifier gain is 3 db below the dc value. The primary aim of this design study is to achieve fast response. The fastest response is obtained when the poles of Eq. (11) are complex. For complex poles, Eq. (11) is identified with the form

$$F(s) = [\, s^2/\omega_n^{\,2} + (2\rho/\omega_n)\, s + 1]^{-1} , \tag{12}$$

where the natural frequency in rads/sec is

$$\omega_n = (K/T_a\, R_1 C')^{1/2} \tag{13}$$

and the damping factor is

$$\rho = [\,(K/T_a R_1 C')^{1/2}/2]\, \left\{ R_1[\, C_1 + (C'/K)] + T_a/K \right\} . \tag{14}$$

For $\rho < 1$ Eqs. (12), (13), and (14) apply. For $\rho > 1$ the poles of Eq. (11) become simple, and we use the form

$$F(s) = (sT_1 + 1)\,(sT_2 + 1)^{-1} . \tag{15}$$

Only the case of complex poles is considered here.

Damping-Factor Analysis

From Fig. 4 we see that the best response time with nominal overshoot is obtained for $\rho = 0.7$ (step-function input). If the instrument is to be multi-range and general purpose, then the fact that ρ is a function of R_1 and C' must be investigated. The value of R_1 is determined by the range desired; $C' = C_1 + C_2$ depends on the particular application and the external-circuit capacitance.

Taking $\partial\rho/\partial R_1 = 0$, we obtain

$$R_{1(\rho\ \min)} = T_a/[\, K(C_1 + C' K^{-1})] . \tag{16}$$

Substituting in Eq. (14) gives

$$\rho_{min} = [(C_1/C') + K^{-1}]^{1/2} \quad . \tag{17}$$

This is an interesting result. The term $1/K$ is negligible for large K. Capacitance C' is the sum of $C_1 + C_2$, and C_2 depends on the capacitance of the external circuit. For the particular value of R_1 given by Eq. (16), C_1 must equal C_2 in order to have a damping factor of 0.7. A value of C_1 less than this results in more overshoot.

Taking $\partial\rho/\partial C' = 0$ and solving for $C'_{\rho\,min}$, we have

$$C' = KC_1 + (T_a/R_1) \tag{18}$$

Substituting (18) in Eq. (14), we obtain

$$\rho_{min} = [(R_1C_1/KT_a) + K^{-1}]^{1/2}. \tag{19}$$

These results indicate that control of the damping is required, since the external-circuit capacitance usually is not known in advance.

Circuits

In the schematic diagram of the input circuit, Fig. 3a, V_1, Q_1, and Q_2 are connected in a unity feedback arrangement, and Q_3 is a constant-current source of 7.5 mA for the operation of the filament. Operating potentials for V_1 and Q_1 are derived from a Zener diode in series with the constant-current source. The frequency response is flat to well beyond 1 Mc/s.

Analysis of the circuit is aided by the block diagram shown in Fig. 3b. Although this circuit representation is not exact, it gives good results. Solving for the small signal gain we obtain

$$e_0/e_i = 1 + (gm\ h_{fe1}\ h_{fc2}\ R_{eq})^{-1} , \tag{20}$$

where gm is the transconductance of V_1, h_{fe1} is the common-emitter forward-current gain of Q_1, h_{fc2} is the common-collector forward-current gain of Q_2, and R_{eq} is the equivalent-resistance load at the output of Q_2. Substituting typical values gm = 20 μmhos, $h_{fe1} = 15$, $h_{fc2} = 150$, and $R_{eq} = 1500$ ohms, we have $e_0/e_i = 0.99$.

Results

Testing the step-function response of the instrument proved to be a problem. A voltage source and a large resistor can not be used (except for steady-state measurements) because of distributed capacitance effects. Step functions of curent can be generated by either (a) modulating the light input to a photocell, or (b) coupling a triangular-wave voltage generator to the input through a very small capacitor. Initially, a current source using method (a) was constructed. To reduce the dark current (approximately 4×10^{-11} A at room temperature) it was necessary to cool the photocell to liquid-nitrogen temperature. The noise level was found to be so high that no real measurements could be obtained at currents less than 10^{-9} A. Much later, the extreme sensitivity to room noise was traced to a sheet of Mylar near the photocell.

All final measurements of response were made using a triangular-function generator. An analysis of this method is given in the article by Praglin and Nichols.[1] If the voltage source is large and the capacitance coupling to the instrument is small, the current through the capacitor is very nearly a square wave.

From the results of the damping-factor analysis, the following items were anticipated and found to be true:

(1) For very high values of range resistance, the shunt capacitance of the resistor is dominant in determining the speed of response. Without compensation, the circuit may be overdamped.

(2) For lower values of the range resistor, the circuit may be underdamped. To improve the damping, a capacitor across the resistor may be required.

(3) For any range, as the capacitance loading the input is increased up to the value given by Eq. (18), the damping factor decreases. A variable control of the damping is required if the instrument is to operate with various input capacitance values.

The response on the ranges from 10^{-10} to 10^{-14} A was found to be overdamped. A lag-compensating network was added in the feedback path as illustrated in the complete schematic, Fig. 5. Components R_3, C_3, and R_4 are part of the compensating network. Capacitor C_d and the variable control R_2 allow adjustment of the damping. Table I gives values of the components for the various current ranges. The response time of the instrument is apparent from the oscillograms of Fig. 6 Figure 7a shows the mechanical arrangement of the complete chassis, and Fig. 7b the input-circuit construction.

FOOTNOTES AND REFERENCES

*This work was done under the auspices of the U. S. Atomic Energy Commission.

†Deceased. Inquiries relating to this work should be directed to Dr. Bob H. Smith.

[1] J. Praglin and W. A. Nichols, IRE Proc. 48, 771 (1960).

[2] I. Pelchowitch and J. J. Zaalberg Van Zelst, Rev. Sci. Instr. 23, 73 (1952).

[3] G. F. Vanderschmidt, Rev. Sci. Instr. 31, 1004 (1960).

[4] J. C. Gille, M. J. Pelegrin, and P. Decauline, Feedback Control Systems (McGraw-Hill Book Publishers Inc., New York, 1959).

[5] C. J. Savant, Basic Feedback Control System Design (McGraw-Hill Book Publishers Inc., New York, 1958).

Table I. Component values for various current ranges (see Fig. 5).

Current range (amperes)	R_1 (Ω)	C_1 (pF)	R_3 (MΩ)	C_3 (μF)	R_4 (kΩ)
10^{-14}	10^{14}	0	2	7.0	12
10^{-13}	10^{13}	0	1	2.0	9
10^{-12}	10^{12}	0	1	0.26	3
10^{-11}	10^{11}	0	0.00	0.28	1.4
10^{-10}	10^{10}	0	0.00	0.03	0.3
10^{-9}	10^{9}	0	0	0	∞
10^{-8}	10^{8}	0	0	0	∞
10^{-7}	10^{7}	4.7	0	0	∞
10^{-6}	10^{6}	25	0	0	∞
10^{-5}	10^{5}	100	0	0	∞
10^{-4}	10^{4}	470	0	0	∞

FIGURE LEGENDS

Fig. 1. Picoammeter circuits. (a) Simple circuit; (b) modified circuit using a lag network in the feedback path to compensate for the effect of R_1C_1.

Fig. 2. Examples of methods used to reduce the distributed capacitance. (a) The electric field around R may be made uniform by means of parallel metal plates (a). The effective input-cable capacitance can be reduced by the guard technique (b).

Fig. 3. (a) Schematic with (b) equivalent circuit used for analysis.

Fig. 4. Variation of response time and overshoot with damping factor ρ.

Fig. 5. Schematic of complete instrument.

Fig. 6. Response of instrument to current square waves.

Fig. 7. Photographs of (a) complete instrument and (b) input-circuit construction.

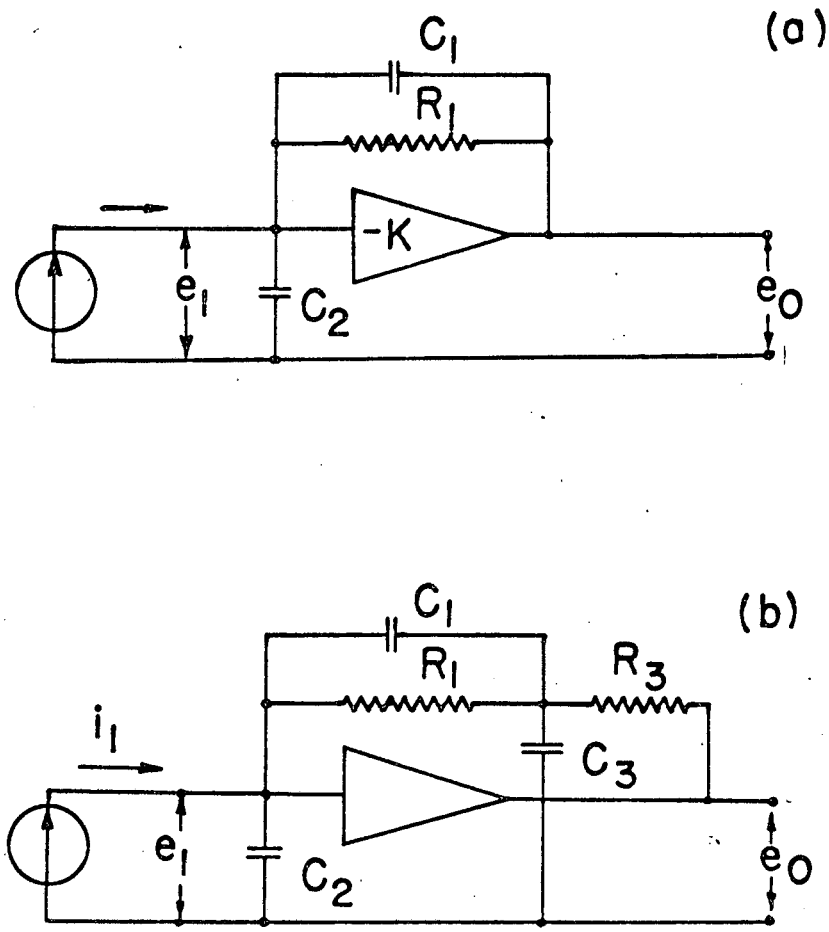

Fig. 1

MUB-8250

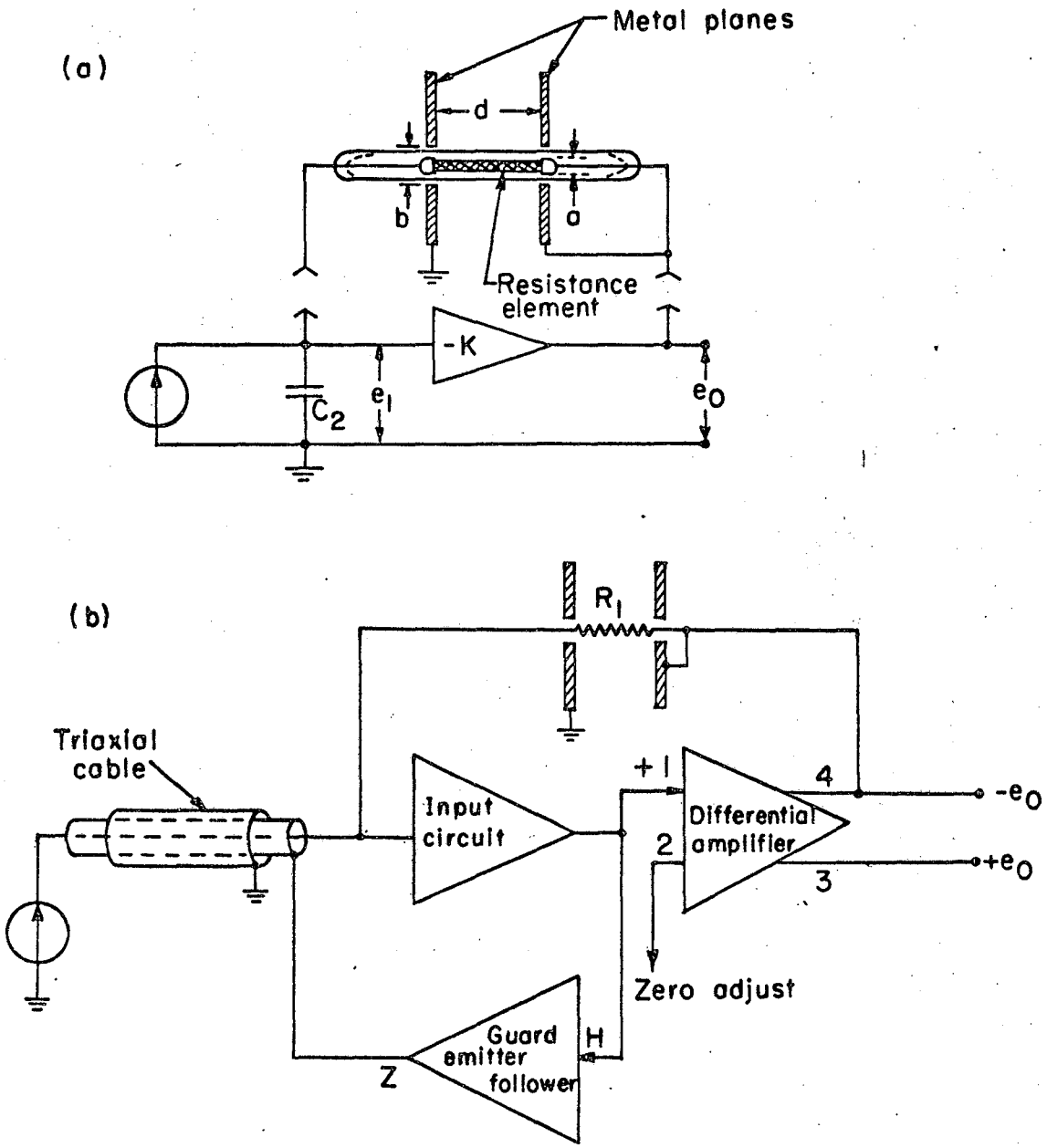

Fig. 2

MUB-8251

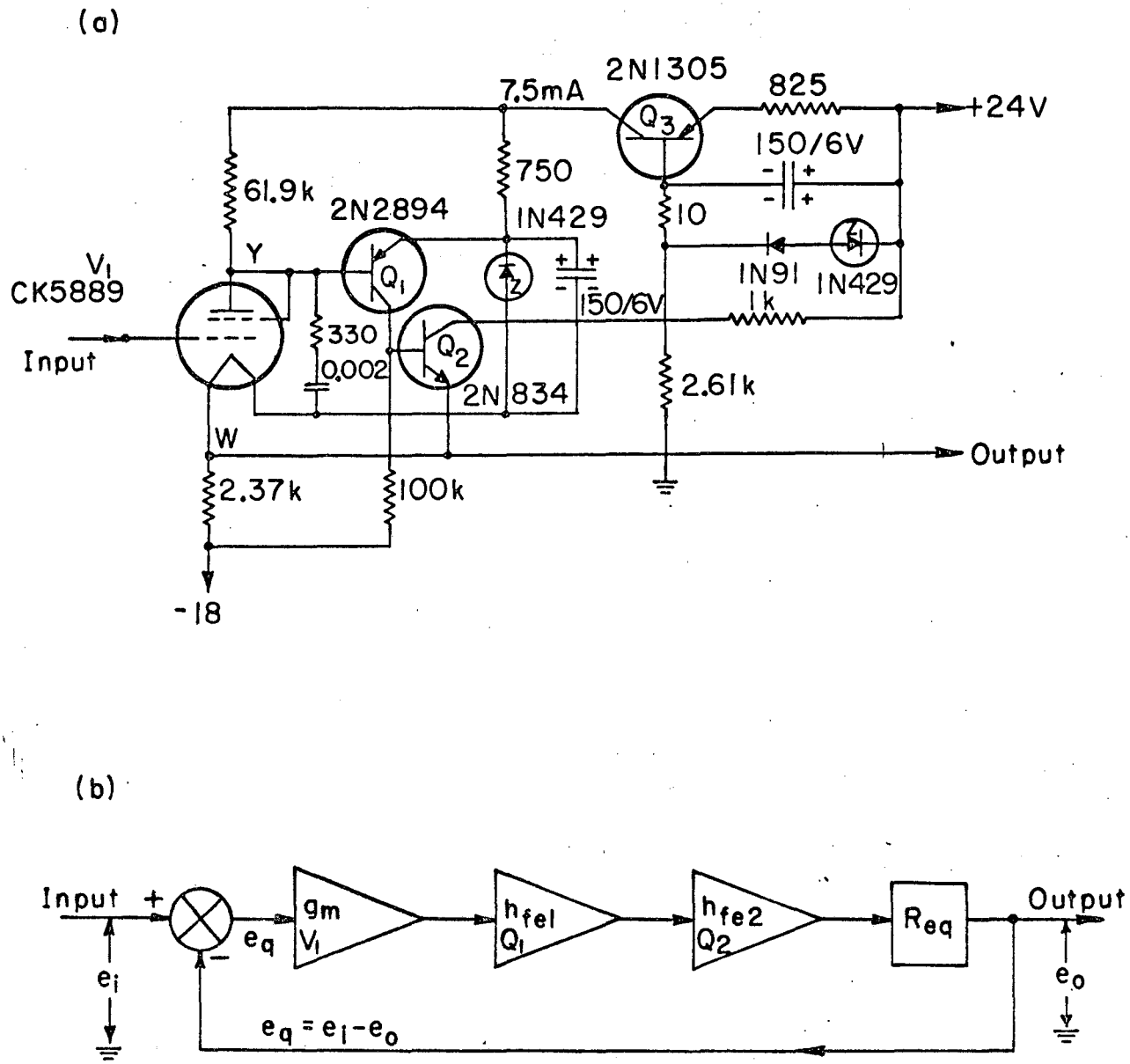

Fig. 3

MUB-8252

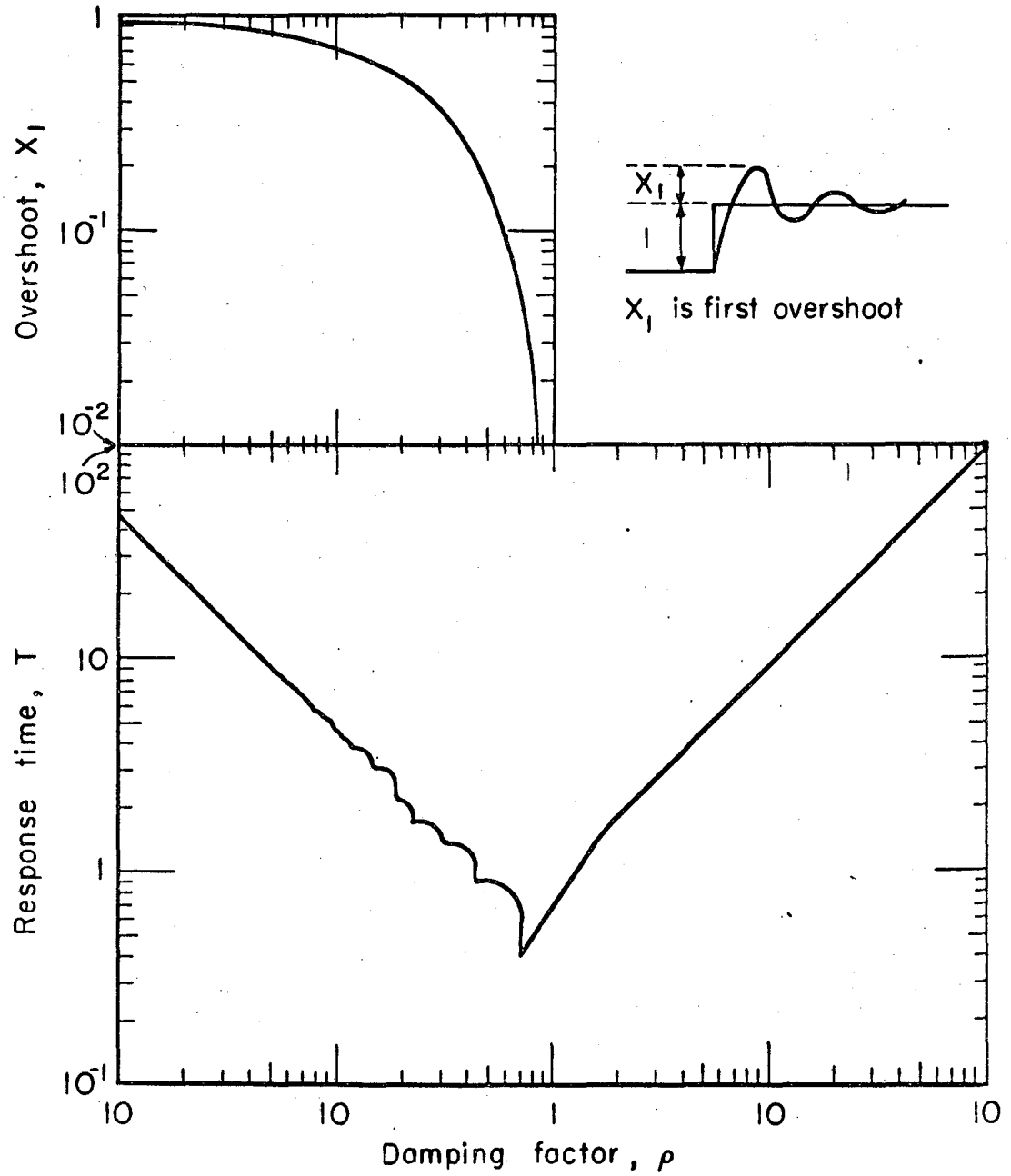

MUB-8253

Fig. 4

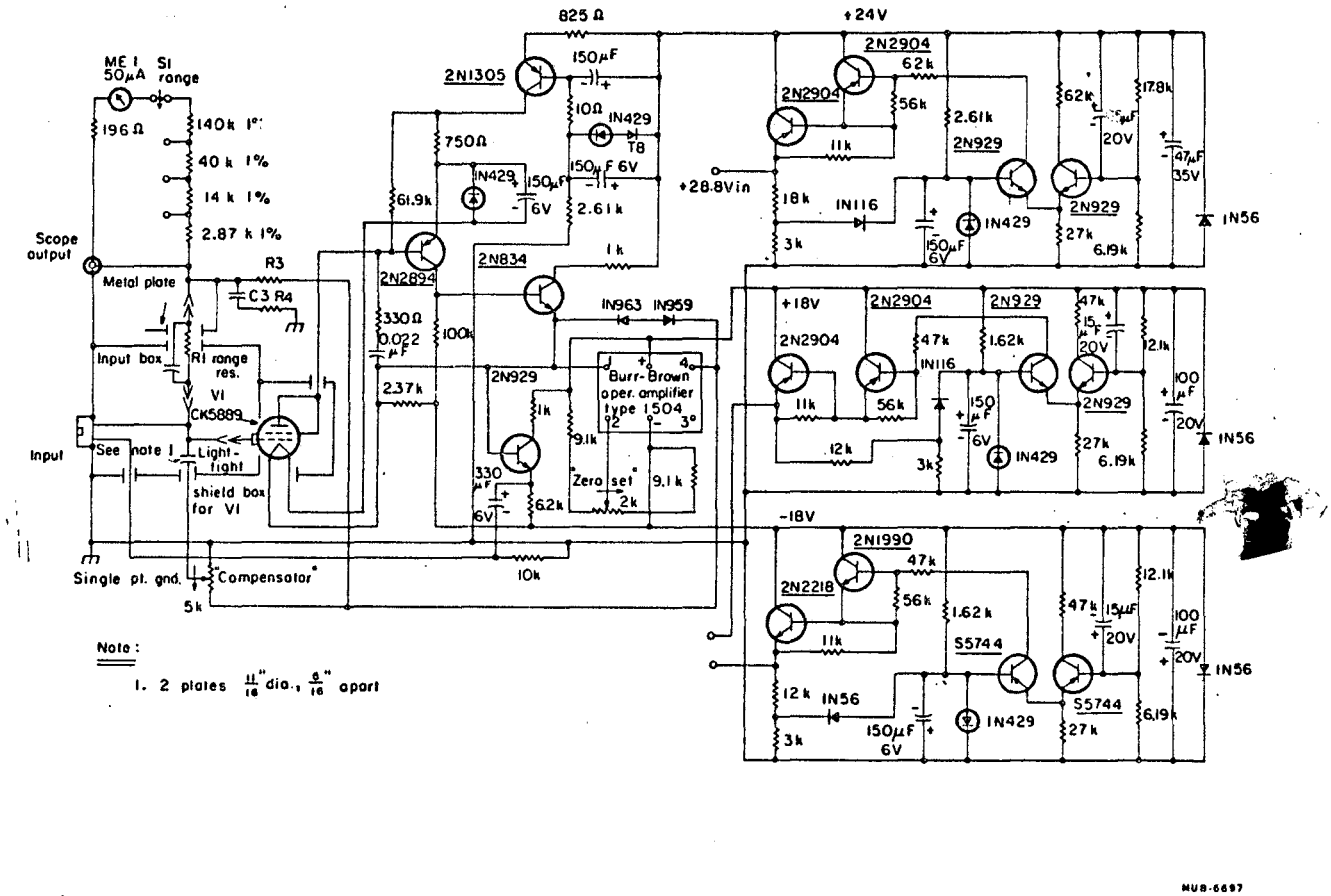
ME I 50μA
S1 range
196 Ω
140k 1%
40 k 1%
14 k 1%
2.87 k 1%
Scope output
Metal plate
R3
C3 R4
Input box
R1 range res.
V1
CK5889
Input
See note 1
Light-tight shield box for V1
Single pt. gnd.
"Compensator"
5k
825 Ω
2N1305
150μF
10Ω
IN429
T8
750Ω
150μF 6V
61.9k
2.61k
2N2894
2N834
1k
330Ω
0.022 μF
100k
IN963
IN959
2.37k
2N929
1k
9.1k
Burr-Brown oper. amplifier type 1504
330 μF
6V
62k
"Zero set"
2k
9.1k
10k
+24V
2N2904
62k
56k
11k
2.61k
2N929
+28.8Vin
18k
IN116
3k
150μF 6V
IN429
62k
20V
17.8k
47μF 35V
27k
6.19k
IN56
+18V
47k
1.62k
15μF 20V
2.1k
100 μF 20V
12k
-18V
2N1990
2N2218
S5744
12k
150μF 6V
Note:
1. 2 plates 11/16" dia., 3/16" apart
MUB-6697

Fig. 5

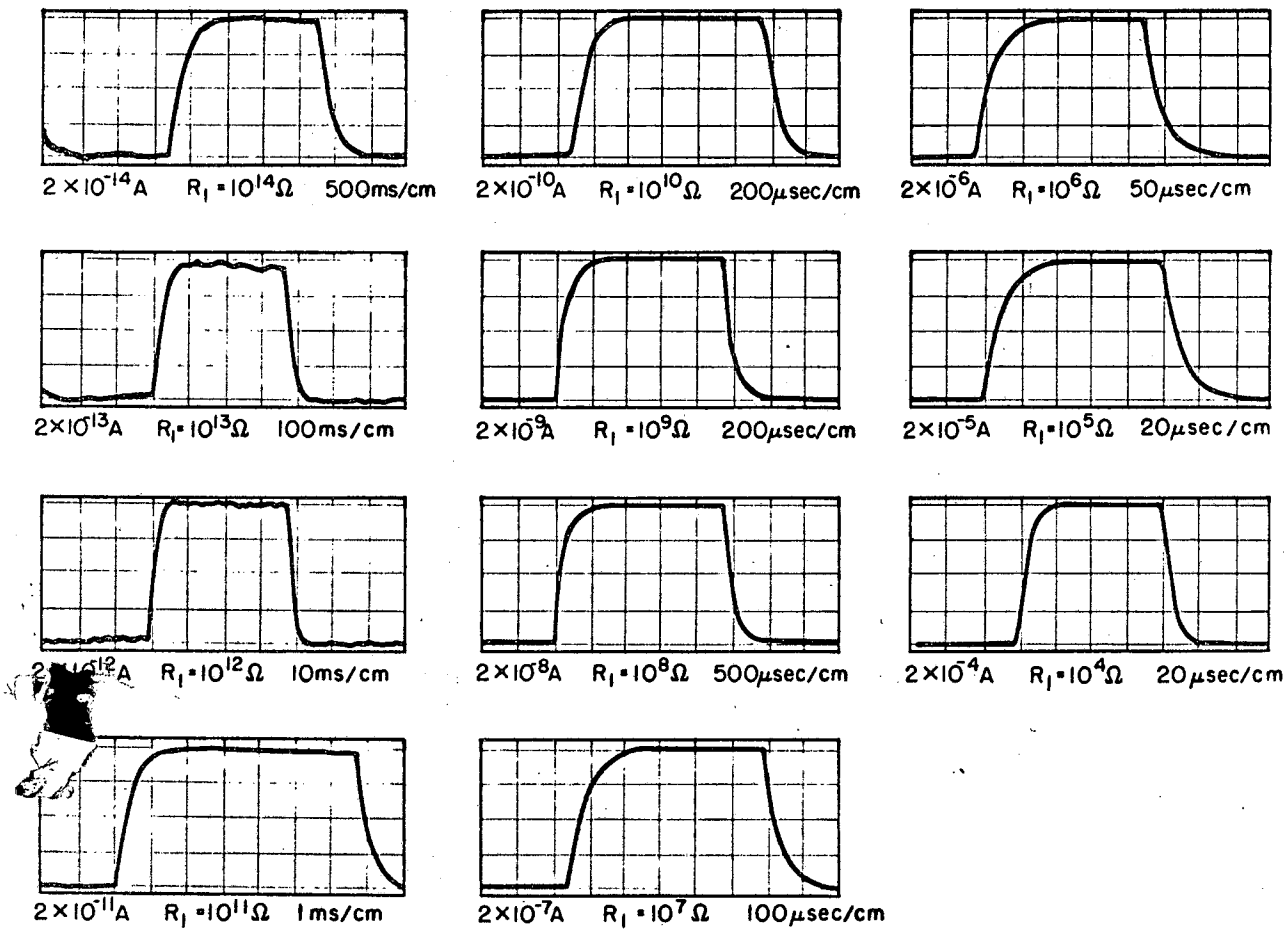
2 × 10⁻¹⁴A R₁ = 10¹⁴Ω 500ms/cm
2×10⁻¹⁰A R₁ = 10¹⁰Ω 200μsec/cm
2×10⁻⁶A R₁ = 10⁶Ω 50μsec/cm
2×10⁻¹³A R₁ = 10¹³Ω 100ms/cm
2×10⁻⁹A R₁ = 10⁹Ω 200μsec/cm
2×10⁻⁵A R₁ = 10⁵Ω 20μsec/cm
R₁ = 10¹²Ω 10ms/cm
2×10⁻⁸A R₁ = 10⁸Ω 500μsec/cm
2×10⁻⁴A R₁ = 10⁴Ω 20μsec/cm
2×10⁻¹¹A R₁ = 10¹¹Ω 1ms/cm
2×10⁻⁷A R₁ = 10⁷Ω 100μsec/cm
MUB-8254

Fig. 6

(a)

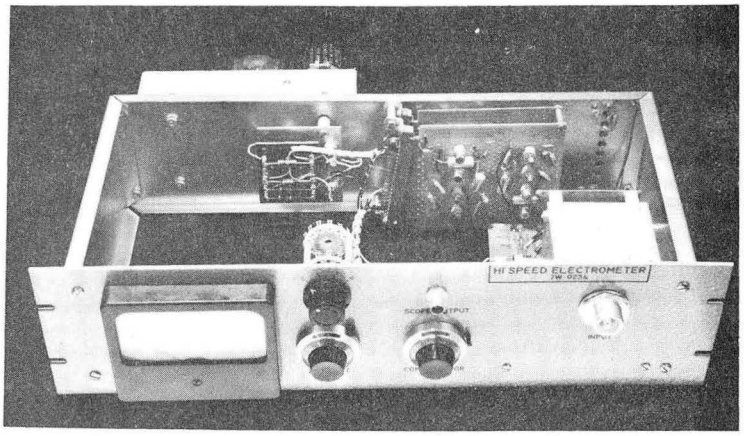

(b)

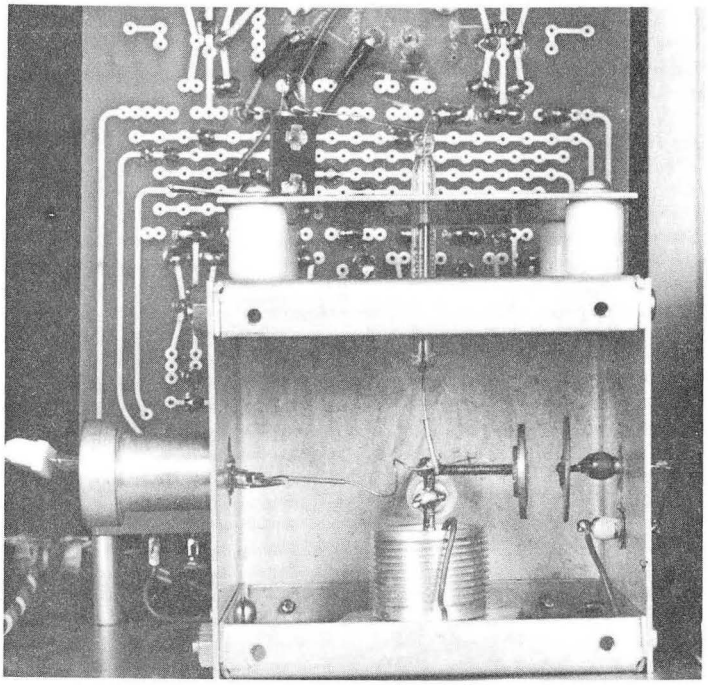

ZN-5209

Fig. 7

This report was prepared as an account of Government sponsored work. Neither the United States, nor the Commission, nor any person acting on behalf of the Commission:

A. Makes any warranty or representation, expressed or implied, with respect to the accuracy, completeness, or usefulness of the information contained in this report, or that the use of any information, apparatus, method, or process disclosed in this report may not infringe privately owned rights; or

B. Assumes any liabilities with respect to the use of, or for damages resulting from the use of any information, apparatus, method, or process disclosed in this report.

As used in the above, "person acting on behalf of the Commission" includes any employee or contractor of the Commission, or employee of such contractor, to the extent that such employee or contractor of the Commission, or employee of such contractor prepares, disseminates, or provides access to, any information pursuant to his employment or contract with the Commission, or his employment with such contractor.