UCRL-16219

University of California

Ernest O. Lawrence Radiation Laboratory

BEVATRON BEAM SPILL BY AMPLITUDE MODULATION

TWO-WEEK LOAN COPY

This is a Library Circulating Copy which may be borrowed for two weeks. For a personal retention copy, call Tech. Info. Division, Ext. 5545

Berkeley, California

DISCLAIMER

This document was prepared as an account of work sponsored by the United States Government. While this document is believed to contain correct information, neither the United States Government nor any agency thereof, nor the Regents of the University of California, nor any of their employees, makes any warranty, express or implied, or assumes any legal responsibility for the accuracy, completeness, or usefulness of any information, apparatus, product, or process disclosed, or represents that its use would not infringe privately owned rights. Reference herein to any specific commercial product, process, or service by its trade name, trademark, manufacturer, or otherwise, does not necessarily constitute or imply its endorsement, recommendation, or favoring by the United States Government or any agency thereof, or the Regents of the University of California. The views and opinions of authors expressed herein do not necessarily state or reflect those of the United States Government or any agency thereof or the Regents of the University of California.

Submitted to The Review of Scientific Instruments

UCRL-16219

UNIVERSITY OF CALIFORNIA

Lawrence Radiation Laboratory
Berkeley, California

AEC Contract No. W-7405-eng-48

BEVATRON BEAM SPILL BY AMPLITUDE MODULATION

Fred H. G. Lothrop

September 30, 1965

BEVATRON BEAM SPILL BY AMPLITUDE MODULATION*

Fred H. G. Lothrop

Lawrence Radiation Laboratory
University of California
Berkeley, California

September 30, 1965

ABSTRACT

A more efficient method for the delivery of protons onto Bevatron targets has been devised. This method involves amplitude modulation of the rf accelerating voltage by a closed-loop system that regulates the rate of loss of circulating beam, as observed on a pickup electrode. The efficiency and reliability of this new method are considerably greater than those of previous methods, and the flexibility of proton-delivery control has been enhanced.

INTRODUCTION

Many experiments performed at the Bevatron, a proton synchrotron,[1] involve the use of scintillation counters and spark chambers. After particles have passed through these devices, particle passage is not registered for a brief period known as "deadtime." In order that a minimum number of particles pass during deadtime, it is desirable that the delivery of particle pulses to the experiment be as long and uniform as possible. The delivery (or spill) time available at the Bevatron extends to about one second.

The previous method used for spilling beam during this extended time was to plunge energy-loss fibers[2] into the circulating beam once for each Bevatron pulse (11 pulses per minute). Some of the protons that strike a fiber, having lost sufficient energy, become phase unstable and spiral into a target. These fibers also scattered and interacted with the proton beam, so that only about half of the circulating protons actually struck the target. The spill was controlled by the choice of fiber diameter ($\approx$ 0.003 inch), the spacing between fibers, ($\approx$ 1/2 inch), and the rate at which fibers plunged into the proton beam. Fiber lifetime at current Bevatron beam intensities was approximately a week because of local heating and radiation damage. A new method of achieving extended spills without the attendant disadvantages of the fiber spiller was highly desirable.

A preliminary experiment[3] demonstrated that another method was indeed available, wherein the amplitude of the rf accelerating voltage was modulated according to a feedback signal derived from a beam-pickup electrode in the Bevatron, and the operational system described below was thus developed. The following design requirements were imposed on the electronic beam spiller:

1. The time rate of beam spill is to be constant.

2. The amount of beam spilled is to be adjustable with an accuracy of ±5%.

3. Controls are to provide the choice of spilling a certain percentage of the circulating beam, or of spilling to a fixed amount of circulating beam.

PRINCIPLES OF OPERATION

The electronic beam spiller (EBS) closes a negative feedback loop around a path consisting of the proton beam, the pickup electrode, and the amplitude-modulation portion of the rf accelerating system. A block diagram of the EBS is shown in Fig. 1. Reduction of the amplitude of the accelerating voltage amounts to an increase of the equilibrium phase angle and a reduction in the bucket size and hence the amount of beam available for stable acceleration. The bucket-size reduction carries particles outside the region of stability, and the rising magnetic field of the Bevatron guides them onto a target. Careful control of the bucket size by amplitude modulation thus leads to a controlled flow of particles onto the target. The feedback loop modulates the bucket size in response to the rate at which particles spill out of the synchronous circulating beam.

For this controlled spill, any quantity between 5 and 100% of the circulating beam may be required at a constant spill rate during a specified time interval. Thus, the reference signal must be a ramp with adjustable slope and end-point amplitude. The adjustable slope determines the length of time required for the ramp to reach its end point. The end-point amplitudy determines the amount of beam to be spilled. In Fig. 2 the required reference voltage is shown as a function of time. Here V_0 is the starting-voltage level, which corresponds to the amount of beam circulating in the Bevatron. For a given end-point voltage, or stop voltage, (V_S), two spill

durations are shown, $(t_1 - t_0)$ and $(t_2 - t_0)$; each is obtained by adjustment of the slope of the reference voltage. A change in the stop voltage for a given duration of spill requires that the slope also be changed. As the stop voltage is increased, the slope must be reduced.

The function to be generated is expressed as follows: $V_B = V_0[1 - k(1 - \frac{V_S}{V_0}\frac{\Delta t}{T})]$, where V_B is the desired "beam" analog voltage, $\Delta t(=t - t_0)$ is the spill duration, T is a time constant, and k is a dimensionless slope constant.

The slope constant k permits adjustment of the wave-form slope independent of the other parameters, so that the duration of spill will be an independent variable. When V_S is zero, all the beam will be spilled in a time interval dependent on k and T (T is a constant of the system, and is established during the design phase of the electronic equipment).

The electronics required to generate the refernce signal and to provide the error signal is shown in Fig. 3. The error signal feeds into the amplitude-modulation facility of the Bevatron accelerating system; the error voltage V_E is the sum of three voltages:

$$V_E = V_B - V_0 + k(V_0 - V_S)\frac{\Delta t}{RC} = V_B - V_0[1 - k(1 - \frac{V_S}{V_0})]\frac{\Delta t}{RC} .$$

If the feedback loop were to have infinite gain, V_E would be zero and V_B would then be the desired function. In Fig. 3, the detector supplies to the system a slowly varying voltage that is proportional to the proton beam circulating in the Bevatron. The sample-and-hold circuit extracts the beam-intensity information when the spiller turns on, supplying V_0 to an inverter and an integrator.

As the beam intensity at the Bevatron varies ±20% from pulse to pulse, V_0 will vary accordingly. If a fixed percentage of the beam is to be spilled,

V_S is obtained from V_0. The amount of beam spilled will vary with total beam, but the ratio of spilled beam to total beam will be constant. If, however, a fixed amount of beam is to be left circulating after a spill, V_S is obtained from a Zener-diode reference-voltage source.

COMPLETE UNIT

A block diagram of the complete unit appears in Fig. 4. The flexibility required in Bevatron operation suggested that four channels for the spiller be made. One basic unit with switchable reference levels was accordingly designed. Four sets of controls, each set consisting of "spill time," "level," and "fixed level, off, percent" controls, are switched by relays to the appropriate points in the circuit upon command of one of four timing pips generated by the Bevatron. Five silicon controlled rectifiers (SCR's) are used in an "exclusive or" arrangement, so that triggering any one of them on causes the other four to turn off. Four of the SCR's energize the relays; the fifth turns off the first four SCR's upon command from a comparator circuit. Inclusion of the partial-spill features required the addition of a comparator circuit for turning off the unit when the desired level was reached. The comparator is a high-gain summing amplifier that operates SCR flip-flops when the sum of the reference ramp, the sample and hold, and the stop voltages is zero. The amplifier moves from one saturated state to the other, producing a positive spike that triggers SCR5 on.

Proton-beam information is obtained from pickup electrodes at a 2.5-Mc rate. However, 2.5 Mc is the frequency of the fundamental component of the information, and harmonics up to the tenth and higher are present. Envelope detection of the wave form would result in erroneous indications of the proton-beam intensity, since the harmonic content of the signal changes with Bevatron operating conditions, and the amplitude of the electrode wave-form is dependent

on the harmonic content of the signal. Therefore, since the fundamental component amplitude gives a more reliable indication of beam intensity, the first stage in the detector is an integrating amplifier, which serves to filter and average the harmonic content of the beam signal. An emitter follower and power amplifier supply a 2.5-Mc signal to a full-wave diode detector. The output of the detector is filtered and sent first to the sample-and-hold circuit and thence to the summing amplifier.

The sample-and-hold circuit consists of a small, high-gain operational amplifier normally fed back so that it has a gain of -1. A 0.1 microfarad capacitor is connected around the feedback resistor. This amplifier monitors the output of the detector until a relay actuated by the SCR's disconnects the resistor from the input of the amplifier, leaving only the capacitor in the feed-back circuit. The amplifier now maintains the charge in the capacitor. This circuit is entirely satisfactory for the short times involved in the operation of the spiller.

A trigger pulse from the Bevatron timing circuits turns on the appropriate SCR and its relays, enabling the particular spill-time and spill-level controls, and unclamping the ramp generator by turning off SCR5 and opening the relay around the ramp-generator feedback path. Turning off SCR5 also closes a relay in the output circuit. The electronic switch in the output circuit is closed when one of the other SCR's is on.

The ramp generator and comparator circuits make use of small high-gain operational amplifiers, as do the output amplifiers and the inverter. These amplifiers, which occupy about 2 cubic inches of space, are commercial units with a rated gain-bandwidth product of 100 Mc/sec.

Loop gain for the feedback system, as well as phase compensation, is provided by the compensating amplifiers in the output network. The loop gain is difficult to assess, because the spiller seems to work best in a

switching or oscillating mode; best guess is that the loop gain is around 50. The error signal to the amplitude modulator of the system is not a smooth line, but consists of rapid (about 2 to 10kc) oscillations between "full on" and "full off" conditions of the system. Efforts to remove these oscillations resulted in reduced performance of the spiller.

PERFORMANCE

The design criteria for the electronic beam spiller have been very well fulfilled by the unit described; controlled spills with reproducibility of ± 1% have been regularly attained. The unit is all solid state, minimizing power and space requirements in the main control room of the Bevatron. The only malfunctions occurred when the unit was mounted at an angle greater than that allowed for reliable operation of the small mercury relays used.

Figure 5 is a photograph of the rectified pickup electrode signal and the proton-beam spill as monitored on a Cerenkov counter near an exit port of the Bevatron. Beam spill at the time this picture was taken was on "flattop,"—i.e., at constant high proton energy—with the Bevatron magnet held very nearly at fixed field. During flattop operation, a constant-energy spill may be obtained for almost one second with a small amount of magnet ripple. Because of the low time-rate-of-change of field and consequent large stability regions and slow spiral in time of the protons, two spillers are used in cascade. One is used briefly for rapid initiation of the spill; the second is used to deliver the beam over the rest of the allowable spill period. Notice that the electrode signal is a relatively smooth straight line and the Cerenkov counter signal approaches a rectangular shape. Similar spills of about 300 milliseconds duration may be obtained in the normal Bevatron pulsing mode, without flattop, but the ripple content of such spills is higher because ripple-suppression circuits are not in operation.

Figure 6 is a photograph of the completed beam spiller.

ACKNOWLEDGMENTS

The work described in this paper was initiated by Kenneth C. Crebbin. Lorenzo C. Eggertz assisted in the construction of a prototype model and John J. Barale was responsible for design refinements and fabrication of the final unit. Helpful discussions with Glen R. Lambertson clarified some of the design problems.

FOOTNOTES AND REFERENCES

*This work was performed under the auspices of the U. S. Atomic Energy Commission.

1. William M. Brobeck, Design and Construction of the Bevatron, Lawrence Radiation Laboratory Report UCRL-3912, September 1957 (unpublished).
2. Al Garren, Long-Spill String Target, Lawrence Radiation Laboratory Bevatron Report BeV-646, June 8, 1961 (unpublished).
3. Kenneth C. Crebbin, (Lawrence Radiation Laboratory), private communication, 1964.

FIGURE CAPTIONS

Fig. 1. Electronic beam spiller feedback loop. The pickup electrode produces a voltage proportional to the amount of beam circulating in the Bevatron.

Fig. 2. Reference voltage as a function of time. Two spill lengths are shown for $V_S/V_0 = 0.4$, and two spill quantities are shown for a spill length corresponding to t_2.

Fig. 3. Basic block diagram of reference generator for beam spiller.

Fig. 4. Block diagram of the complete four-channel beam spiller. The basic unit of Fig. 3 is augmented by four sets of switched variable reference voltages.

Fig. 5. Top trace is detector output. Bottom trace is Cerenkov counter signal. There is a delay in the start of the spill due to Bevatron operating conditions. The structure on the counter signal is caused by Bevatron magnet ripple. Vertical sensitivity is 0.5-V/cm for both traces. Sweep speed is 100 msec/cm.

Fig. 6. The complete four-channel beam spiller. Solid-state circuitry and printed circuits are used throughout. The unit fits a standard rack 19 inches wide, and the panel height is 3.5 inches.

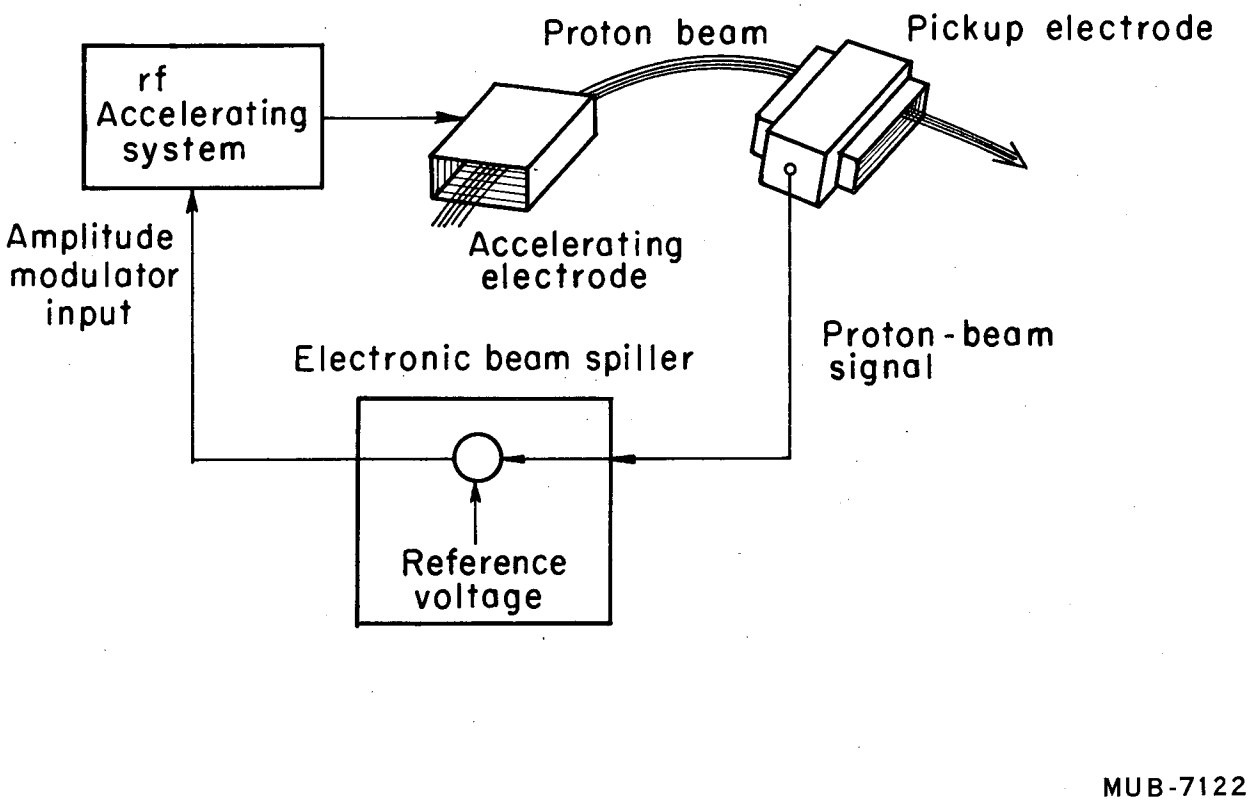
Proton beam
Pickup electrode
rf
Accelerating
system
Amplitude
modulator
input
Accelerating
electrode
Proton-beam
signal
Electronic beam spiller
Reference
voltage
MUB-7122

Fig. 1

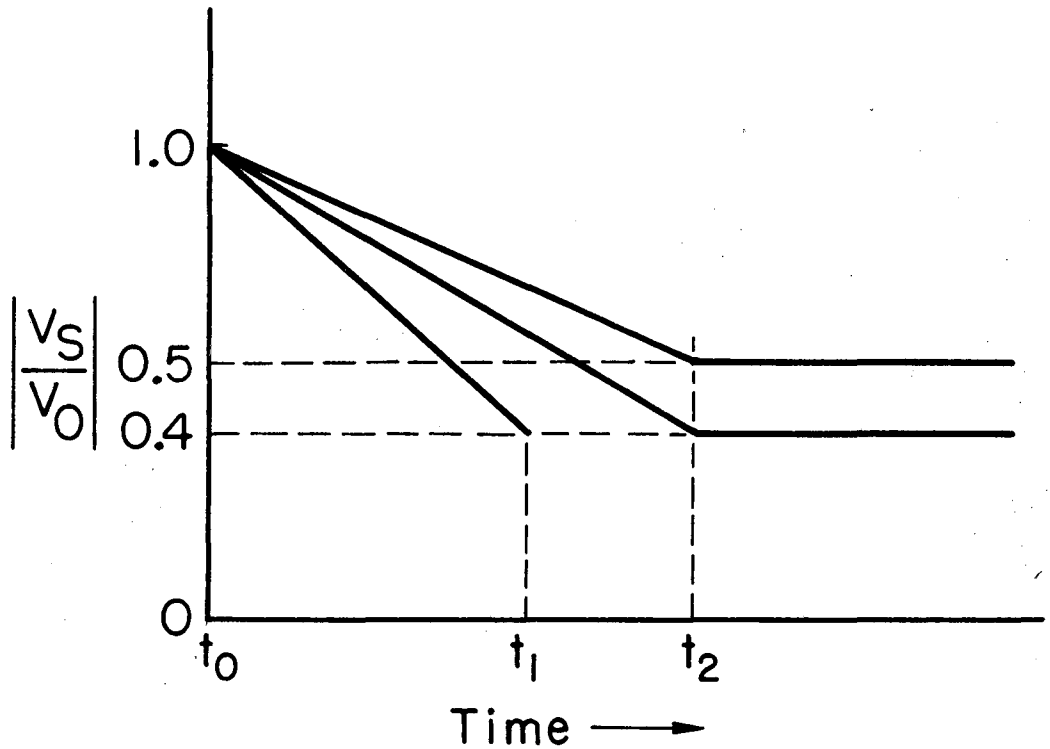

MUB-7123

Fig. 2

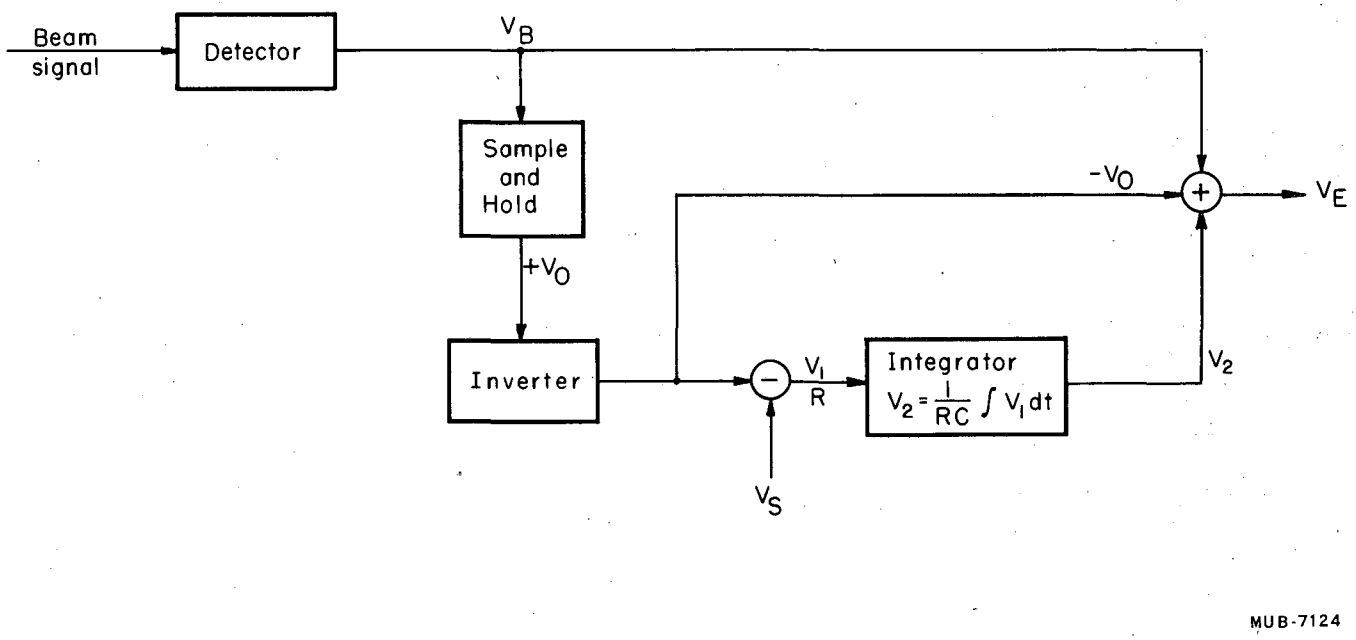
Beam signal
Detector
V_B
Sample and Hold
$+V_O$
Inverter
$-V_O$
V_E
V_1
R
Integrator
$V_2 = \frac{1}{RC} \int V_1 dt$
V_2
V_S
MUB-7124

Fig. 3

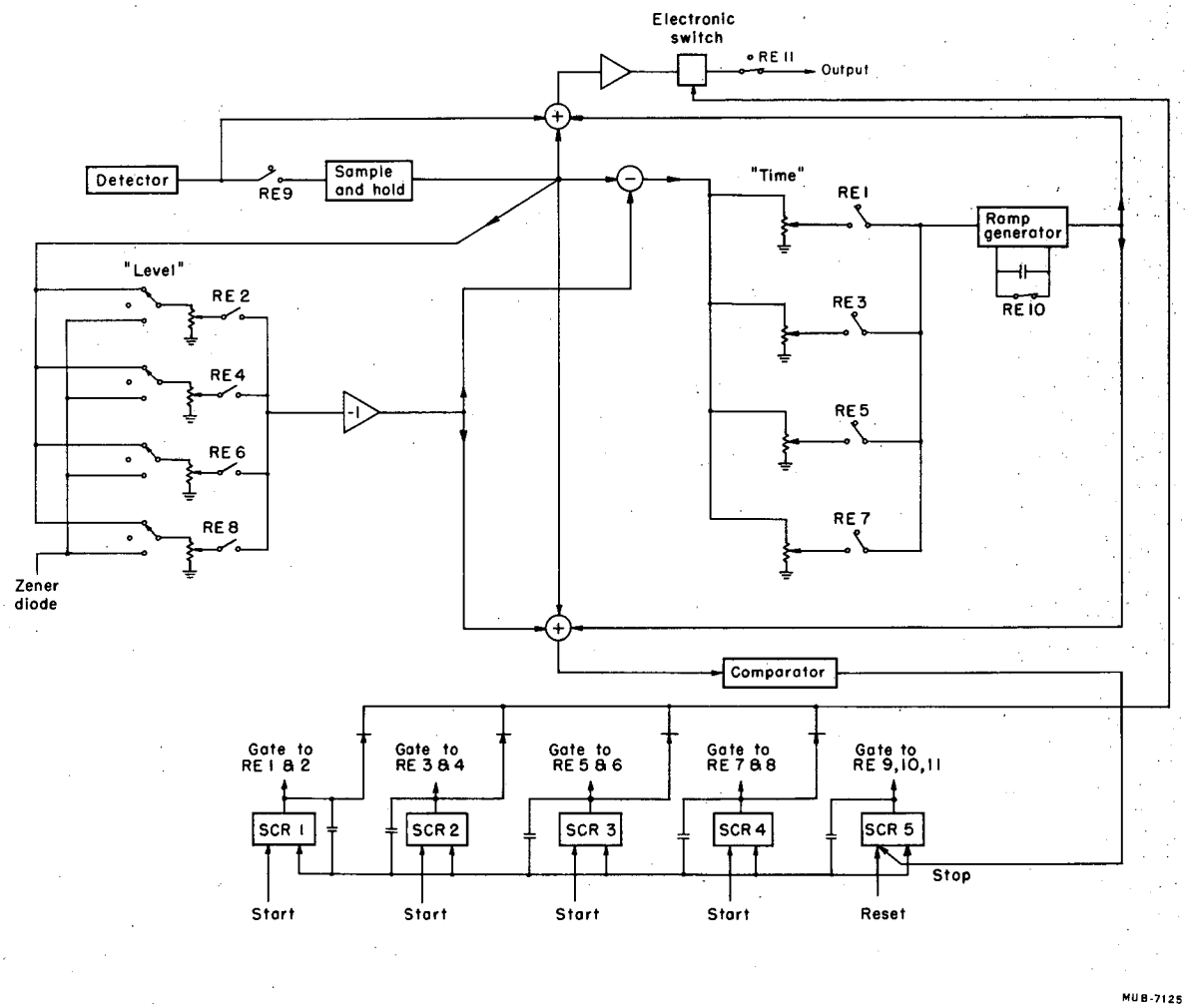
Electronic switch
RE 11
Output
Detector
RE9
Sample and hold
"Time"
RE1
Ramp generator
RE10
"Level"
RE 2
RE3
RE4
-1
RE5
RE 6
RE7
RE 8
Zener diode
Comparator
Gate to RE 1 & 2
Gate to RE 3 & 4
Gate to RE 5 & 6
Gate to RE 7 & 8
Gate to RE 9,10,11
SCR 1
SCR 2
SCR 3
SCR 4
SCR 5
Stop
Start
Start
Start
Start
Reset
MUB-7125

Fig. 4

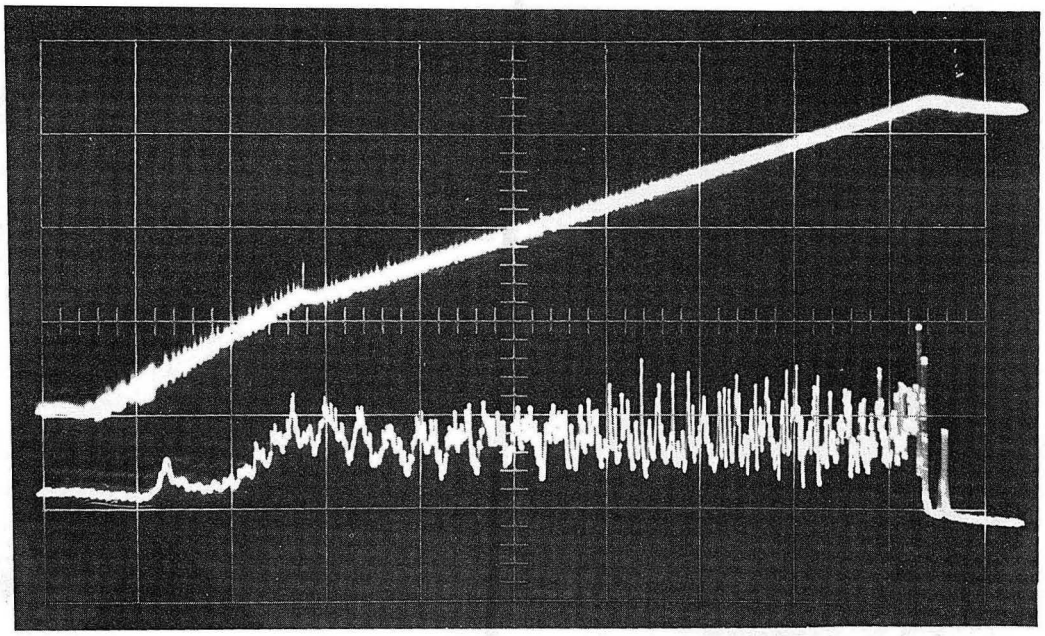

ZN-5113

Fig. 5

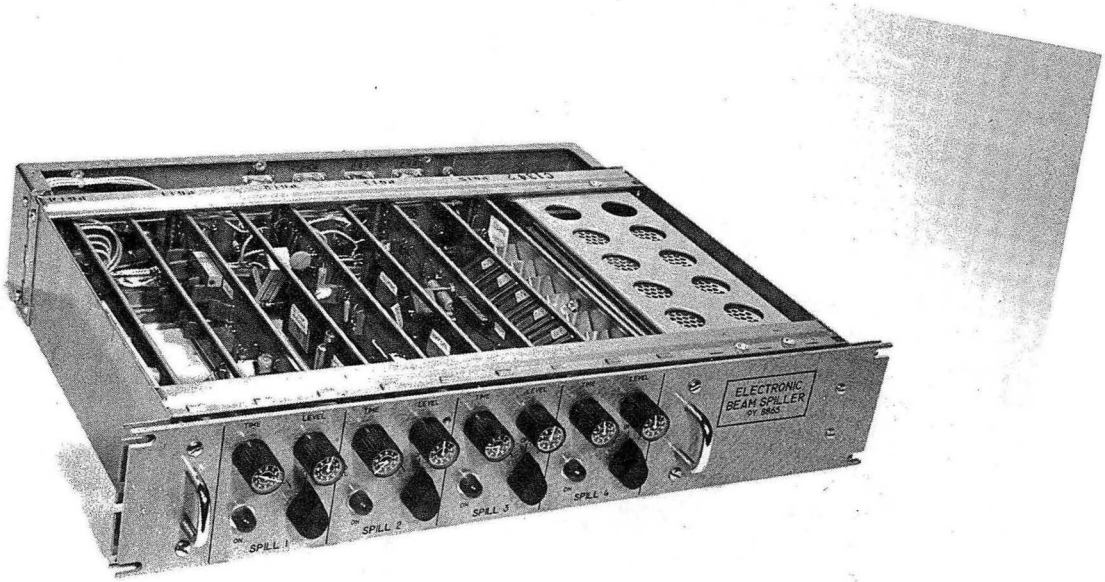
ELECTRONIC
BEAM SPILLER
LEVEL
ON
SPILL 1
SPILL 2
SPILL 3
SPILL 4

ZN-5103

Fig. 6

This report was prepared as an account of Government sponsored work. Neither the United States, nor the Commission, nor any person acting on behalf of the Commission:

A. Makes any warranty or representation, expressed or implied, with respect to the accuracy, completeness, or usefulness of the information contained in this report, or that the use of any information, apparatus, method, or process disclosed in this report may not infringe privately owned rights; or

B. Assumes any liabilities with respect to the use of, or for damages resulting from the use of any information, apparatus, method, or process disclosed in this report.

As used in the above, "person acting on behalf of the Commission" includes any employee or contractor of the Commission, or employee of such contractor, to the extent that such employee or contractor of the Commission, or employee of such contractor prepares, disseminates, or provides access to, any information pursuant to his employment or contract with the Commission, or his employment with such contractor.

LRL