UCRL-16236

University of California

Ernest O. Lawrence Radiation Laboratory

TWO-WEEK LOAN COPY

This is a Library Circulating Copy which may be borrowed for two weeks. For a personal retention copy, call Tech. Info. Division, Ext. 5545

200 BeV ACCELERATOR HANDLING SYSTEMS
IN REGIONS OF HIGH RESIDUAL RADIOACTIVITY

Berkeley, California

DISCLAIMER

This document was prepared as an account of work sponsored by the United States Government. While this document is believed to contain correct information, neither the United States Government nor any agency thereof, nor the Regents of the University of California, nor any of their employees, makes any warranty, express or implied, or assumes any legal responsibility for the accuracy, completeness, or usefulness of any information, apparatus, product, or process disclosed, or represents that its use would not infringe privately owned rights. Reference herein to any specific commercial product, process, or service by its trade name, trademark, manufacturer, or otherwise, does not necessarily constitute or imply its endorsement, recommendation, or favoring by the United States Government or any agency thereof, or the Regents of the University of California. The views and opinions of authors expressed herein do not necessarily state or reflect those of the United States Government or any agency thereof or the Regents of the University of California.

V International Conference on
High Energy Accelerators,
Frascati, Italy. Sept. 9-16,
1965 - Proceedings

UCRL-16236

UNIVERSITY OF CALIFORNIA

Lawrence Radiation Laboratory
Berkeley, California

AEC Contract No. W-7405-eng-48

200 BeV ACCELERATOR HANDLING SYSTEMS IN REGIONS OF HIGH RESIDUAL RADIOACTIVITY

William W. Salsig

September 1965

Over the past several years, a revolution has occurred regarding beam intensities in high energy accelerators. When the present generation of machines was designed, beam intensities in the 10^{11} ppp range appeared thoroughly adequate. Since then, improvements have been made or proposed on many of these machines to increase beam intensities by a factor of 50 or more. Machines of the next generation are being designed for intensities of the order of 10^{13} particles per second, at 200 BeV by LRL and at 300 BeV by CERN. Increased intensity, coupled with much higher energy, generates significant radiation problems with respect to close-in experimental setups, machine maintenance and servicing, and general access for monitoring and diagnostics.

The residual radiation problem has received considerable attention in the LRL 200 BeV Study. Measurements of radiation on the Brookhaven AGS, the PS at CERN, and the Bevatron at LRL have provided useful guidelines for predicting radiation fluxes. Innovations are proposed, such as the addition of boron to the walls of the enclosure to lower radiation levels, and the installation of shielding plugs in the open sides of the most radioactive C-magnets. Operational procedures which allow early detection and correction of unusual beam spill should also reduce residual radiation significantly. It should be possible to service more than 90% of the circumference of the 200 BeV accelerator by unshielded personnel, who would receive radiation dosages of half the weekly tolerance (50 mrem) per 8-hour day. The remaining portion of the machine, occurring downstream of target and beam extraction stations, must be serviced from behind several inches

of dense shielding, if more than a few minutes of work is required.

Personnel shielding may be provided in many ways. A reduction in radiation exposure of almost an order of magnitude may be obtained by the simple precaution of locating water services and interlocks, alignment adjustments, and power connections away from the magnet ends and behind the magnet yokes. Temporary shielding placed around a specific source, either by crane or by hand, will lower the radiation flux locally, perhaps even allowing unshielded personnel to execute various operations. Portable shields with arm holes through which technician may use his hands, can increase the permissible working time by a large factor, since the extremities can safely receive more exposure than that allowable for the whole body. In hotter environments, personnel must be totally enclosed by several inches of dense material. Solutions for this particular problem are the subject of the ensuing discussion.

One naturally associates the use of remote manipulators with the concept of total enclosure for the operator. This prospect is dismaying, for it is well known that even the most simple examples of such tools require times an order of magnitude longer to execute a given operation than when the same operation is done directly by hands. Significant savings in servicing time would result if "feel" and the execution of familiar motions could remain with the operator.

Can a system be envisioned which is intermediate between direct use of the hands and exclusive use of remote manipulators? Certainly,

compromise intermediate solutions can be conceived for operations which may be foreseen and implemented at the design stage, or perhaps even improvised during a particular incident. Intermediate solutions would probably not be adequate for totally unexpected situations, for which only a universal capability would suffice. Hopefully, these situations will arise only a few times during the life of the accelerator. Although unshielded personnel can work for a few minutes even on the most radioactive components, it is expected that a pair of manually-operated master-slave manipulators can do much useful work. Fortunately, practically all of the shielded servicing work can be expected to fall in the "foreseen" category, where the intermediate solutions will be adequate and will yield significant time savings.

An "intermediate" servicing solution is obtained by the use of extension tools passing through universal motion fittings in the radiation shielding of the service vehicle. These tools remain directly in the technician's hands, allow manual engagement of the tool with the work, and retain "feel" for the operator throughout the work cycle. Such a system is feasible provided that the accelerator component is designed for the servicing operation as well as for its accelerator function. This requirement usually reduces simply to orienting the fasteners in a connection such that they can be easily reached and manipulated by an extension tool.

To minimize radiation leakage, extension tools must be relatively close fitting where they pass through the vehicle's shielding wall. It is usually not possible to pass the wrench end through the hole.

This problem has several solutions. If the shielded house be made like a turret, revolving around a vertical axis, tools may be pre-installed on several faces, and the proper face brought to the work as required. Since the regions of high radiation should be very local, the tools in the various faces may be changed by a man outside the vehicle some 200 feet upstream. This feature, coupled with the "turret lathe" tool concept, offers ample flexibility to meet requirements for a wide variety of situations.

Magnet enclosure width is determined by the clearance necessary for operation of the shielded vehicles, and must be kept to a minimum. This makes it awkward to approach the accelerator radially, for distances are quite small and the tool position in the vehicle wall would have to be unduly precise. The use of extension tools at approximately 45° to the accelerator axis allows greater freedom in engaging the tool with the work. Overall vision is also better with this arrangement.

In Fig. 1, an operator in such a shielded vehicle is shown at work on a magnet power connection. In Fig.2, an operator is shown adjusting the position of one of the gradient magnets. The master-slave manipulators are used to aid and supplement the extended tool operation; in the first case they are used to position or separate the bus bars after the fasteners are released, and in the second case they remove and hold the shim stack to be exchanged for the preset replacement. Alternatively, the vehicle could be moved upstream to a region where an unshielded technician outside the vehicle could make the

proper shim thickness adjustment.

A more troublesome problem arises in the necessary joinery for the vacuum chamber and water connections, where conventional bolted flanges would pose complex manipulation problems. Instead, it is proposed to use conical spring flanges which are retained by a split keeper ring. For the vacuum tube connections, a force of some 15 tons is required to close the metal-gasketed flanges before the retainers are installed, which requires the use of an hydraulically-operated clamp such as shown in Fig. 3. This clamp will be heavy and must be carried by the overhead crane. Final positioning is achieved by guide rods extending into the shielded vehicle, with the operator retaining "feel" over the final guidance. Hand-operated hydraulic pumps for actuating the clamping tools will also be within the shielded vehicle, again leaving "feel" for the operation in the technician's hands. Figure 4 shows an arrangement for working on a vacuum connection or a water manifold connection, using the system just described.

In some instances it may be necessary for the operator to use his hands directly on the piece of work. In order to accomplish this in regions of high residual radiation, a specific section of the shielded vehicle turret can be exchanged for a man-body shield which will allow the operator to extend his arms through holes in the shield and beyond the walls of the vehicle. It is not possible to supply the same degree of radiation protection with the body shield as the fully-shielded vehicle supplies, so the exposure time must necessarily be shorter.

The body shield would, however, allow a much longer time for completion of a task than the minutes permitted unshielded personnel in the regions of highest residual radiation. Equipment arrangement for this scheme is shown in Fig. 5.

In the 200 BeV Design study it is proposed that these shielded manipulator vehicles operate on both sides of the synchrotron magnet ring. They will thus be able to aid and supplement each other in case of unforeseen emergencies. Even though less than 10% of the accelerator is expected to become sufficiently radioactive to require the use of these vehicles, they can reach and service practically all of the accelerator components. Although servicing these new machines will not be comparable to working inside an atomic reactor, techniques much more sophisticated than those utilized today will be required, and these techniques must be developed in close conjunction with the design of the accelerator and its enclosure.

Figure Captions

Figure 1 - Magnet Power Disconnection from Shielded Manipulator Vehicle

Figure 2 - Magnet Adjustment from Shielded Manipulator Vehicle

Figure 3 - Quick Disconnect Flange Assembly Tool

Figure 4 - Operation of Vacuum and Water Quick Disconnections from Shielded Manipulator Vehicle

Figure 5 - Manual Manipulation Attachment for Shielded Manipulator Vehicle

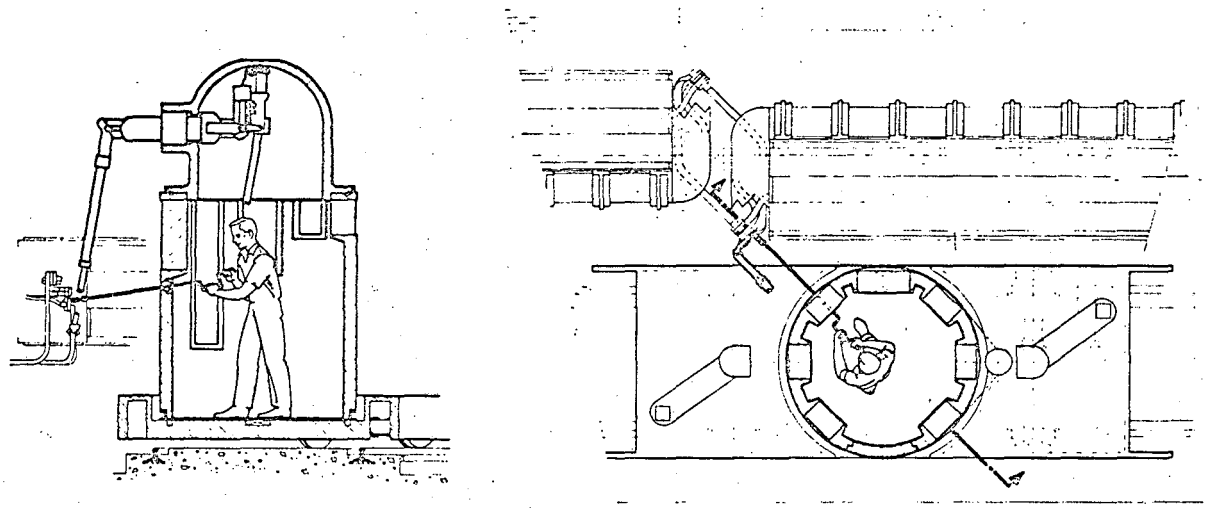

Magnet Power Disconnection
from Shielded Manipulator Vehicle

Figure 1

MUB-7729

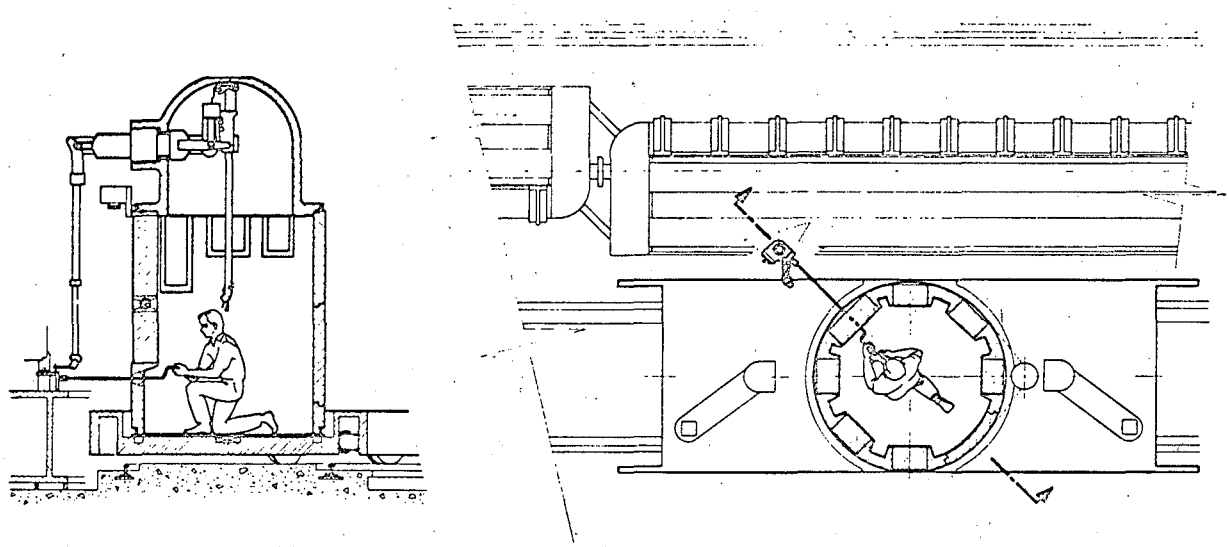

Magnet Adjustment
from Shielded Manipulator Vehicle

Figure 2

MUB-7730

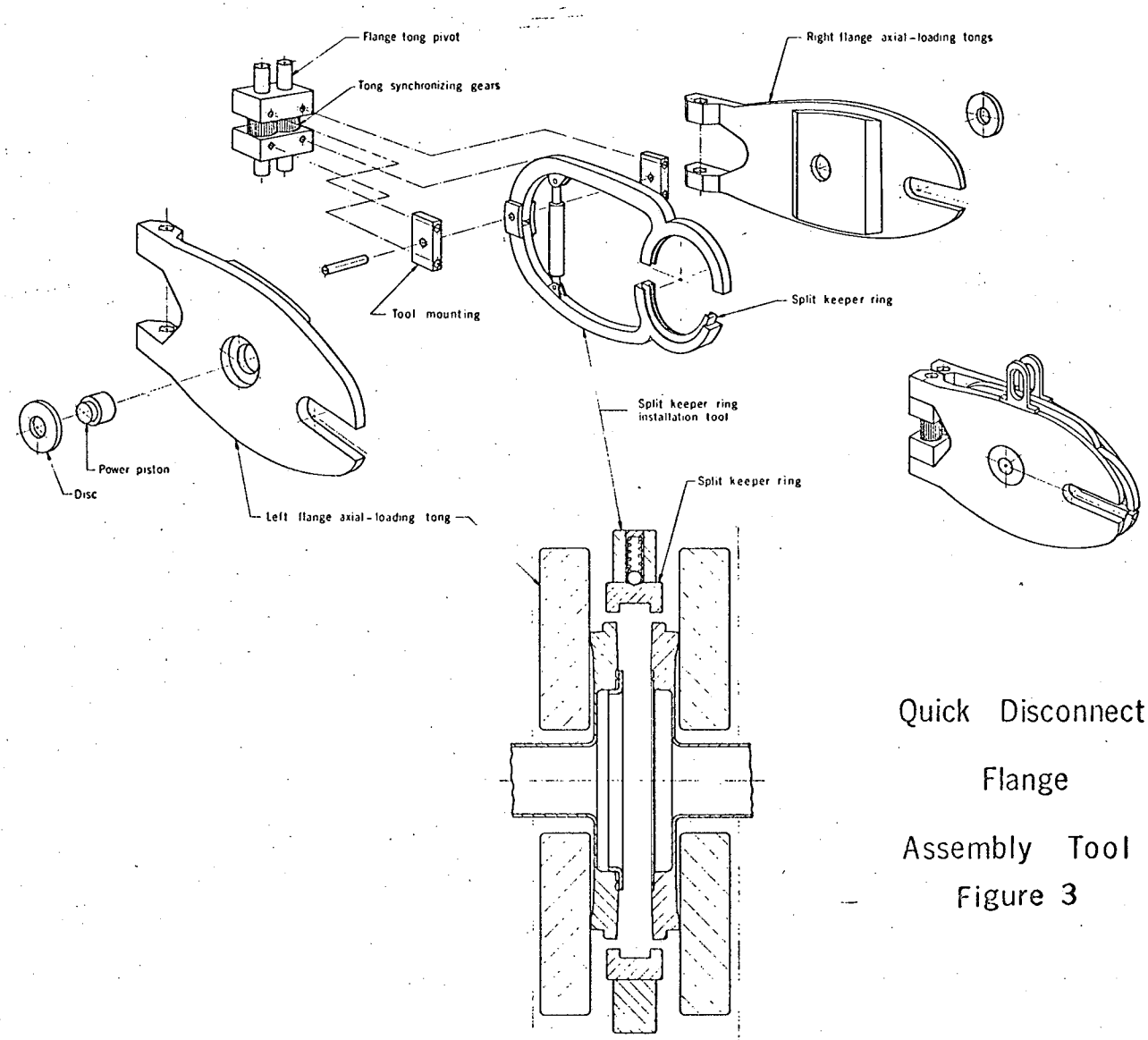

Quick Disconnect

Flange

Assembly Tool

Figure 3

MUB-7731

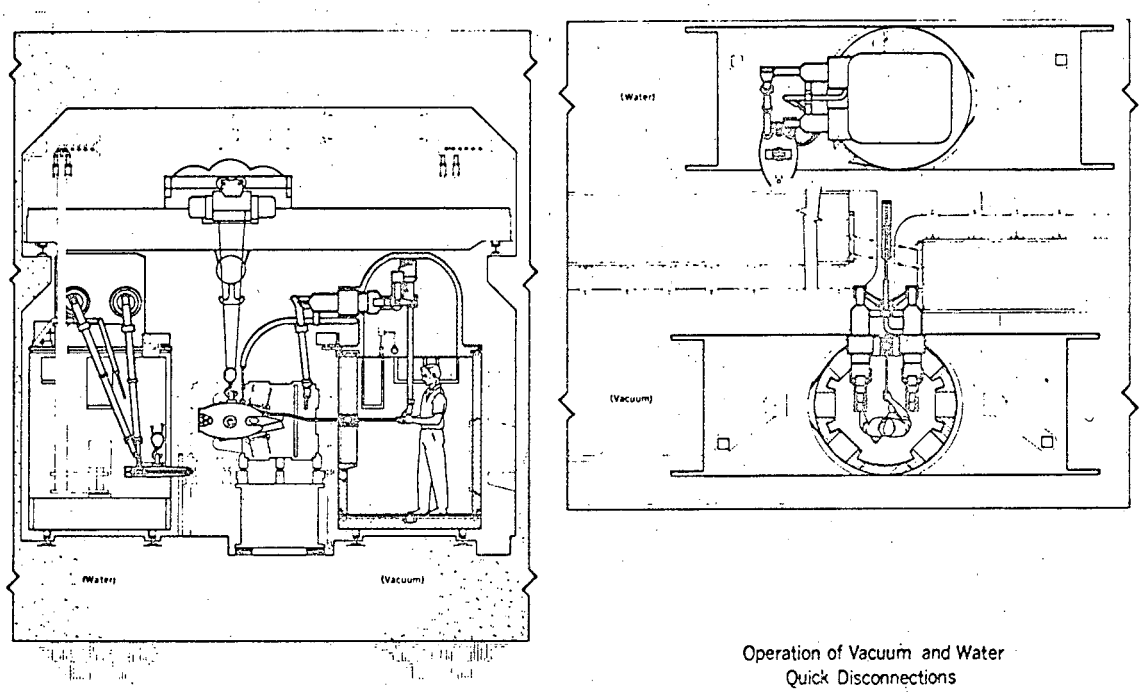

Operation of Vacuum and Water
Quick Disconnections
from Shielded Manipulator Vehicle

Figure 4

MUB-7732

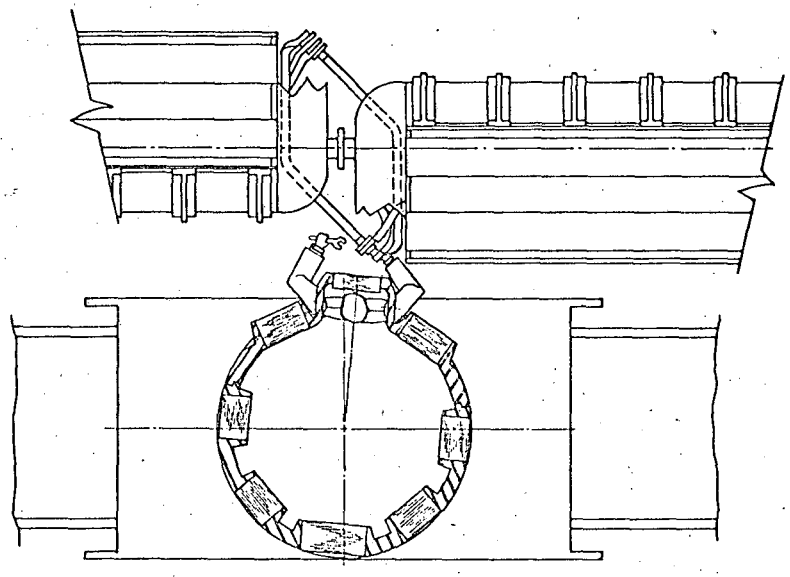

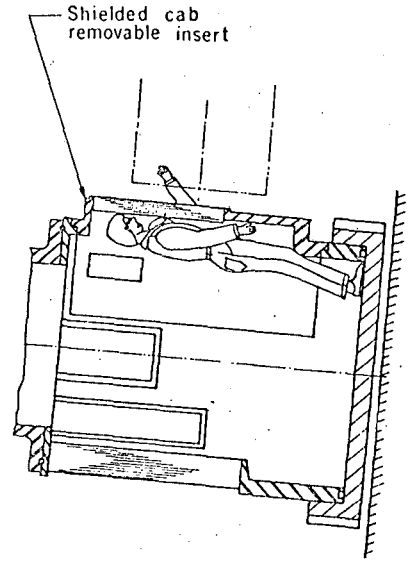

Manual Manipulation Attachment
For Shielded Manipulator Vehicle

Figure 5

MUB-7733

This report was prepared as an account of Government sponsored work. Neither the United States, nor the Commission, nor any person acting on behalf of the Commission:

A. Makes any warranty or representation, expressed or implied, with respect to the accuracy, completeness, or usefulness of the information contained in this report, or that the use of any information, apparatus, method, or process disclosed in this report may not infringe privately owned rights; or

B. Assumes any liabilities with respect to the use of, or for damages resulting from the use of any information, apparatus, method, or process disclosed in this report.

As used in the above, "person acting on behalf of the Commission" includes any employee or contractor of the Commission, or employee of such contractor, to the extent that such employee or contractor of the Commission, or employee of such contractor prepares, disseminates, or provides access to, any information pursuant to his employment or contract with the Commission, or his employment with such contractor.