UCRL-16238

University of California

Ernest O. Lawrence Radiation Laboratory

DESIGN STUDY FOR A 200 BeV ACCELERATOR FACILITY

TWO-WEEK LOAN COPY

This is a Library Circulating Copy which may be borrowed for two weeks. For a personal retention copy, call Tech. Info. Division, Ext. 5545

Berkeley, California

DISCLAIMER

This document was prepared as an account of work sponsored by the United States Government. While this document is believed to contain correct information, neither the United States Government nor any agency thereof, nor the Regents of the University of California, nor any of their employees, makes any warranty, express or implied, or assumes any legal responsibility for the accuracy, completeness, or usefulness of any information, apparatus, product, or process disclosed, or represents that its use would not infringe privately owned rights. Reference herein to any specific commercial product, process, or service by its trade name, trademark, manufacturer, or otherwise, does not necessarily constitute or imply its endorsement, recommendation, or favoring by the United States Government or any agency thereof, or the Regents of the University of California. The views and opinions of authors expressed herein do not necessarily state or reflect those of the United States Government or any agency thereof or the Regents of the University of California.

UCRL-16238

V. International Conference on High Energy Physics - Frascati, Italy

University of California
Lawrence Radiation Laboratory
Berkeley, California
AEC Contract No. W-7405-eng-48

DESIGN STUDY FOR A 200 GEV ACCELERATOR FACILITY

by
Lloyd Smith

September 1965

Design Study for a 200 GeV Accelerator Facility

I. Introduction

At the previous accelerator conference in Dubna, a preliminary report[1] was presented on the status of design work being carried on at the Lawrence Radiation Laboratory for a proton accelerator in the multi-hundred-GeV range. This Design Study is now complete and has been transmitted to the Atomic Energy Commission. No organization has as yet submitted a formal proposal to construct such a facility; however, a number of related activities are being pursued. For one thing, the Commission has hired a combination of architectural and engineering firms to examine the cost and scheduling estimates and to assist the Radiation Laboratory in further optimization of parameters. This work is now in progress. At the same time, the Commission has arranged with the National Academy of Sciences to set up a committee to evaluate the numerous sites which have been proposed, with the Commission retaining the responsibility for a final choice. Lastly, several dozen universities across the nation have established a joint corporation which will presumably be responsible for the management of the new laboratory, although there has as yet been no formal contract between the corporation and the Commission. It is hoped that the questions of costs, schedules, and sites will be sufficiently settled by the end of the year to permit authorization of detailed design or possibly of the complete project.

An energy of 200 GeV was selected some time ago for the Design Study. In the continuing absence of any indication from theory or experiment of a necessary or best energy, we believe that 200 GeV is properly consistent with the two-step policy adopted by the government; i.e., to construct this facility in the 600-1000 GeV range. At 200 GeV, it is still possible to visualize operation and lay out experimental areas on the basis of known techniques, so that the facility should be effectively productive as soon as the accelerator can function. If our policy had been to take only one more step, we would almost certainly have assumed the risks associated with a higher-energy facility--perhaps in the 300 to 400 GeV range.

In the Design Study, we were faced with the problem of producing meaningful estimates without being too deeply committed to any particular site. We chose to handle this point by studying two specific sites: the

first, referred to as Site Example A, is a surplus military base about 35 miles from Berkeley, characterized geologically as a compressible-soils site, while the second, called Site Example B, is a tract of privately owned land near Sacramento underlain by solid metamorphic rock close to the surface. Although site-dependent features of design are too complicated and interdependent to permit a simple interpolation for a third site, the differences are nevertheless informative.

II. Description of the Accelerator

Schematic layouts of the accelerator at the two sites are shown in Fig. 1, and a detailed plan for Site A is shown in Fig. 2. Some of the more basic parameters of the accelerator are given in Table I. Major emphasis is put on external proton beams for experimental use; initial construction should include two such areas and one internal target area, leaving five long straight sections available for future developments. In addition, the 8 GeV Injector Synchrotron would have an experimental area of its own, to be used primarily for developing and testing equipment for use in the 200 GeV experimental areas. No major experimental program at 8 GeV is contemplated now, although the injector is designed for an intensity of about 10^{14} protons per second and could be put to direct use if a sufficiently important set of experiments presented itself.

A. Main Ring Magnets

The main ring consists of 480 identical (except for a possible sextupole correction) magnets 6 inches long, 24 Collins quadrupoles, and 24 short gradient magnets adjacent to the 12 Collins straight sections. These short magnets have the effect of permitting somewhat longer straight sections and reducing the amplitude of the betatron functions. The gradient magnets, shown in cross section in Fig. 3, were designed entirely by use of computer codes which calculate magnetic fields for given steel and copper configurations to high accuracy, including the effect of finite permeability. Models of these magnets will be ordered soon, primarily for the purpose of investigating problems of fabrication and mechanical rigidity; it is expected that the profile will be very close to the desired shape.

The aperture of 5×12 cm^2 was adopted on the basis of the usual considerations of closed-orbit errors, betatron amplitudes, and so on. We arrived at a wider and shallower aperture than specified for the CERN

300 GeV design because we plan on multiturn injection in the horizontal plane to reach the design intensity of 3×10^{13} protons/pulse.

The magnet will operate at a maximum rate of 30 pulses per minute at 200 GeV, or 23 pulses per minute with a 600-msec flat top. Mercury-arc rectifiers have almost disappeared from the market in the United States, while silicon-controlled rectifiers of the size needed here do not yet exist. However, the new technology is developing sufficiently rapidly that we feel safe in designing the power supply around SCR's.

B. Acceleration System

The required amplitude of 7 MV per turn is provided by 42 ferrite-tuned 50-Mc/sec cavities distributed among three of the long straight sections (see Fig. 4). Because of the small tuning range ($\approx 0.5\%$) it's possible to locate the amplifiers and even the ferrite in houses on top of the shielding cover, leaving nothing in the main ring enclosure but the cavity itself, (see Fig. 3). This arrangement is one instance of the general approach of keeping equipment out of the tunnel whenever possible, in order to facilitate maintenance and repair.

C. Injection

In agreement with the CERN study group, we have selected a rapid-cycling synchrotron as the means of injection (see Fig. 4). This synchrotron is exactly one-seventh the size of the main ring, which leads to a filling time of 0.33 sec at 18 cps. The rf systems of the two accelerators are synchronized at the moment of extraction from the injector in order to fill successive azimuthal segments of the main ring without appreciable loss of beam. The injector synchrotron magnet is excited by a biased resonant system in the usual ways except that the injector is of such a size that the choke will be distributed rather than lumped at a central location.

A 200-Mc 200-MeV Alvarez-type linear accelerator will be used as the pre-injector. This piece of apparatus will be of quite standard design, except that we are developing a manifold system for powering the linac tanks reminiscent of that used on DESY. Such a system offers substantial economies in rf equipment and at the same time serve the purpose of holding the tanks accurately in phase.

D. Costs and Schedules

As mentioned in the introduction, these items are currently under review by an independent organization. However, it may be of interest here to quote some of the figures given in the Design Study report. The total construction cost for the accelerator facility is $288 M, made up of $193 M for the accelerator itself, $59 M for the experimental areas, and $36 M for support buildings and general utilities. In addition, an initial complement of research equipment amounting to some $40 M is recommended. As for schedule, it is predicted that the facility can be completed in 6.5 years after authorization, provided that design and development work continue at the present rate until authorization.

Table I: List of Parameters

	Units	Quantity
Energy	GeV	200
Intensity	protons/pulse	3×10^{13}
Peak field	kG	15
Average radius	meters	690.3
Injection energy	GeV	8
Injection field	kG	0.667
Aperture	$(cm)^2$	5 x 12
$k = \frac{1}{B}\frac{dB}{dx}$	$(meter)^{-1}$	3.26
Q		16.75
Number of superperiods		12
Free length of Collins straight sections	meters	34.2
Weight of gradient magnets	tons	17 400
Magnet rise time	sec	0.8
Energy gain per turn	MeV	3.5

REFERENCES

[1] Lloyd Smith, Berkeley Study for a Proton Synchrotron in the 150-300 GeV Range, in Proceedings of the International Conference on High Energy Accelerators, Dubna, August 21-27, 1963, p. 80.

FIGURE CAPTIONS

Fig. 1 Schematic layout of accelerator facility.

Fig. 2 Plant of Laboratory at Site A.

Fig. 3 Cross section of main ring magnet.

Fig. 4 Main ring accelerating cavity.

Fig. 5 Layout of injector synchrotron.

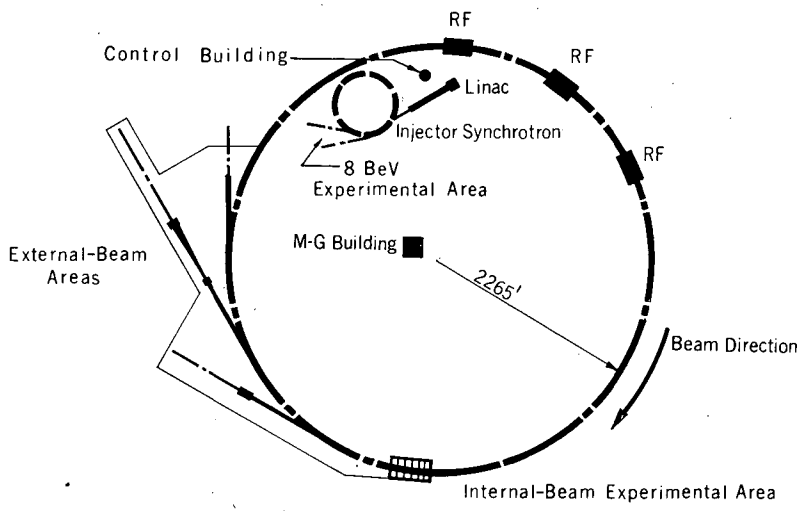

Site Example A

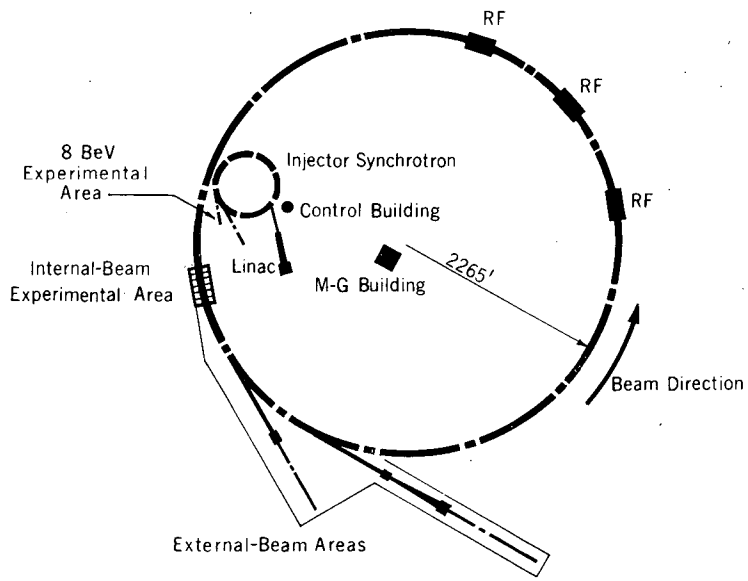

Site Example B

Schematic Layout of Accelerator Facility

MUB-6348

Fig. 1

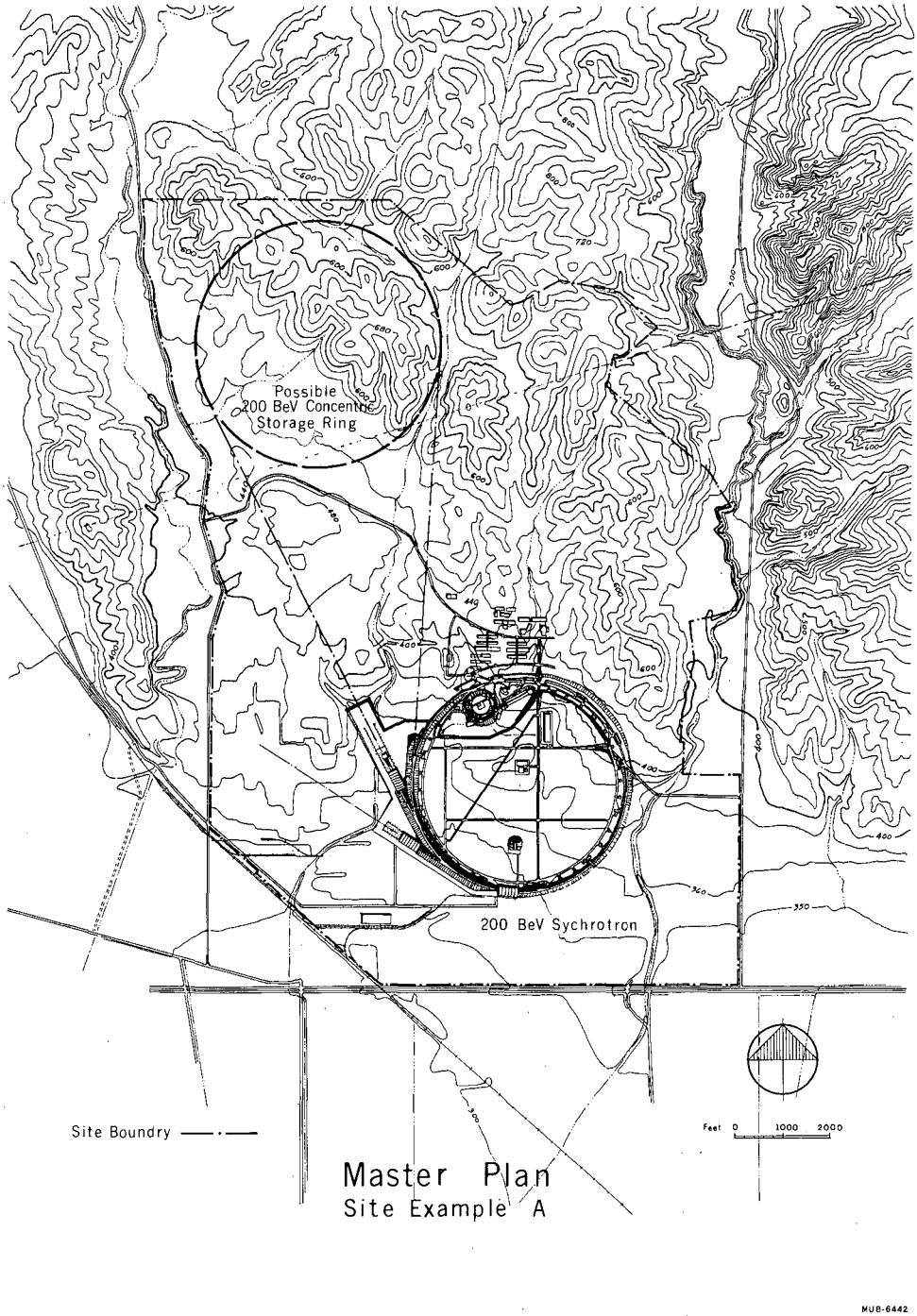
Possible
200 BeV Concentric
Storage Ring
200 BeV Sychrotron
Site Boundry
Feet 0 1000 2000
Master Plan
Site Example A
MUB-6442

Fig. 2

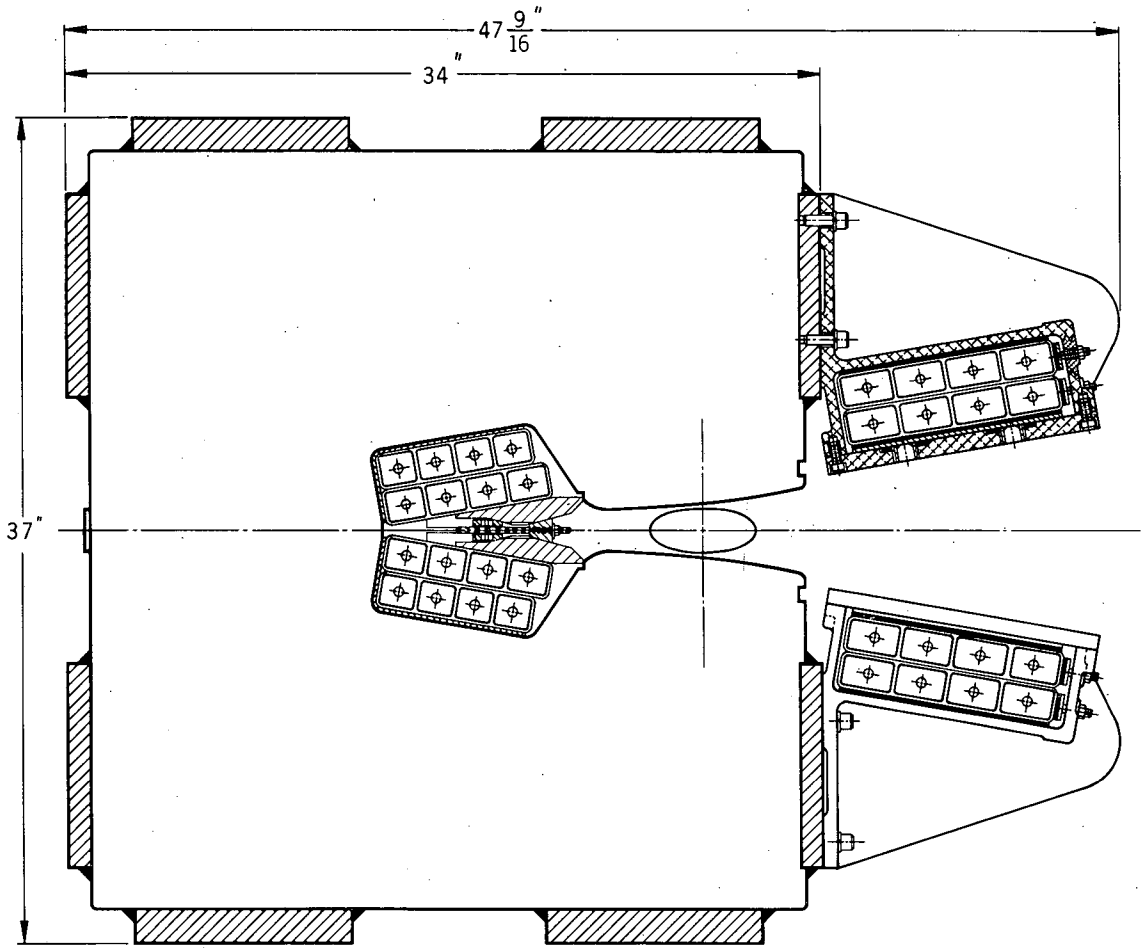

Primary Ring Magnet Elements
Gradient Magnet Cross Section

MUB-5726

Fig. 3

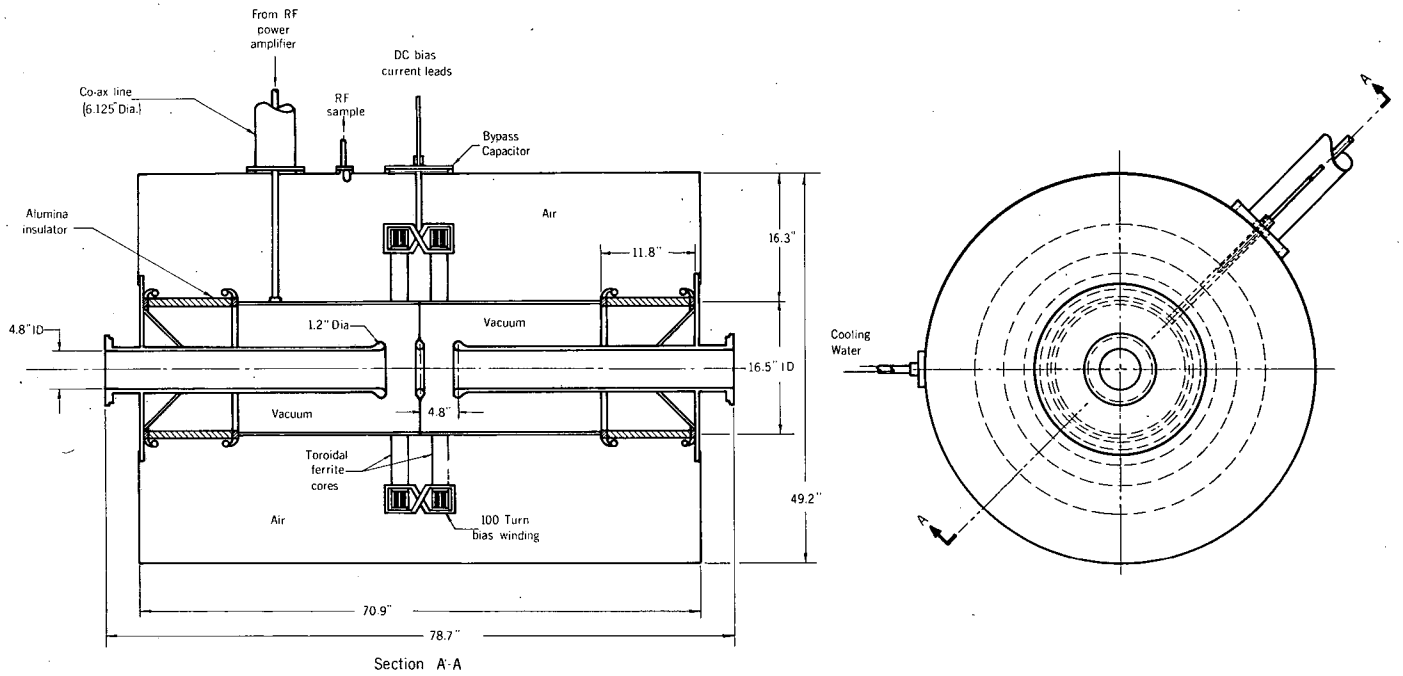

Main Ring RF Cavity (52 Mc/sec)

MUB-6236

Fig. 4

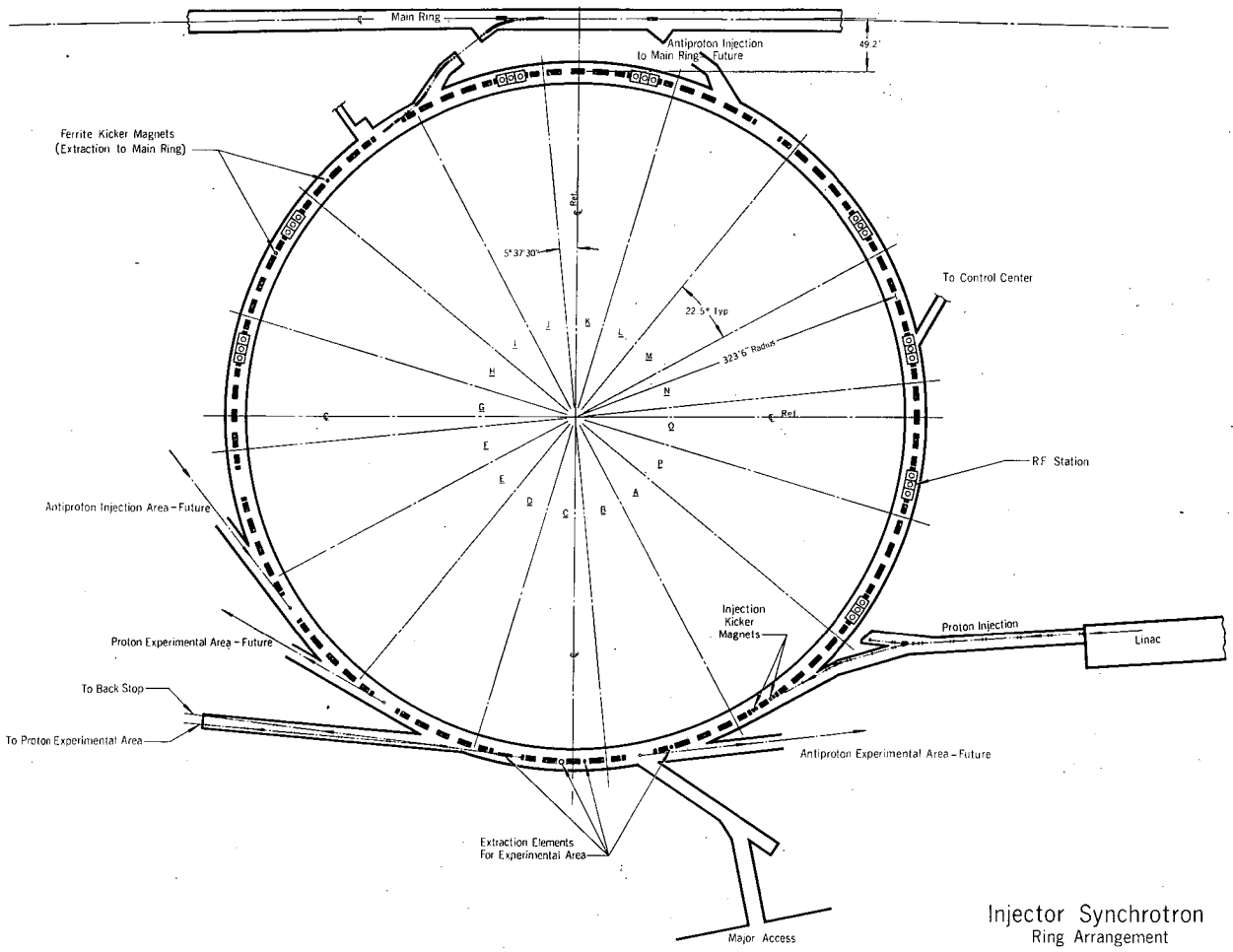

Injector Synchrotron
Ring Arrangement

MUB-6008

Fig. 5

This report was prepared as an account of Government sponsored work. Neither the United States, nor the Commission, nor any person acting on behalf of the Commission:

A. Makes any warranty or representation, expressed or implied, with respect to the accuracy, completeness, or usefulness of the information contained in this report, or that the use of any information, apparatus, method, or process disclosed in this report may not infringe privately owned rights; or

B. Assumes any liabilities with respect to the use of, or for damages resulting from the use of any information, apparatus, method, or process disclosed in this report.

As used in the above, "person acting on behalf of the Commission" includes any employee or contractor of the Commission, or employee of such contractor, to the extent that such employee or contractor of the Commission, or employee of such contractor prepares, disseminates, or provides access to, any information pursuant to his employment or contract with the Commission, or his employment with such contractor.