CONFIDENTIAL
SECURITY INFORMATION

UCRL-1633

DECLASSIFIED

UNIVERSITY OF CALIFORNIA — BERKELEY

TWO-WEEK LOAN COPY

This is a Library Circulating Copy which may be borrowed for two weeks. For a personal retention copy, call Tech. Info. Division, Ext. 5545

RADIATION LABORATORY

CONFIDENTIAL
SECURITY INFORMATION

DISCLAIMER

This document was prepared as an account of work sponsored by the United States Government. While this document is believed to contain correct information, neither the United States Government nor any agency thereof, nor the Regents of the University of California, nor any of their employees, makes any warranty, express or implied, or assumes any legal responsibility for the accuracy, completeness, or usefulness of any information, apparatus, product, or process disclosed, or represents that its use would not infringe privately owned rights. Reference herein to any specific commercial product, process, or service by its trade name, trademark, manufacturer, or otherwise, does not necessarily constitute or imply its endorsement, recommendation, or favoring by the United States Government or any agency thereof, or the Regents of the University of California. The views and opinions of authors expressed herein do not necessarily state or reflect those of the United States Government or any agency thereof or the Regents of the University of California.

UNIVERSITY OF CALIFORNIA
Radiation Laboratory

Cover Sheet
Do not remove

INDEX NO. UCRL-1633
This document contains 38 pages
This is copy 2 of 5 series B

DECLASSIFIED

Issued to Information Division

CONFIDENTIAL
Classification

Each person who receives this document must sign the cover sheet in the space below.

Route to	Noted by	Date	Route to	Noted by	Date

I-5(M)

DECLASSIFIED

UCRL-1633
Technology-Materials Testing Accelerator

CONFIDENTIAL
SECURITY INFORMATION

UNIVERSITY OF CALIFORNIA

Radiation Laboratory

Contract No. W-7405-eng-48

CLASSIFICATION CANCELLED
BY AUTHORITY OF THE DECLASSIFICATION BRANCH USAEC per Crash List #7
BY B Froskett 3-30-56
SIGNATURE OF THE PERSON MAKING THE CHANGE DATE

DECLASSIFIED

DRIFT TUBE MODEL MAGNET REPORT

D. Sewell and H. Parmentier

June 27, 1952

CONFIDENTIAL
SECURITY INFORMATION

RESTRICTED DATA

This document contains restricted data as defined in the Atomic Energy Act of 1946. Its transmittal or disclosure of its contents in any manner to an unauthorized person is prohibited.

Berkeley, California

Distribution: Series A	Copy No.
Atomic Energy Commission, Washington	1-4
Chicago Operations Office	5
Patent Branch, Washington	6
San Francisco Area Office	7-8
University of California Radiation Laboratory	9-13
Technical Information Service, Oak Ridge	14-19
California Research and Development Company	20-24

DECLASSIFIED

TABLE OF CONTENTS

	Page No.
INTRODUCTION	4
Type of Measurements	4
Personnel	4
Nomenclature	5
THEORETICAL DISCUSSION	5
Focussing Equation and References	5
Scaling Factors	6
Permeability	6
Dimensional Scaling Factors	7
Ampere Turns	7
Forces	7
MECHANICAL DESIGN	8
MEASURING EQUIPMENT	9
Field Measurements	9
Forces	9
MEASUREMENTS	10
Magnetization	10
Uniformity	10
Forces Between Magnets	11
RESULTS	12
Magnetization	12
Uniformity	12
Ampere Turns	12
Forces	13

DECLASSIFIED

CONFIDENTIAL

DRIFT TUBE MODEL MAGNET REPORT

D. Sewell and H. Parmentier

Radiation Laboratory, Department of Physics
University of California, Berkeley, California

June 27, 1952

INTRODUCTION

Type of Measurements.

Early in the design of the Mark I accelerator it was decided to install magnetic lenses in the drift tubes. A number of model magnets were constructed and tested to determine the best design for these lenses. This report includes only the results of the tests on the final models of the magnets that are designed for Mark I.

The following investigations were carried out on the model magnets.

1. Magnetic Field
   a. Magnetization--current vs. magnetic field
   b. Uniformity--field vs. position on the axis.
2. Forces between magnets
   a. Parallel to the axis of the accelerator.
   b. Perpendicular to the axis of the accelerator.

Personnel

These investigations were carried out by the magnetic measurements group which included, in addition to the authors, the following personnel:

Lee Andelin	Lorenzo Eggertz	George Plummer
Eugene Cox	Frank Grobelch	
Alice Dodson	James Hulse	

CONFIDENTIAL

DECLASSIFIED

Nomenclature

All of the results that are given in this report are in terms of the full scale machine unless otherwise indicated.

The following nomenclature will be employed throughout the report.

1. The drift tube magnets are abbreviated DTM.
2. The drift tubes are numbered from the entrance end of the cavity, with the one-half drift tube mounted on the entrance being numbered zero.
3. The DTM's are numbered according to the drift tube in which they are to be placed, i.e., the magnet for drift tube number three is designated as DTM-3.
4. The forces on a magnet parallel to the axis of the machine are called axial forces and those at right angles to the axis are called offset forces.
5. Forces and distances in the beam direction are designated as positive, those against the beam direction as negative.

THEORETICAL DISCUSSION

Focussing Equation and References

It has been shown[1] for a magnetic lens of the type that is being used in the drift tubes that the focal length is inversely pro-

---

1. Electron Optics and Electron Microscope, U. K. Zworyken, G. A. Morton, E. G. Ramberg, J. Hellier, A. U. Vance (pg. 519).

portional to the integral of the square of the magnetic field taken along the axis of the machine, i.e.

$$\frac{1}{f} \propto \int_{-\infty}^{+\infty} H_1^2 \, dl$$

The value of this integral required to produce the necessary focussing of the deuteron beam in the Mark I machine has been calculated by L. R. Henrich for each of the eight drift tube magnets. These values are tabulated below.

DTM	$\int_{-\infty}^{+\infty} H_1^2 \, dl$ (required for deuterons)
1	4.687×10^8 gauss^2 inches
2	7.829
3	8.879
4	8.656
5	8.946
6	9.295
7	10.928
8	12.533

Scaling Factors

The information that is obtained from the model magnets must be multiplied by the proper factors to predict the corresponding values for the full scale machine.

Permeability. All of the measurements on the models were taken at the same magnetic fields that will be required of the full scale magnets. Hence, the permeability of the steel components in both the model and full scale machine will be equal, and the relative shapes of the magnetic fields will be the same.

Dimensional Scaling Factor. The model magnets were constructed on a scale that required no more than 12,800 amps per square inch in the exciting coils to give the desired field. This allowed enough time to make the measurements before the magnets overheated. The model for DTM-1 was constructed 3/10 scale while DTM-3 through DTM-8 were constructed 1/6 scale. This required two models of DTM-2--one 3/10 scale that was used for tests with DTM-1 and one 1/6 scale that was used for tests with DTM-3.

Ampere Turns. The ampere turns required to give the same magnetic field (flux density) at relative positions on similar magnets is directly proportional to the dimensional scaling factors of the magnets. Mathematically:

$$\text{mmf} = 4\pi \ \Sigma \ \text{NI} = \int \frac{B\,dl}{\mu}$$

mmf = magnetomotive force
NI = ampere turns
B = magnetic flux density
μ = permeability
dl = element of length

Since μ and B are constants and dl in proportional to the scaling factor,

$$(\text{NI})_{\text{full scale}} = (\text{NI})_{\text{model}} \times \text{scaling factor}$$

Forces. The force on like parts of relative magnetic systems is proportional to the square of the dimensional scaling factor.

Mathematically:

$$F_x = \frac{dw}{dx} \qquad dw = \frac{\mu H^2 \, dv}{8\pi}$$

dw = incremental increase in energy of field due to displacement in direction x
dx = incremental increase in linear dimensions in direction of force
H = magnetizing force

dv = incremental increase in volume
dA = incremental increase in area

$$\text{then } dw = \frac{\mu H^2 \, dA \, dx}{8\pi} \quad \text{and} \quad \frac{F_x}{dA} = \frac{\mu H^2}{8\pi}$$

μ and H do not change in going from model to full scale, therefore the force per unit area is the same for both. Since the area is proportional to the square of the scaling factor then:

$$(F)_{\text{full scale}} = (F)_{\text{model}} \times (\text{Scaling factor})^2$$

MECHANICAL DESIGN

The model magnets were constructed to scale the full scale units as nearly as possible. The notable exceptions were the steel terminal box and the steel support structure on the outer shell which were not included on the model magnets. The steel components were constructed from the UCRL stock of mild steel (this steel in the range SAE 1010 to SAE 1040). The coils were made of 1/2 by 1/16 copper strap insulated with glass tape. The whole assembly--coils plus steel members--was clamped together with dural and brass clamps. The model coils were assembled to the scale dimensions for the inner diameter, the outer diameter, and the axial length. The turns were distributed inside these dimensions as uniformaly as was practical. Because the coil design for DTM-5, 6, 7, 8, was identical it was sufficient to construct only two model coils on this design. Figures 1, 2, 3, 4, 5 show steel parts and the coils of each magnet. Also included is a photograph, Figure 6, of all the magnets in the order they will be placed in the drift tubes.

MEASURING EQUIPMENT

Field Measurements

All the magnetic field measurements were made with the G.E. fluxmeter and search coils. The set ups for the various measurements are described in detail in a Radiation Laboratory report entitled "Procedures in Magnetic Measurements" by Robert E. Richardson (UCRL-454).

Forces Between Magnets

Axial Forces. A pair of neighboring magnets was mounted with their axes vertical. The upper magnet was supported rigidly from the floor while the lower magnet was mounted at the center of a platform. This platform was supported at one end by a pivot point on a continuous reading scale (Health-o-meter, Continental Scale Co. Chicago, cap. 300 lbs.) and at the other end by a ball bearing roller pivot. The magnet was mounted in this fashion to eliminate the effect of the magnetic field on the scale. This set up was calibrated for each measurement by placing known weights on the magnet while it rested on the center of the platform. The platform was carefully leveled for all force measurements. A non-magnetic dial indicator mounted on one magnet and resting on the other was used to measure small changes in distance between the magnets during the measurements of these forces. See Figures 7 and 8.

Offset Forces. A set-up similar to that described for axial forces was used to measure the offset forces except the axes of the magnets were horizontal. The axial force of the magnet mounted on the platform was

canceled by a pantograph system. This pantograph system was mounted on the same structure that supported the fixed magnet and the four arms of the pantograph were carefully adjusted to the horizontal. Therefore only the offset force was read by the scale. The variation of the centerline to centerline distance and the axis to axis offset was measured by two non-magnetic dial indicators while these measurements were in progress. See Figures 9 and 10.

MEASUREMENTS

Magnetization

Three sets of measurements to determine flux density as a function of ampere turns were taken for each magnet. They are as follows.

1. One magnet on alone.
2. One magnet on and its positive adjacent magnet on.
3. One magnet on and its negative adjacent magnet on.

In the last two sets a constant ratio between the ampere turns of the two magnets was maintained. This ratio was determined by previous measurements.

Uniformity

Measurements were taken to determine the variation of flux density with position along the magnet axis. Two adjacent magnets were placed at the required centerline to centerline distance with the proper ampere turns in each magnet and with their fields opposing. Measurements were taken from the center of one magnet along the axis to the center of the other magnet. This data was taken for a given magnet and its positive

neighbor; the same magnet and its negative neighbor.

Forces Between Magnets

Measurements could be made with only two adjacent magnets in place at one time. Therefore it was necessary to get a combination of measurements so that the forces experienced in operation could be calculated. As a safety factor, force measurements were made at higher ampere turns than those required. These will be referred to as "maximum" ampere turns. DTM-1 was increased to 120 percent; DTM-2 to 115 percent; DTM-3, 4, 5, 6, 7, 8 to 110 percent of the required ampere turns. Force measurements were made at both the required and maximum ampere turns.

Axial Forces. Six groups of measurements for each magnet was necessary to determine the axial forces that are likely to be encountered in operation. They are as follows.

1. One magnet and its positive neighbor on.
2. One magnet and its negative neighbor on.
3. One magnet off and negative neighbor on.
4. One magnet on and negative neighbor off.
5. One magnet off and positive neighbor on.
6. One magnet on and positive neighbor off.

In the cases where both magnets are on, the measurements were taken with their magnetic fields opposing and with the proper value of ampere turns in each magnet. The force was measured as a function of the centerline to centerline spacing.

Offset Forces. Only the maximum offset forces that were likely to occur in operation were measured. This was done by connecting a magnet and its positive neighbor in series, fields repelling, and with the proper value of ampere turns in each magnet. The force was measured as a function of axis to axis offset.

RESULTS

Magnetization

Figure 11 shows flux density versus ampere turns for each magnet with its adjacent magnets on. The magnets are close enough together so that the field at the center of one magnet is affected by the adjacent magnets. The resultant field is the algebraic sum of the field with the magnet on alone plus the stray fields of its neighbors. This procedure is not exact for cases where iron is present but since the differences were small, the error is negligible. The total estimated error in these measurements is ± 3 percent.

Uniformity

The magnets are far enough apart that the relative shape of the magnetic field between a magnet and its positive neighbor will not be significantly affected by the field of other magnets. Therefore, by making a composite of the two curves measured--the magnet and its positive neighbor on; the magnet and its negative neighbor on--the only correction that must be made is for the effect described for the magnetization curves. The total estimated error on these uniformity curves is ± 3 percent. See Figures 12 and 13.

Ampere Turns

The required ampere turns listed on Table I are those which produce the $\int_{-\infty}^{+\infty} H_1^2 \, dl$ required for necessary focussing. The estimated error on the ampere turns is ± 4 percent.

Forces

Axial Forces. Axial forces resulting from the six measurements described previously are listed on Table I. They were calculated as follows.

a. The force on a given magnet when all the magnets are on equals the algebraic sum of forces with the given magnet and its positive neighbor on; the given magnet and its negative neighbor on.

b. The force on one magnet when it and its positive neighbor are on equals the algebraic sum of forces with the magnet and its positive neighbor on; the magnet on and its negative neighbor off.

c. The forces with one magnet and its negative neighbor on equals the algebraic sum of forces with the magnet and its negative neighbor on; the magnet and its positive neighbor off.

d. The force with one magnet off and its positive neighbor on was a direct measurement.

e. The force with one magnet off and its negative neighbor on was a direct measurement.

f. The force when one magnet is on alone equal the algebraic sum of forces with the magnet on and its negative neighbor off; the magnet on and its positive neighbor off.

Figures 14, 15, 16, 17, 18, 19, 20, 21 are graphs showing these forces vs. distance from operating position for required and maximum ampere turns. The estimated total error in these measurements is ± 6 percent.

Offset Forces. The offset forces were calculated from the measurements previously described by taking the sum of the forces measured with a magnet and its positive neighbor; the magnet and its negative neighbor. Figures 22 and 23 show these forces vs. offset distance. The gradient of the force is given by the slope of these cures. This gradient in pounds per inch of motion is listed on Table I. The estimated total error is ± 6 percent.

Information Division
6-27-52 gg

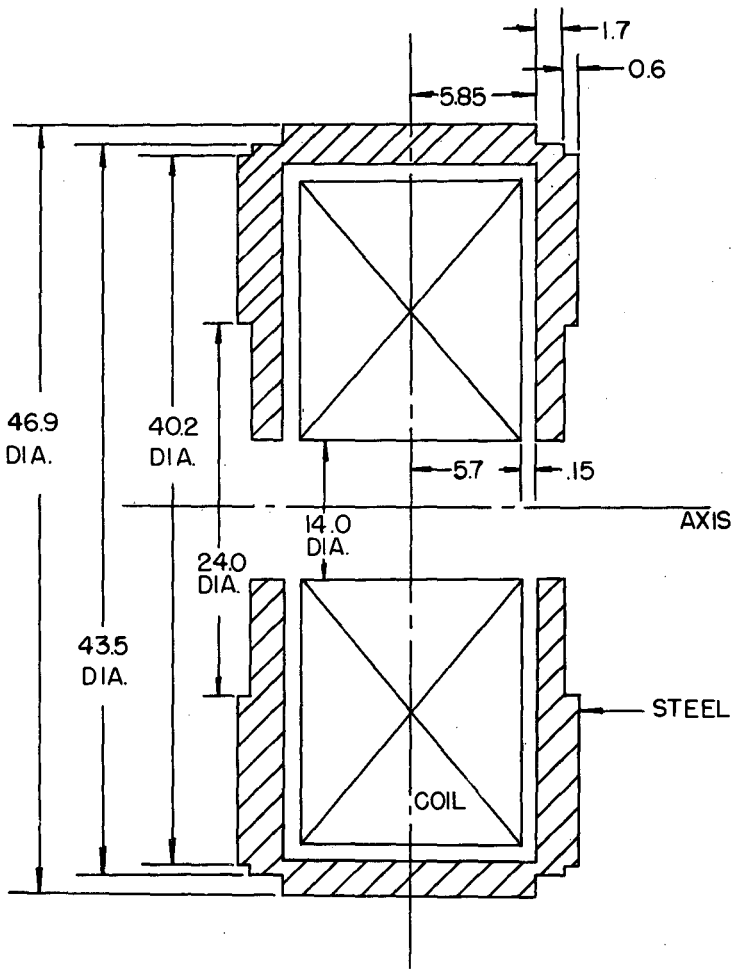

DTM - 1

CONFIDENTIAL

MU 3841

Fig. 1

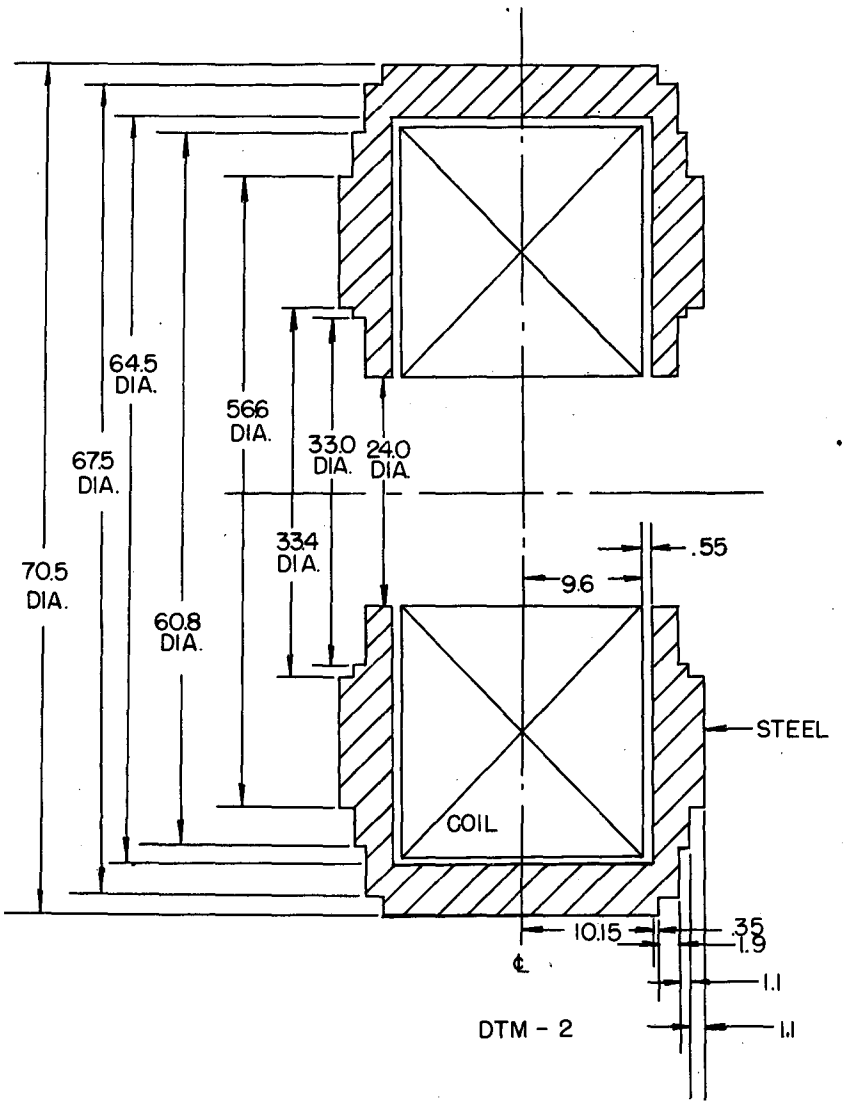

CONFIDENTIAL

MU 3842

Fig. 2

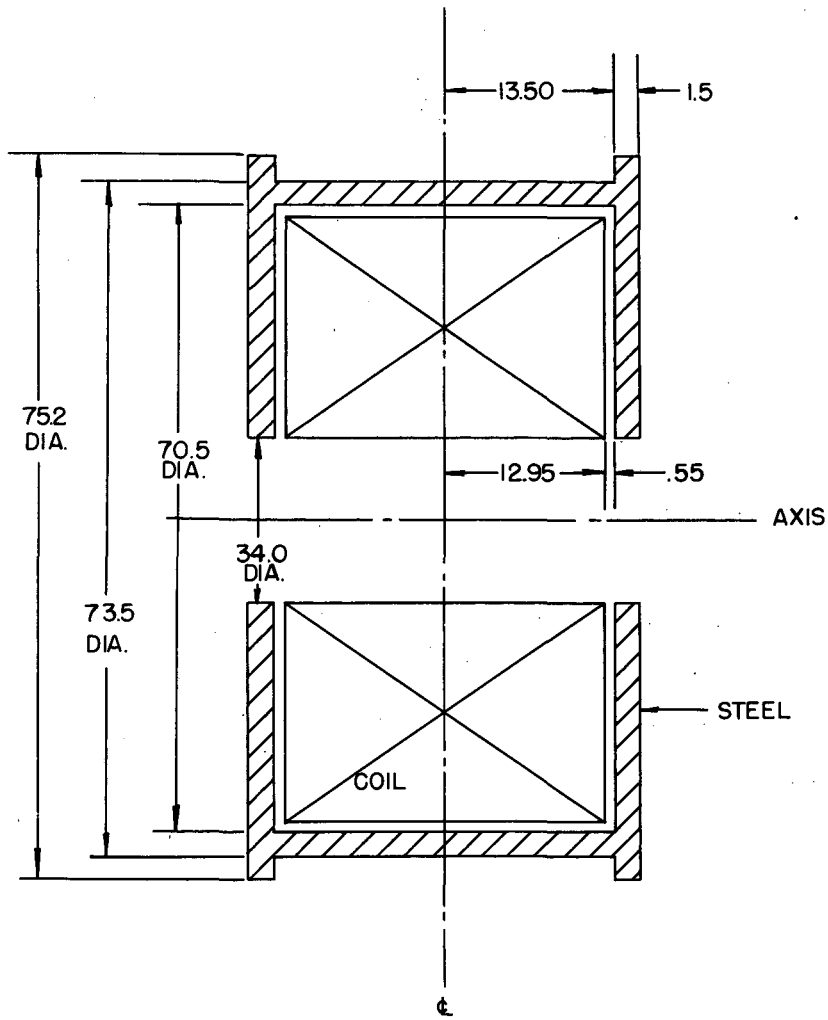

DTM - 3

MU3843

CONFIDENTIAL

Fig. 3

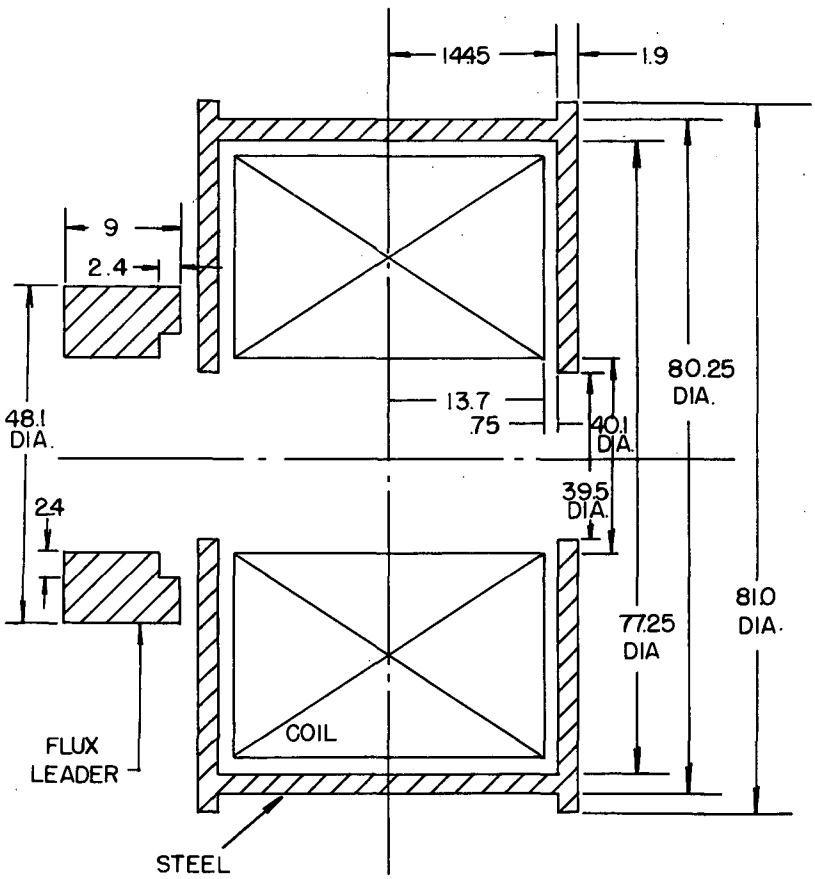

DTM -4

MU3844

CONFIDENTIAL

Fig. 4

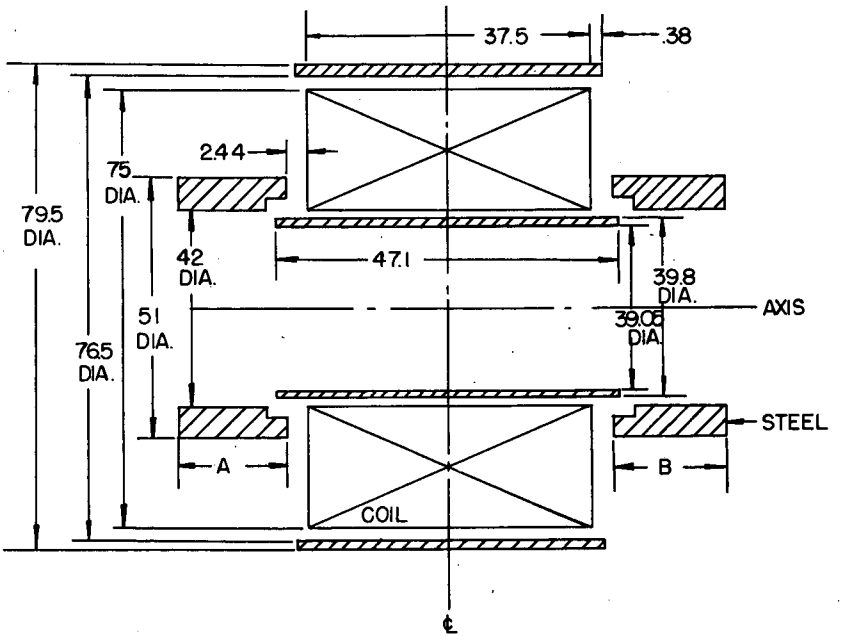

DTM #	A (ENT. FLUX LEADER)	B (EXIT FLUX LEADER)
5	8.95	6.59
6	15.99	14.21
7	21.38	24.00
8	33.28	28.31

DTM 5, DTM 6, DTM 7, DTM 8

CONFIDENTIAL

MU 3845

Fig. 5

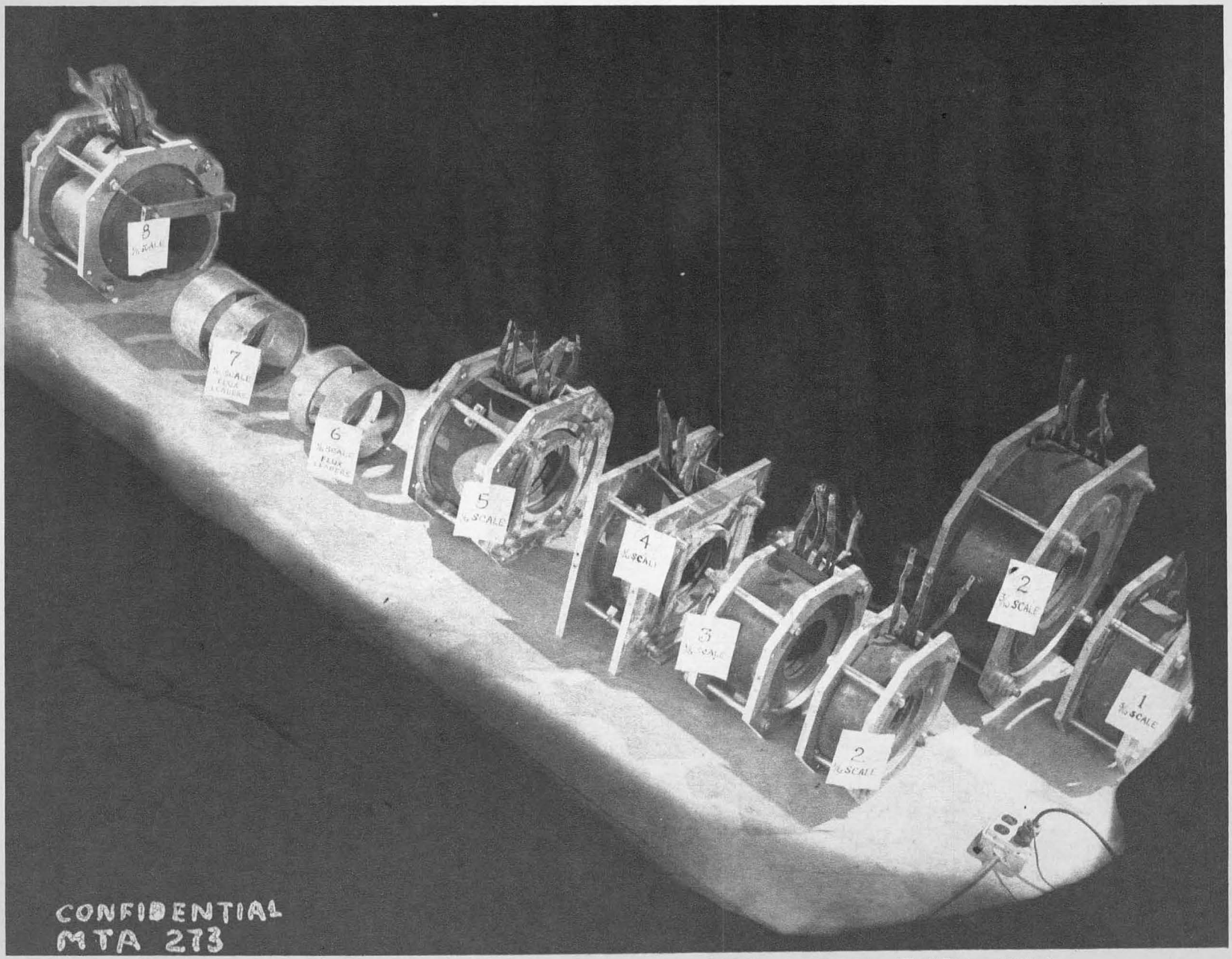

FIG. 6 MODEL DRIFT TUBE MAGNETS IN THE ORDER THEY WILL BE PLACED IN THE DRIFT TUBES

OZ 1184

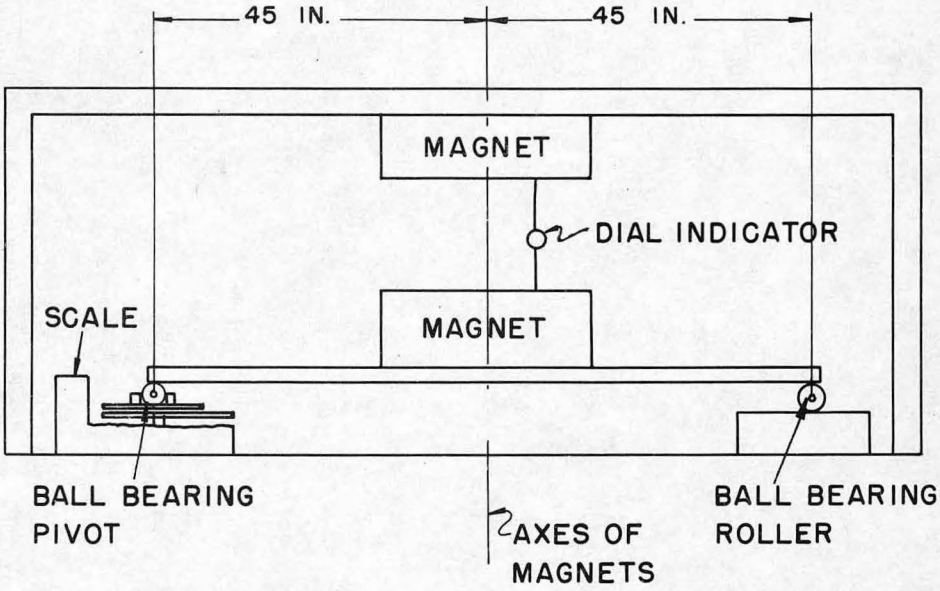

SCHEMATIC SKETCH OF AXIAL
FORCE MEASURING EQUIPMENT

CONFIDENTIAL

MU3859

Fig. 7

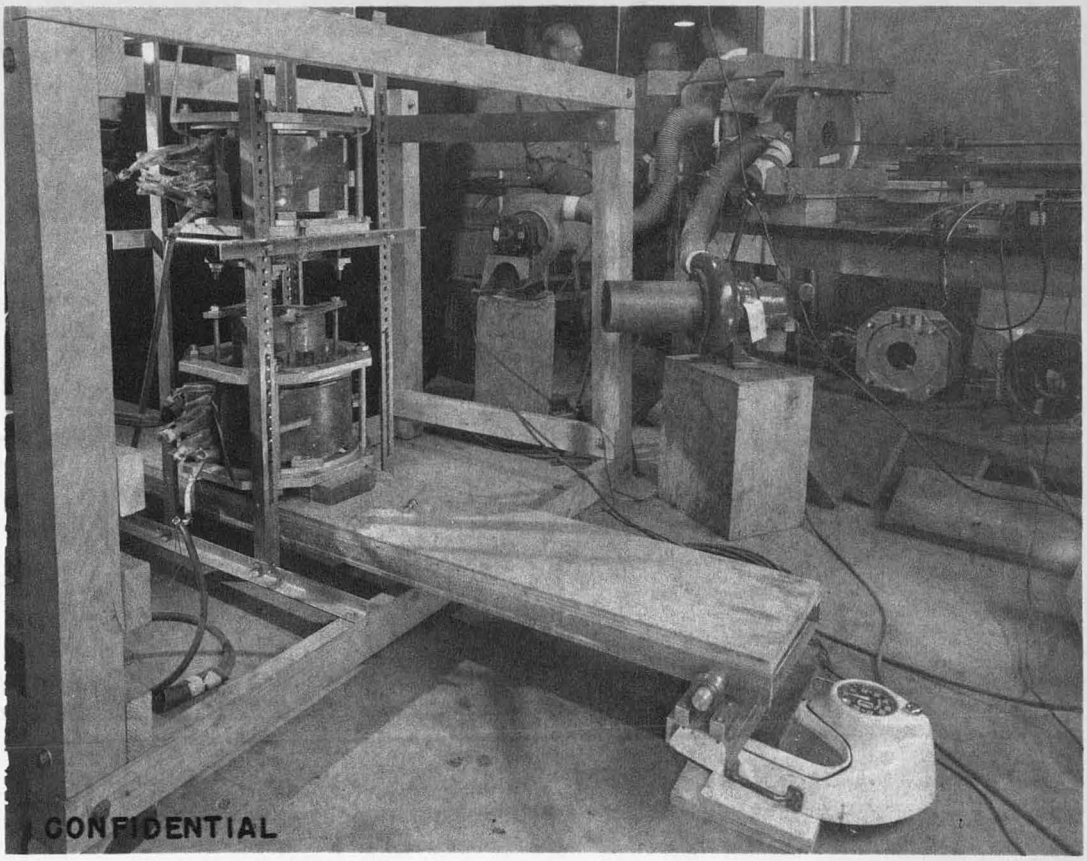

FIG. 8 AXIAL FORCE MEASURING EQUIPMENT

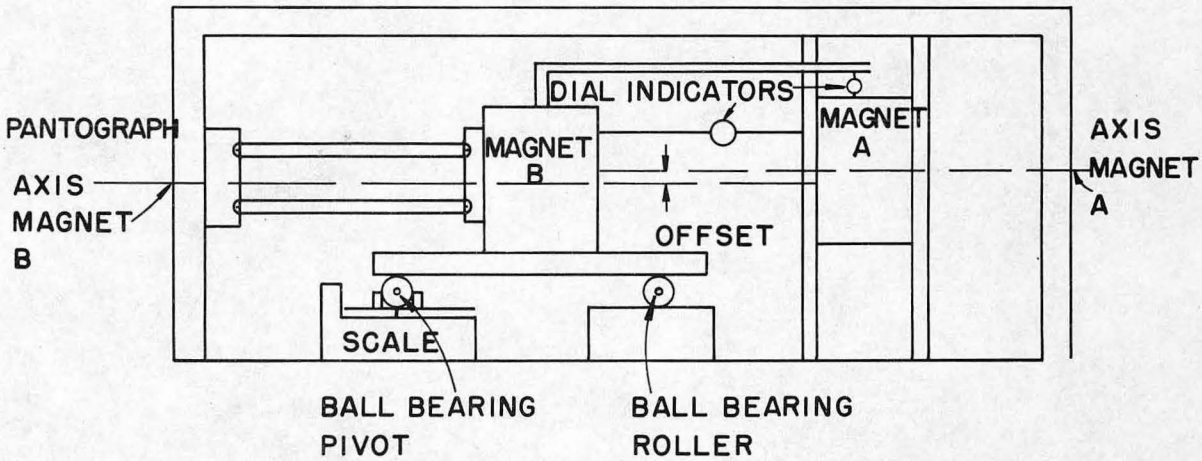

SCHEMATIC SKETCH OF OFFSET FORCE MEASURING EQUIPMENT

CONFIDENTIAL MU 3860

Fig. 9

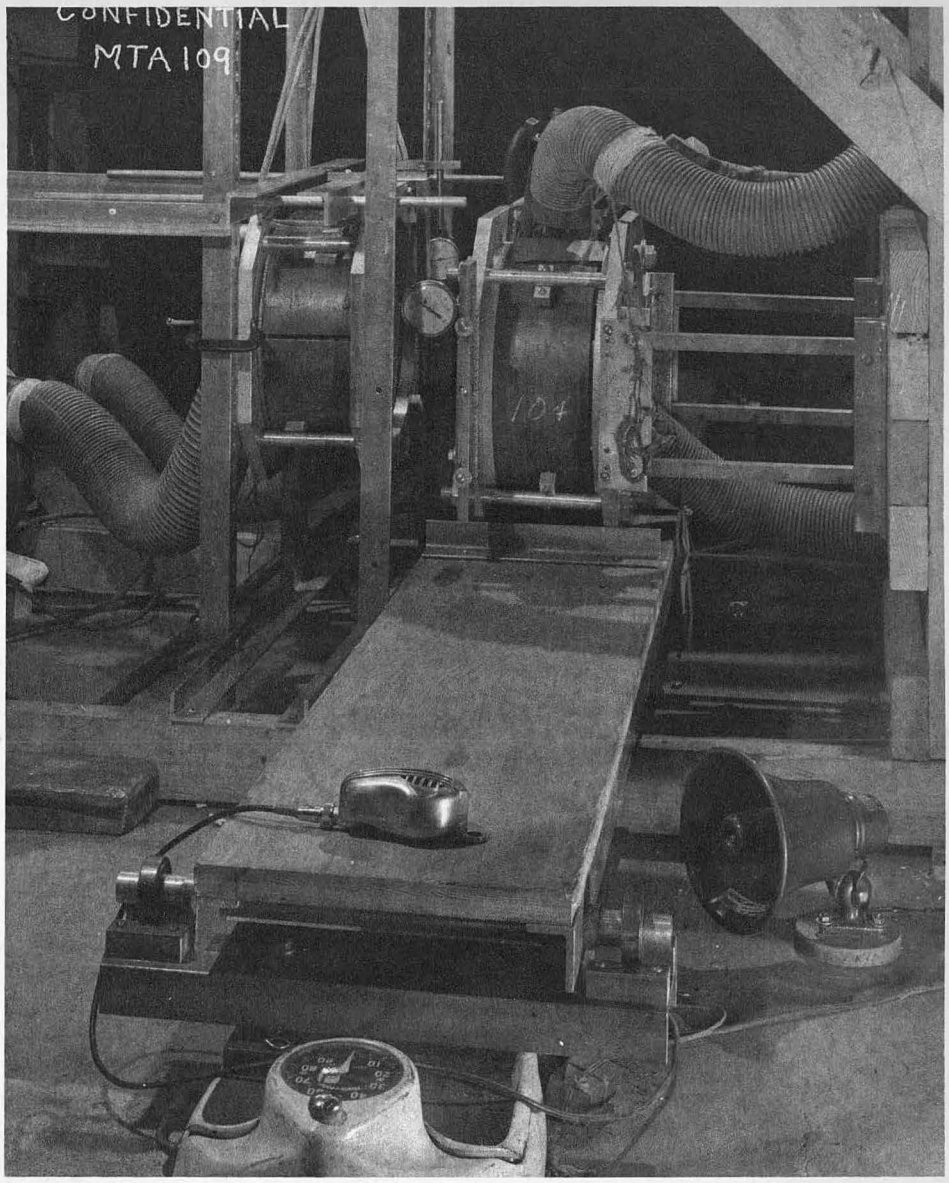

FIG. 10 OFFSET FORCE MEASURING EQUIPMENT

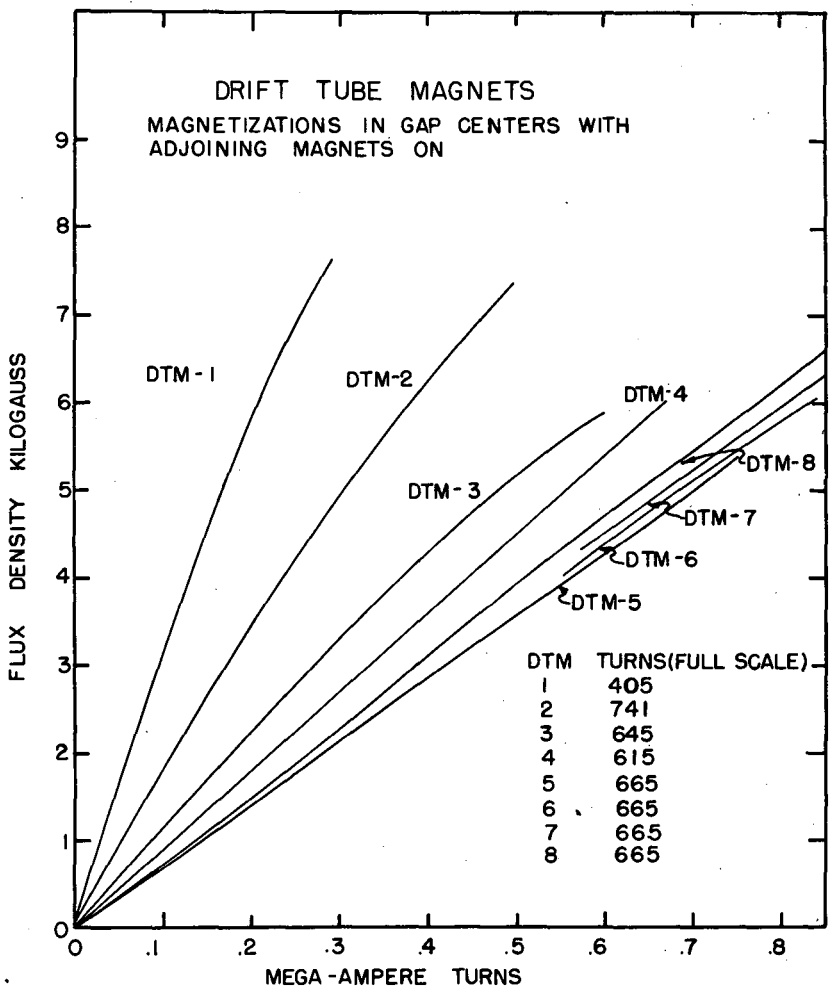

CONFIDENTIAL

MU 3856

Fig. 11

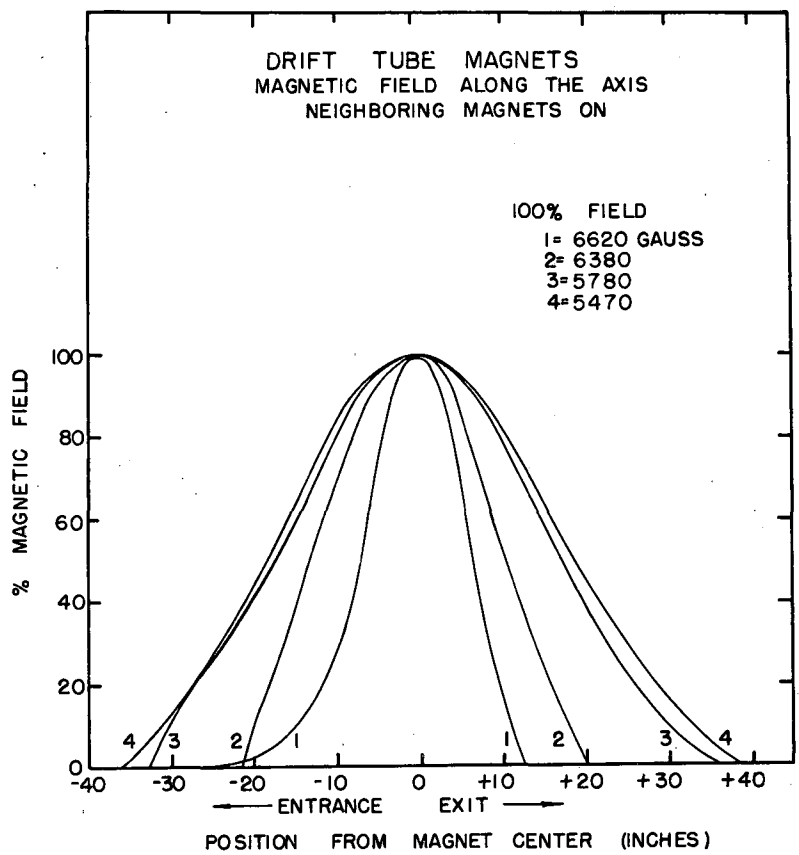

CONFIDENTIAL

Fig. 12

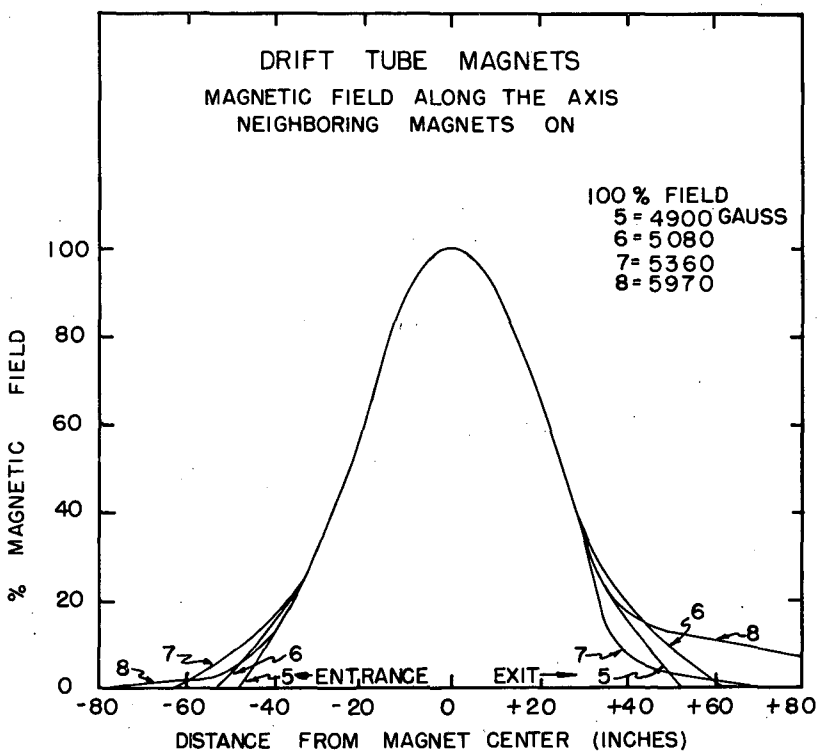

CONFIDENTIAL

Fig. 13

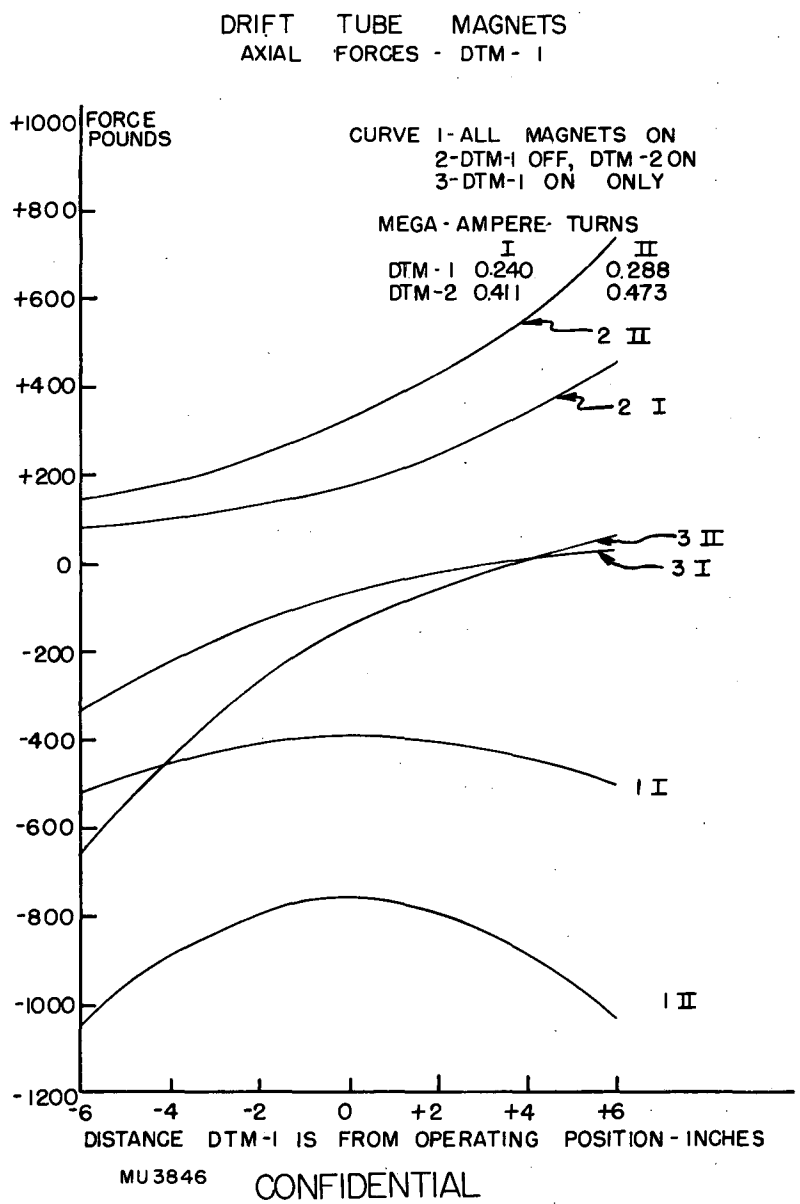
DRIFT TUBE MAGNETS
AXIAL FORCES - DTM - 1
FORCE POUNDS
+1000
+800
+600
+400
+200
0
-200
-400
-600
-800
-1000
-1200
CURVE 1-ALL MAGNETS ON
2-DTM-1 OFF, DTM-2 ON
3-DTM-1 ON ONLY
MEGA-AMPERE-TURNS
I II
DTM-1 0.240 0.288
DTM-2 0.411 0.473
2 II
2 I
3 II
3 I
1 I
1 II
-6 -4 -2 0 +2 +4 +6
DISTANCE DTM-1 IS FROM OPERATING POSITION - INCHES
MU3846
CONFIDENTIAL

Fig. 14

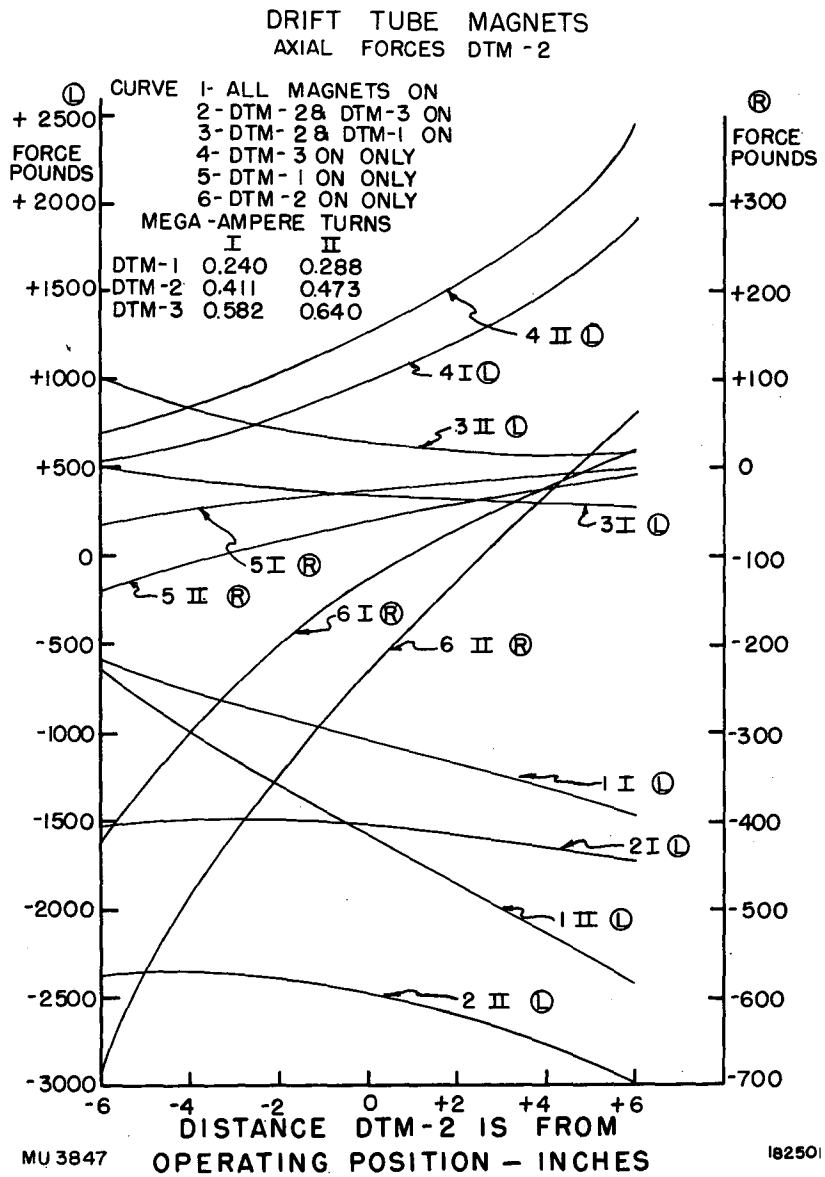

CONFIDENTIAL

Fig. 15

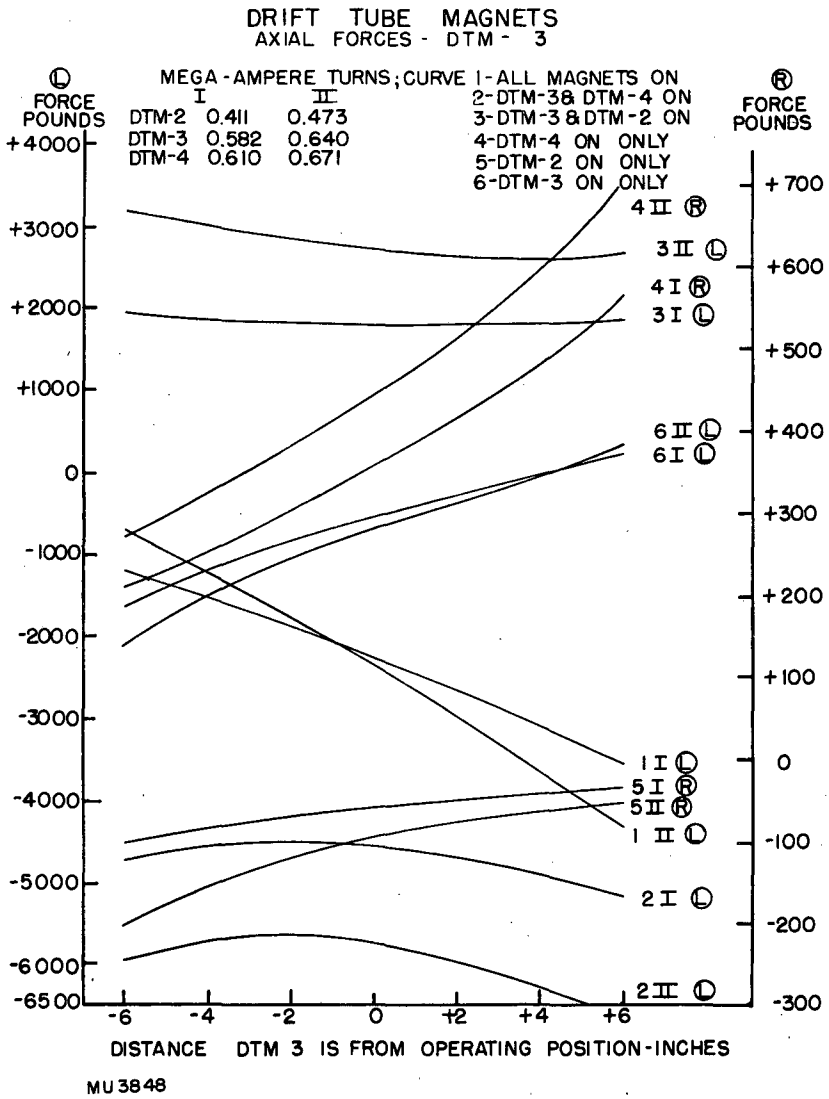

CONFIDENTIAL

Fig. 16

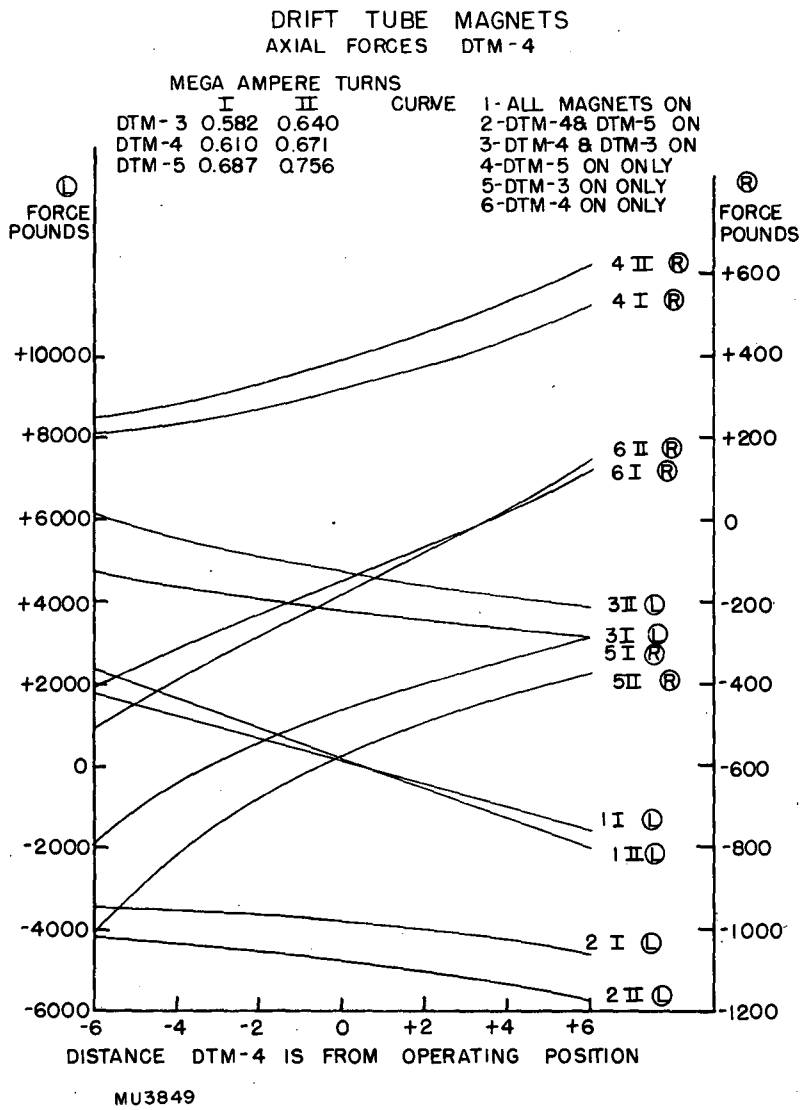

CONFIDENTIAL

Fig. 17

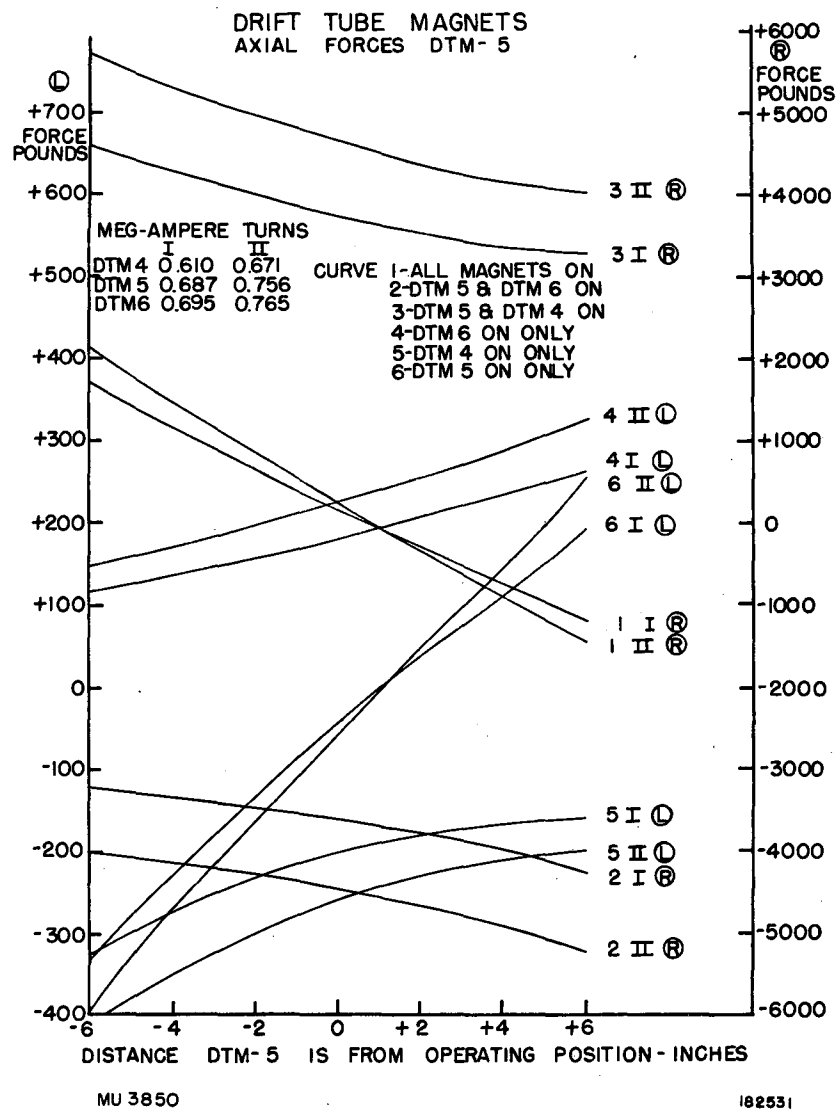

CONFIDENTIAL

Fig. 18

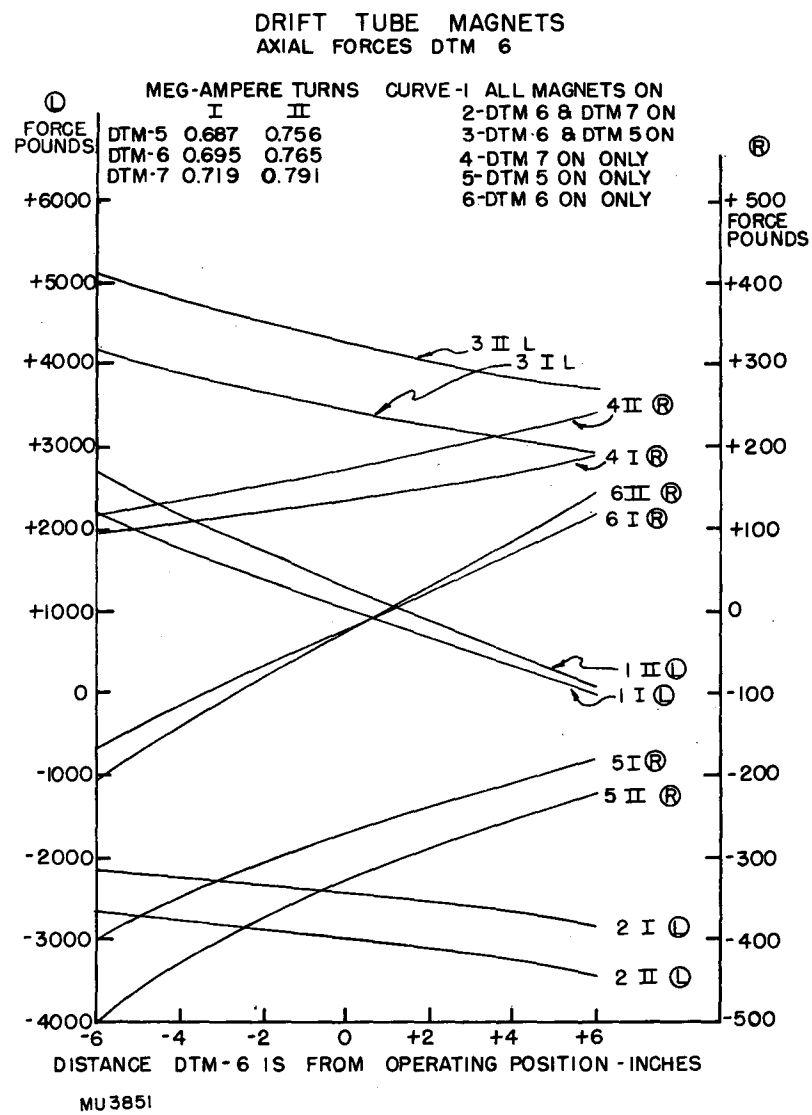

CONFIDENTIAL

Fig. 19

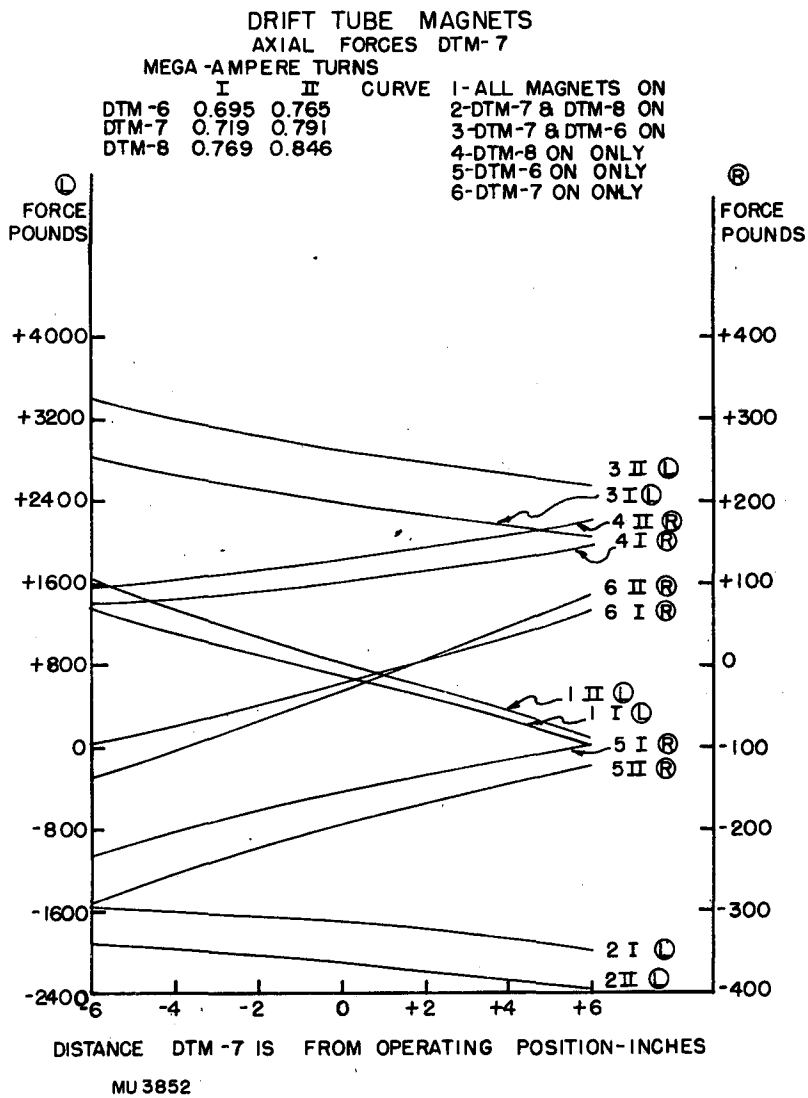

CONFIDENTIAL

Fig. 20

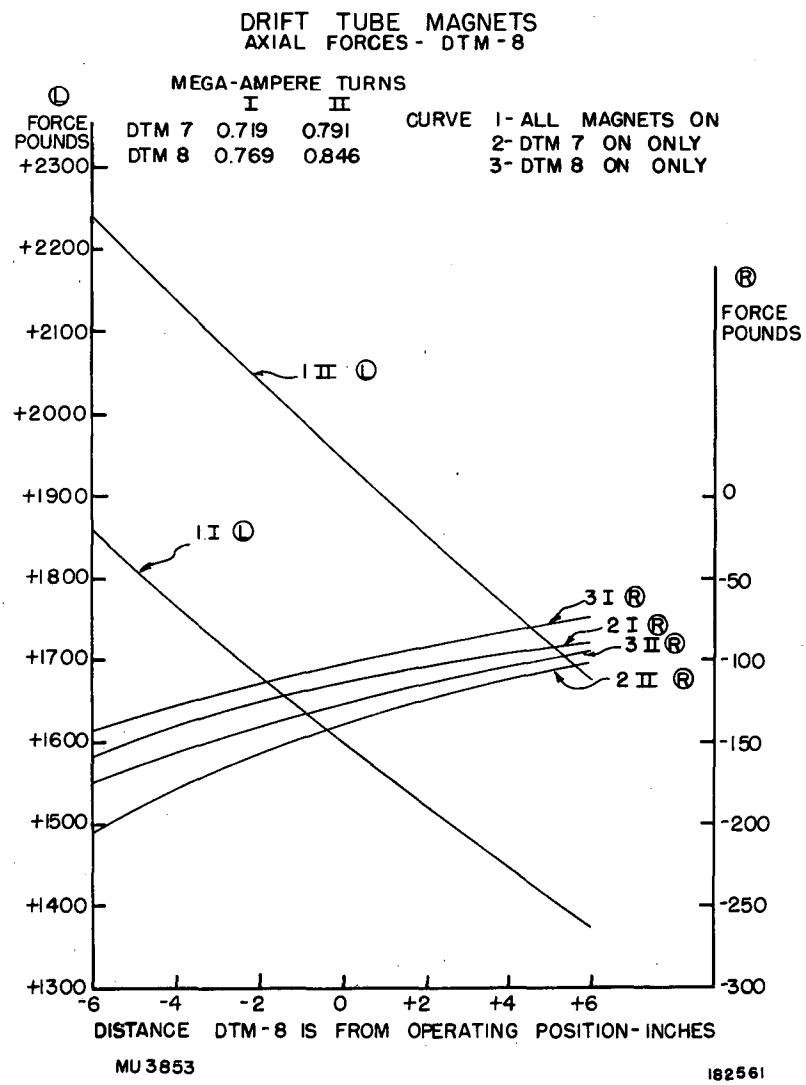

CONFIDENTIAL

Fig. 21

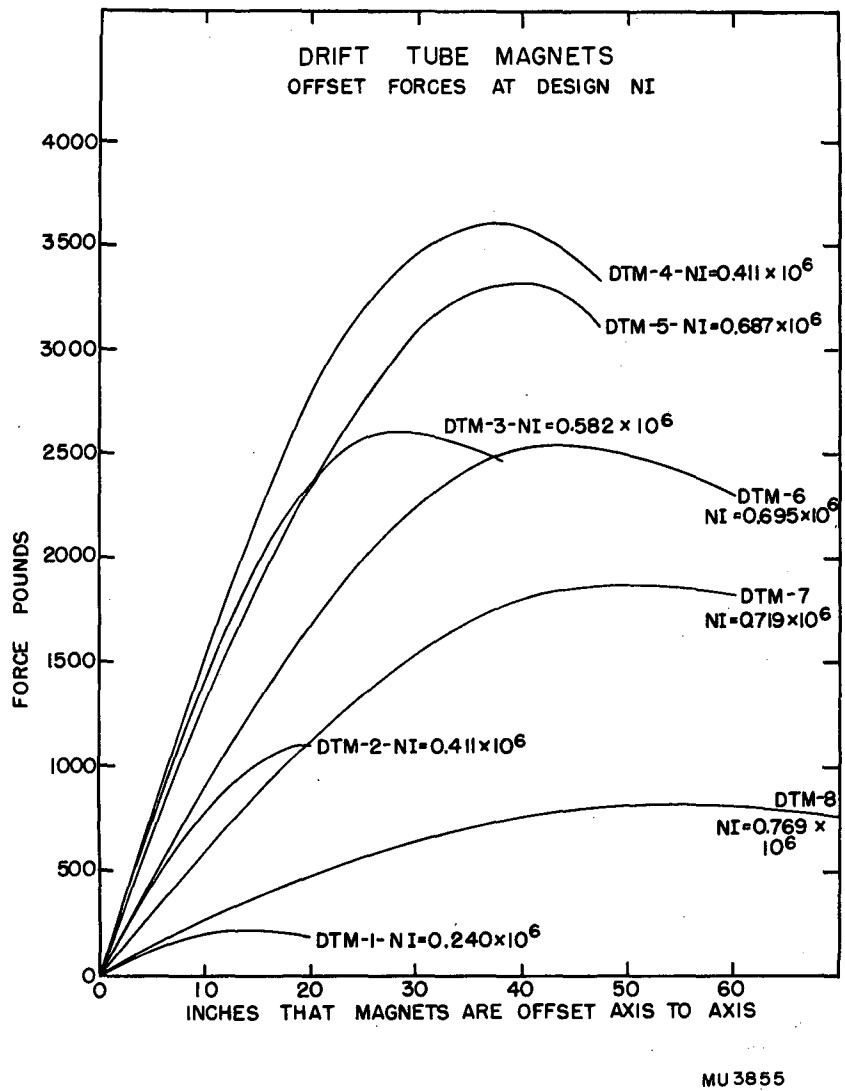

MU 3855

CONFIDENTIAL

Fig. 22

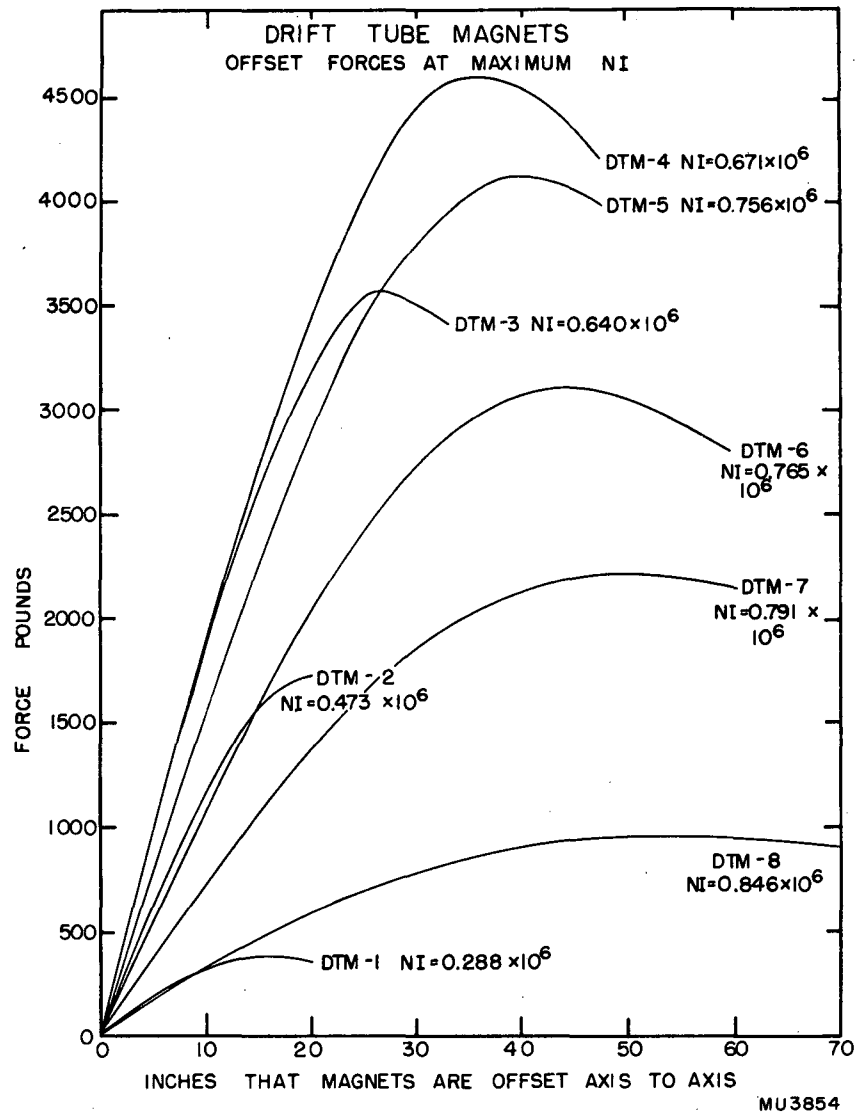

CONFIDENTIAL

Fig. 23

FORCE AND AMPERE TURNS ON DRIFT TUBE MAGNETS

	UNITS	MAGNET NUMBER 1	2	3	4	5	6	7	8
MEGA-AMPERE TURNS (NI)									
a. DESIGN VALUE		0.240	0.411	0.582	0.610	0.687	0.695	0.719	0.769
b. MAXIMUM VALUE		0.288	0.473	0.640	0.671	0.756	0.765	0.791	0.846
ALL MAGNETS ON	LBS.								
a. DESIGN NI		-390	-1040	-2260	+130	+170	+1020	+680	+1600
b. MAXIMUM NI		-760	-1580	-2360	+180	+250	+1300	+825	+1945
ONE MAGNET and + NEIGHBOR ON									
a. DESIGN NI	LBS.	-390	-1520	-4600	-3830	-3620	-2460	-1730	
b. MAXIMUM NI		-760	-1560	-5770	-4770	-4460	-3000	-2120	
ONE MAGNET and - NEIGHBOR ON									
a. DESIGN NI	LBS.		+360	+1810	+3800	+3740	+3460	+2390	+1600
b. MAXIMUM NI			+660	+2720	+4760	+4650	+4270	+2910	+1945
7 MAGNETS OFF and + NEIGHBOR ON									
a. DESIGN NI	LBS.	+180	+1000	+360	+320	+180	+135	+100	
b. MAXIMUM NI		+325	+1270	+450	+390	+225	+170	+130	
7 MAGNETS OFF and - NEIGHBOR ON									
a. DESIGN NI	LBS.		-25	-60	-470	-200	-270	-160	-110
b. MAXIMUM NI			-60	-95	-580	-260	-330	-200	-140
6 MAGNETS OFF, + and - NEIGHBORS ON									
a. DESIGN NI	LBS.		+975	+300	-150	-20	-135	-60	
b. MAXIMUM NI			+1210	+350	-190	-35	-160	-70	
7 MAGNETS OFF, ONE MAGNET ON									
a. DESIGN NI	LBS.	-65	-120	-530	-160	-50	-20	-25	-110
b. MAXIMUM NI		-140	-230	-690	-190	-60	-25	-30	-140
ALL MAGNETS ON - OFFSET FORCE									
a. DESIGN NI	LBS.	20	80	140	150	130	95	60	25
b. MAXIMUM NI	IN.	40	125	200	190	160	110	70	30

A. ALL MAGNETS HOOKED UP REPELLING WITH CONDITIONS SHOWN ON K-DT101-4, K-DT102-7, K-DT103-2, K-DT104-2, K-DTB.7-1; INSERTS ON X-DT-1, CENTERLINE TO CENTERLINE DISTANCES ON X-DT-2.
B. ALL MAGNETS IN OPERATING POSITION
C. POSITIVE (+) IS IN DIRECTION OF BEAM
D. THE FORCE GRADIENT ON A GIVEN MAGNET IS IN POUNDS PER INCH OF OFFSET. THE OFFSET IS THE DISTANCE BETWEEN MAGNET AXES.
E. "MAXIMUM" REFERS TO 120% OF RATED CURRENT FOR NO. 1, 115% OF RATED CURRENT FOR NO. 2, 110% OF RATED CURRENT FOR NOS. 3,4,5,6,7,8.

MU 3861

Table I

CONFIDENTIAL

DECLASSIFIED

$$\frac{p^2}{2m} \times$$

CONFIDENTIAL