UCRL-16357 Rev.

University of California

Ernest O. Lawrence Radiation Laboratory

TWO-WEEK LOAN COPY

This is a Library Circulating Copy which may be borrowed for two weeks. For a personal retention copy, call Tech. Info. Division, Ext. 5545

TECHNIQUES OF MAGNETIC-FIELD MEASUREMENT

Berkeley, California

DISCLAIMER

This document was prepared as an account of work sponsored by the United States Government. While this document is believed to contain correct information, neither the United States Government nor any agency thereof, nor the Regents of the University of California, nor any of their employees, makes any warranty, express or implied, or assumes any legal responsibility for the accuracy, completeness, or usefulness of any information, apparatus, product, or process disclosed, or represents that its use would not infringe privately owned rights. Reference herein to any specific commercial product, process, or service by its trade name, trademark, manufacturer, or otherwise, does not necessarily constitute or imply its endorsement, recommendation, or favoring by the United States Government or any agency thereof, or the Regents of the University of California. The views and opinions of authors expressed herein do not necessarily state or reflect those of the United States Government or any agency thereof or the Regents of the University of California.

Paper for International Symposium on
Magnet Technology, Stanford,
September 8-10, 1965

UCRL-16357 Rev.

UNIVERSITY OF CALIFORNIA
Lawrence Radiation Laboratory
Berkeley, California

AEC Contract No. W-7405-eng-48

TECHNIQUES OF MAGNETIC-FIELD MEASUREMENT

Peter G. Watson and Ronald F. DiGregorio

August 31, 1965

TECHNIQUES OF MAGNETIC-FIELD MEASUREMENT

Peter G. Watson and Ronald F. DiGregorio

Lawrence Radiation Laboratory
University of California
Berkeley, California

A survey of the most useful techniques of magnetic measurement is presented. Emphasis is placed on the inherent advantages and limitations of each method, on recent improvements, and on the degree of accuracy attainable at present. Magnetic measuring systems are considered. Factors such as positioning equipment, data recording and processing, and overall cost of measurement are discussed in terms of two systems now in use at the Lawrence Radiation Laboratory--the "search-coil Zip-Track" system and the "Rapid Mapper."

Introduction

The subject of magnetic-field measurement is rather broad because of the wide range of measuring problems and the large variety of equipment available. Fortunately, two relatively recent surveys in the literature go into the subject quite thoroughly, namely the papers of Germain[1] in 1963 and of Symonds[2] in 1955. Both authors present extensive bibliographies on the subject. We therefore limit our discussion to a brief description of the most widely used methods of field measurement, and refer the reader to these and other papers when a more thorough discussion is in order.* We stress the inherent advantages and limitations of each method and discuss recent improvements as well as the present degree of accuracy attainable.

In addition to a consideration of the basic sensing techniques, a number of other factors are involved in magnetic measurements which deserve attention. These include positioning techniques, data recording and processing, and overall cost of measurement. As an illustration of these factors, we describe two systems now in use at the Lawrence Radiation Laboratory (LRL) that have not been reported previously.

Sensing Methods

Magnetic Resonance

Magnetic-field measurement by nuclear magnetic resonance (NMR) has been very well described.[2-4] Simply stated, if one places a vial of water in a magnetic field, the hydrogen nuclei in the water momentarily precess about the field vector because of the characteristic spin of the hydrogen nucleus. This precession frequency, known as the Larmor frequency, is directly proportional to the magnetic field and is given by

$$f = \frac{\gamma_P'}{2\pi} H, \qquad (1)$$

where γ_P' is the gyromagnetic constant of protons in water. The field is measured by exciting the water sample with an rf oscillator and measuring the frequency at which energy is either absorbed by the sample (resonance absorption) or is coupled into a detecting coil normal to the driving coil (nuclear induction). For magnetic measurements over a wide range of flux densities, resonance absorption is generally used. Nuclear induction probes, although capable of greater resolution, are delicate to adjust and are frequency dependent.[60] The NMR output signal may be displayed on an oscilloscope if the system is made to sweep repeatedly through the resonant condition. To this end, a small ac signal may be superimposed upon the dc magnetic field by means of Helmholtz coils, or the rf driving signal may by modulated.[5]

The principle of electron paramagnetic resonance (EPR) is identical to that of NMR, except that the free radical DPPH (1,1-diphenyl, 2-picrylhydrazil) is used as a sample, and the electron spin resonance is measured.[2,6]

Magnetic-resonance techniques have the unique advantage of being primary reference standards; there is no temperature dependence, and the probe response is absolutely linear. Since frequency can be measured to great precision, the techniques are ultimately limited in accuracy only by our knowledge of the gyromagnetic ratios, which are now known to 7 parts per million.[7,8] Measurement accuracy of 1 part in 10^4 is easily attained, and 1 part in 10^5 is attained in some of the more elaborate systems.

Unfortunately, resonance techniques have many limitations. First, the range of field magnitudes that can be measured with a single instrument is limited both by loss of signal amplitude with decreasing frequency and by frequency-range limitations of the instrument. Resonance signal amplitudes vary as the square of the field and, for NMR, become too weak for adequate detection below about 100 G.[9] Fields up to hundreds of kilogauss can, in principle, be measured by NMR; however, the cost of broad-frequency-range equipment becomes a severe limitation. In practice, limited-frequency-range apparatus is employed and a D_2O sample is commonly used to supplement the water sample. Since the γ of the proton is some six and one half times that of the

* For a particularly comprehensive listing of current reports on magnetic field measurement the reader is referred to Science Abstracts, Section A (Physics Abstracts).

deuteron, fields of many times the magnitude measurable with proton resonance can be measured by deuteron resonance using the same apparatus (although the D_2O sample signal amplitude is considerably smaller than that for water). With EPR, fields below 1 G can be measured, since the electron's gyromagnetic ratio is some 660 times that of the proton. The upper limit for EPR using conventional circuitry is about 300 G, because of the high electron resonant frequencies involved. With waveguide and cavity techniques, EPR is useful in the kilogauss region, although waveguide bandwidths limit measurement to discrete ranges.[2,6]

A second limitation of the resonance technique is that it is usually unsuited to measurement of even moderately nonuniform fields, since a variation of only a few gauss over the sample volume is sufficient to obliterate the resonance peak.[10,11] To alleviate this effect, the trend has been to go to smaller sample sizes at the expense of signal amplitude. Sample volumes as small as a 2-mm cube have been used which permit measurements in field gradients up to 15 G/cm. Use of a long-time constant lock-in amplifier with such a sample has extended the measurement capability to 100 G/cm fields.[12] Probes incorporating orthogonal-field compensating coils can extend the range of usefulness of NMR to gradients of thousands of gauss/cm in certain types of inhomogeneous field measurements.[13,14]

For time-varying fields, NMR measurements are limited by the proton relaxation time. At the cost of decreased resolution, relaxation times as short as 6.5×10^{-4} sec can be obtained by proper doping of the water sample with a paramagnetic salt.[2] Microsecond time constants are achieved using EPR, although sample linewidths limit resolution to a few gauss.[62]

Considerable difficulty is experienced with rf signal loss in long probe cables, especially with weak signals from small samples. One solution to this problem is to include the rf detector in the probe itself.[15]

Observing resonance is often difficult because the resonance peak is narrow, its amplitude may be quite small, and one does not know if the driving frequency is too high or too low.

Despite the trend toward miniature probes and solid-state circuitry, magnetic resonance probes tend, in general, to be more bulky and delicate than some of the other types, and the associated electronics tends to be more complex and expensive.

Because of these many inherent limitations and practical inconveniences, resonance techniques are employed primarily for monitoring or regulating fields, and for the calibration of other measuring systems.

Wire-Orbit ("Floating Wire") Technique

The trajectory of a charged particle in a magnetic field may be simulated by a thin current-carrying wire under tension. The technique is commonly used for evaluating the focusing and bending properties of magnets used in high-energy physics experiments.[22,23]

In order to determine the focal point of a quadrupole lens, for example, the orbit wire is attached at one end to a point corresponding to the effective beam source. The wire then passes through the magnet and over a pulley which is positioned somewhere between the magnet and the focal point to be determined. The pulley must be placed in front of the focal point if the wire position is to be stable.[24] Weights are attached to provide a constant tension in the wire according to the relation

$$i/T = -C/P, \qquad (2)$$

where i is the current in the wire, T is the tension, and C/P is the ratio of charge to momentum of the particles to be simulated. The wire then aligns itself in an equilibrium position corresponding to the orbit of the particles. If the pulley is displaced laterally, a new orbital path is taken. By measuring the wire position and extrapolating to the point of intersection of such orbits, the focal point of the magnet may be found.

Wire orbiting requires careful optical alignment of the test components and the magnet being studied, and even with expensive precision equipment, wire position measurements can be difficult and time-consuming. In addition to positioning uncertainties, practical limitations on the accuracy of the measurements are due to wire stiffness, friction in the support pulley, and fluctuations in the wire and magnet currents. Some devices that have been used to overcome these limitations include rf detecting heads for locating the wire position,[25] special stranded orbit wire,[26] and pulleys supported by both oscillating bearings and air bearings.[27] Nevertheless, as the ratio of i/T increases, that is, as the energy of the simulated particle decreases, the difficulties mentioned above become much more significant. The wire-orbit technique, therefore, is generally limited to the simulation of high-energy beams. It has been used for evaluating particle momenta to within 1 part in 10^4.[25]

Hall Effect

The Hall effect is the generation of a voltage transverse to the flow of current in a conductor situated in a magnetic field. This Hall voltage is in a direction mutually perpendicular to the path of the current and the magnetic-field direction, and is given by the expression

$$V_h = \frac{K_h B i_c}{d}, \qquad (3)$$

where i_c is the control current, d is the conductor thickness, and K_h is the Hall constant of the material. For most material K_h is significantly

temperature dependent, and large inaccuracies are introduced by ambient temperature changes and ohmic heating in the sample. It is therefore advantageous to choose a material with a low temperature coefficient of K_h as well as a large value of K_h/ρ, where ρ is the resistivity of the sample. Indium-arsenide and indium-arsenide-phosphide best fill these criteria and are generally chosen for Hall plate elements.[1]

Deviation from the linearity expressed in the equation above is considerable for large magnetic fields, and may be as much as 5% in the 0- to 25-kG range.[31] The deviation is due to the combined effect of magneto-resistance in the output circuit[32] and the temperature dependence of K_h as mentioned above. It can be corrected for by using a calibration curve for each probe element. The effect of ambient temperature changes is best handled by employing some sort of temperature-correcting device in the probe itself. Heat sinks and constant-temperature probe enclosures,[33] as well as thermoelectric compensating networks have been utilized.[31]

Hall probes have the advantage that, when not temperature compensated, they can be made extremely small (standard transverse probes as thin as 0.006 in. are available), they are fairly rugged, and the associated electronic equipment is relatively simple. Temperature-corrected probes for more precise measurements tend to lose these advantages. Accurate measurements can be made in high-gradient fields once the effective center of the probe is determined,[34,35] and measurements can be made over the continuous range of field intensities.[36,37] Outputs are of the order of 0.3 V/kG-A.

Differential Hall probes consisting of two sets of Hall voltage terminals on a single plate have been used to measure field gradients directly. The Hall effect is well suited to ac or pulsed field measurement since the response time if less than 0.1 μsec.

The main drawback of the Hall effect is that it is unsuitable for high-precision measurement unless the probes are temperature-compensated and calibrated.[38] Aging effects in the probes have also been noted.[31,33] Suitably compensated and aged probes are capable of accuracies greater than 1 part in 10^4, whereas simple uncompensated probes give measurements with about 1% error when a calibration curve is used.

Magneto-resistance Effect

In principle the magneto-resistance effect constitutes one of the simplest methods of making magnetic measurements of moderate precision. It is closely associated with the Hall effect in that they both are due to the Lorentz force acting on moving charges in a conductor. Like the Hall effect, the magnetoresistive coefficient is greatest in some semiconductors. However, the actual sensitivity of a probe is proportional to the length of its resistive element. The best semiconductors are not useful for magneto-resistive purposes because they cannot be formed into long filaments. Bismuth is the most magneto-resistive substance which can, though with difficulty, be formed into wire and wound in small resistive coils.[43] It is for this reason that it has found application in field-measurement probes.

Bismuth resistor probes are nonlinear and relatively insensitive below about 1 kG. Their sensitivity is very temperature dependent and increases at lower temperatures. Because of these decided disadvantages, they have never enjoyed a great popularity. Nevertheless, there are are certain applications--such as measurement of superconductor fields in liquid helium--in which a simple thin-fibre bismuth probe proves very useful.[44] In such cryogenic applications, copper and other fibers have also been successfully used as magnetoresistive elements.[45] For accurate measurements under ambient condition, though, only bismuth is sufficiently sensitive, and the temperature of the probe must be carefully controlled.[46]

The bsimuth devices, like Hall devices, are useful up to the extreme conditions of field gradient and time variation. Although some aging effects have been observed, short-term accuracies approaching 0.01% have been attained with temperature-compensated probe units as small as 1/4 in. in diameter.[47,48]

Search Coil and Integrator

From Faraday's law it can be shown that the time integral of the voltage, V_c, induced in a coil subjected to a change in magnetic field is a measure of the change of flux linking the coil, and hence is a measure of the field change at the coil. If the integration is done by a simple RC circuit (Fig. 1), the change in voltage at the output of the integrator is given by

$$\Delta V = \frac{1}{RC} \int_{t_1}^{t_2} V_c \, dt \text{ (for } t_2 - t_1 << RC). \quad (4)$$

Since V_c is equal to $A_c \, dB/dt$, where A_c is the effective area of the coil, the field change at the coil is

$$B_2 - B_1 = (RC/A_c)\Delta V. \quad (5)$$

Unfortunately, the RC integrator is limited by the rapid decay of the integrated voltage. Equations (4) and (5) are valid only for the relatively short integration time $t_2 - t_1 << RC$, where RC is typically less than 10 sec.

A much more useful device for magnetic-measurement purposes is the Miller integrator (Fig. 2). With this circuit the voltage-decay time constant is GRC, where G is the gain of the amplifier (typically greater than 10^6). This means that theoretically the input voltage V_c can be integrated during a time which is, for the same error of

integration, G times longer than in the simple RC circuit. The input-output relationship can be shown to be

$$\Delta V = \frac{G}{G+1} \cdot \frac{1}{RC} \int_{t_1}^{t_2} V_c \, dt \text{ (for } t_2 - t_1 << GRC). \quad (6)$$

Hence, the integrating effect is essentially identical to that of the RC circuit. For a more complete discussion of the operation of the Miller integrator, see the Appendix.

With the Miller integrator, the integration error due to the decay rate of the integrated voltage is reduced to minor importance compared to the errors introduced by amplifier instability and dielectric absorption in the capacitor. Until recently, the most stable commercially available amplifiers had an input noise level of about 2 μV. Inexpensive units with superior characteristics are now becoming available, however. The best capacitors we have found use polystyrene as the dielectric. By selecting capacitors, dielectric absorption effects can be made less than 1 part in 10^4. Aside from the limitations on resolution, absolute accuracy is limited by temperature effects on the system calibration. We have found the temperature effect on the search coil area to be about 3×10^{-5} °C^{-1} in epoxy-encapsulated coils. The temperature coefficient of the RC time constant can be made quite small (about 10^{-5}° C^{-1}) by matching the resistive and capacitive components.

Integration can be accomplished with a number of other devices. The Grassot fluxmeter and the highly sensitive photoelectric integrator have been described previously.[2] The newest device is the "digital integrator", that is, an integrating digital voltmeter operated in the open integration mode. This instrument is essentially a Miller integrator in which the output voltage is reset by a calibrated voltage pulse each time it reaches a predetermined level. The frequency of the resetting pulses is a measure of the magnitude of the input voltage, whereas the algabraic sum of the pulses is a measure of the time integral of the input voltage. The pulses are counted so that a digital indication of this integral is always available. On the most sensitive range the stability of the digital integrator may be comparable to the best Miller integrators. A disadvantage of the device is that the maximum counting rate limits the permitted input signal, and it is undesirable to switch to a higher voltage range because this merely attenuates the input signal, thereby decreasing the signal to noise ratio.

For measurement of static fields by the search-coil technique, the necessary dB/dt signal can be obtained by either translating the coil between the field and some remote or shielded area, in which case either the initial or final field is known to be zero; by "flipping" or rotating the coil axis through 180 deg in the field; or by turning the field on or off with the coil in place, in which case the remanent field must be measured separately.

Of the various measurement techniques thus far described, the search-coil technique is certainly the most versatile. One reason for this is that search coils can be made in any number of shapes and sizes to facilitate different measurement tasks. For example, even in highly nonuniform fields, the field at a point can be measured by using a coil of "fluxball" geometry, or as is usually done, by using a specially dimensioned solenoidally wound coil, which closely approximates this design.[51, 57] Average field measurements are made by using a thin flat coil which encloses the field area to be measured. Field gradients are measured by using a matched pair of coils connected in opposition and bound together at a fixed distance.[58-59] Line integrals of the field along any path can be directly obtained using a long, thin coil shaped to the path.[60]

In quadrupole field measurements the search-coil technique has found wide application. Long coils, positioned at various radii with respect to the quadrupole axis and oriented to measure the radial field component are rotated through known angles in the field. Various combinations of such coils allow determination of the quadrupole magnetic center, the effective length, and the multipole content.[61]

Search coils are especially useful for measuring pulsed fields. Using a simple RC integrator one can accurately measure fields with time variation as high as 10^{16} G/sec, while Miller integrators can measure fields varying at rates of 10^7 G/sec.[62]

The search coil and integrator, then, provides an inexpensive and versatile system for making accurate magnetic measurements. Although it requires calibration, it is inherently linear, relatively temperature stable, and is capable of accuracies greater than 1 part in 10^4.

Miscellaneous Methods

Generally, almost any magnetic phenomenon can be incorporated into a device for measuring magnetic fields. Thus, the generator principle is utilized in the vibrating-coil[66] and rotating-coil[67] fluxmeters. Of the latter, there are commercial units that are convenient to use; nominal accuracy is 0.01%. The saturability of permeable material is utilized in peaking strips[2] and in magnetometers incorporating saturable-core transformers as detectors.[68, 69] In these, the accuracy can be as high as 0.01%. Transmission of light through a colloidal suspension has been used to determine the magnetic center in quadrupoles to high precision and is generally applicable to visual field mapping.[62] Very specialized techniques involve the use of the Zeeman effect, the magnetron principle, cathode-ray-tube devices, magneto-optical rotation of polarization planes, electrolytic tanks, and mercury-jet magnetometers.[1, 2, 70, 71]

Measuring Systems

Thus far our discussion of techniques has stressed the area of field-sensing devices. Let us now consider measuring systems as a whole. A system is the combination of a field-sensing device and other data sensors with positioning, sequencing, and recording equipment to preserve a useful record of the field to be measured. There is, of course, a great deal of latitude in the design of a system. In the simplest, a human operator may do the positioning, sequencing, and recording; in the most complex, these functions may be computer controlled. The more complex systems are used when a large number of measurements requiring repetitive operations are to be made.

The choice of a particular design is ultimately determined by:

1. The data desired (type, accuracy, detail, range, form, etc.).
2. The anticipated present and future use of the system.
3. The cost of building, maintaining, and operating the various possible systems.

To illustrate these factors in a concrete way, we now describe two systems presently in use at LRL, Berkeley, that were designed for application to a wide range of measuring problems. One is a simple analog system; the other is a complex digital system. We consider them on the basis of purpose, operation, accuracy, and cost.

"Zip Track" Analog System

The search-coil zip-track system is a special adaptation of a basic analog system utilizing a field-sensing device and an X-Y recorder for readout. An analog field-measuring system *per se* can plot magnetic field versus some other analog quantity such as time, position, current, or field. The zip track was specifically designed to provide quick and low-cost plots of magnetic-field profiles (field vs position) in one dimension. Families of measurements can be made in two and three dimensions and in rectangular and polar coordinates by straightforward elaboration of the positioning devices.

Figure 3 shows three sources connected in series to the input of the integrator: a field-sensing search coil of appropriate size, a bucking coil for canceling time variation of the field, and a flux standard for checking and calibrating the system. The search coil is mounted in a holder that moves through the magnetic field on a guide, or track. Motion is accomplished by a hand crank mechanically linked to the holder. The mechanical link is a rack and pinion gear which also operates a multiturn potentiometer attached to the track. This potentiometer is part of a biasing circuit that controls the horizontal coordinate of the X-Y recorder.

To take data, the system is first calibrated by a simple procedure whereby the recorder is adjusted for the desired probe motion and for the anticipated field change. Then, by using the flux standard, the vertical sensitivity of the recorder is adjusted so that integral values of magnetic field correspond to the grid of the graph paper. A suitable starting point is found on the graph paper, the pen is lowered, and a trace is made by moving the probe through its range. A good performance check is to reverse the probe travel to see if the pen exactly retraces its path on the graph.

Addition of a digital voltmeter (DVM) in parallel with the recorder permits greater accuracy and further simplifies setting up by serving as an absolute check on the X-Y recorder at all times. With a five-place DVM, accuracy would be limited by the stability of the integrator to about 1 part in 10^4.

Figure 4 is an example of a zip-track measurement showing a midgap field profile across the edge of a pole tip. The lower curve was obtained by switching to ten times higher sensitivity and shifting the pen position vertically so that field values could be read on the same scale (by shifting the decimal and adding 8,000). Accuracy of 0.1% was easily attained.

In summary, the principal benefits of the zip-track system are:

1. The output is in simple graphical form. This is often the most useful as well as the most meaningful presentation.
2. Data are recorded rapidly in their final form, data taking is rapid, and generally no "processing" is required.
3. The system is versatile and easily adapted to unusual measuring requirements.
4. Accuracy can be high, and measurement cost is always relatively low.

The Rapid-Mapper Digital System

The Rapid Mapper system was designed and fabricated at LRL in 1962.[72] Its purpose is to make detailed field maps of large magnets associated with accelerator beam transport systems. This measuring system automatically positons the probe, then samples the data and records it in a form suitable for computer processing. It is fast and versatile, yet relatively portable and capable of 0.01% field-measuring accuracy and 0.002-in. position accuracy. In addition, it has certain internal checks and warning devices so that system malfunctions can be quickly detected. The block diagram of the system (Fig. 5) shows the interrelationship of positioning equipment, data-sensing and recording components, and sequencing logic. The heart of the measuring system is a search coil, Miller integrator, and DVM. The voltmeter output is fed to a buffer memory and then recorded on punched paper tape. A "square-loop" flux standard is used in the integrator input circuit for manual and

automatic system calibration. Measurements in an X-Y coordinate system are made by positioning the search coil in a hollow 10-ft-long "guide tube" which is itself positioned by two cross drives as shown in Fig. 6. The X and Y positions are controlled by three stepping motors, while the Z (vertical) position is adjusted manually.

The basic measuring sequence, called a run, consists of a series of measurements made at one-inch intervals along the guide tube starting at a zero reference position inside a mu-metal shield at one end of the tube. In the course of a run each position is measured twice, once when going away from zero and once when returning to zero. At each position the integrated search-coil voltage is read by the DVM and recorded on punched paper tape. Certain auxiliary data is also recorded at the start and end of each run. A family of runs together with identifying and calibrating data constitutes a complete data-processing unit called a map.

The accuracy of measurement depends in large part on integrator stability and position accuracy during each run. Our integrator is stable enough that random drift introduces a measuring uncertainty of less than 1 part in 10^4 during the 55 sec required to measure the field twice at each of 110 locations. A comparison of the two measurements at each point is a very useful performance test for the system. By examining the pattern of the B (out) - B (back) differences, one can see (1) integrator drift, (2) magnet-current variations, (3) failures of the recording equipment, (4) improper operation of the run cycle, and (5) position backlash. Position uncertainty within the guide tube is minimized by a mechanism that indexes the search coil to a precision rack at each increment. Originally there was less than 0.0005 in. of position backlash. Now, after 50,000 passes through the guide tube and approximately 5,000,000 indexing operations, there is about 0.002 in. of backlash. Because the two field measurements at each point are averaged, this amount of backlash is inconsequential.

Figure 7 is a photograph of the Rapid Mapper console as it is today. With a system of this complexity it is wise to install various devices to make the system's operation as foolproof as possible. Thus, control switches code their settings for recording purposes; an audible alarm is actuated when the tape is low, when the DVM overloads, or when the physical position in either X or Y does not agree with the position counters; an auxiliary printer lists important check data during measurement, and various fixtures simplify alignment of the coordinate system.

Despite all our precautions, errors and malfunctions do occur, and sometimes partially garbled data must be processed. Therefore, our data-processing programs have been modified to tolerate and actually salvage otherwise unacceptable data.

Data processing begins at the magnet, where the operator scans an auxiliary-printer listing of corresponding field values and other "check" data. The operator also fills out a "pink-sheet form" for each map and identifies the full paper-tape reels. The paper tape and the pink sheets are then delivered to the computer center for data processing.

At the computer center the data is converted from paper tape to magnetic tape and the measured field values are listed along with the B(out)-B (back) differences. The converted "raw data" tape may be edited to remove extraneous data. This tape becomes the input for the computer program CERTIFY. The program automatically corrects discrepancies in the two halves of each run, prints out run corrections along with tests of data smoothness in X and Y, and generates an auxiliary tape of the corrected data. Further corrections or leveling and data comparisons can be done with the program OMNIBUS. At each step in the processing, all tapes and printouts are labeled for identification, and important remarks are entered on the pink sheets. At the end of each job the final data is merged onto a master auxiliary tape, and the original data onto a master raw-data tape. All intermediate tapes are released; CERTIFY printouts are bound, labeled, and stored; pink sheets are filed in the job data book; and the Rapid Mapper data index is brought up to date.

Once the master auxilliary tape is obtained, analysis of the field data can begin. The great advantage of data in digital form is manifest in the great diversity of field analyses that can be performed automatically by the computer. For example, field or field gradient profiles may be automatically plotted in the form of contour maps; line integrals along any path can be calculated; the paths of high-energy particles through the field can be determined; and the particle-focusing properties of the field can be evaluated. Thus it is the enormous capability for computer analysis that justifies the cost of elaborate digital systems such as the Rapid Mapper.

Field-Measuring Costs

Many factors contribute to the cost of magnetic measurements. Initially, there is the cost of constructing a suitable measuring system or modifying an existing system for a given job. When measurements are about to begin, there is the cost of setting up, aligning, and checking out the system. While measuring, there is the cost of operating and maintaining the equipment. A very significant and often overlooked factor is the cost of processing the data and guaranteeing its accuracy.

To illustrate these various cost factors, Table I compares cost data for the Zip-Track and the Rapid-Mapper systems. The figures we quote are rather approximate, but should serve as a guide for comparison with other systems. The cost of labor is assumed to be $9 per hour. Note that for the Rapid Mapper we have two columns,

one giving estimates based on optimum conditions, the other based on our actual experience to date. We are continually trying to improve our methods to bring the actual costs more closely in line with those theoretically possible.

Table I. System cost analysis, in dollars

	ZIP TRACK	RAPID MAPPER	
		Cost to duplicate	Development cost
Fabrication			
Mechanical	1000	10,000[1]	20,000
Electrical	4000[2]	20,000[1]	70,000
Computer programs	----	2,000	20,000
		Theoretical cost	Actual cost
Operation			
Setup and alignment	50	100	200
Data taking, per point	0.002[3]	0.002	0.015
Processing, per point	Negligible	0.01	0.03[4]
Maintenance, per month	Negligible	----	100
Overall cost, per point	0.004[3]	0.02	0.05

1. Using existing design drawings.
2. Cost of digital voltmeter not included.
3. We arbitrarily assume an equivalent data density of 10 points per inch of trace.
4. Including contour plots.

The rather high cost figures for fabricating the Rapid Mapper reflect a lot of development effort and subsequent modifications. A somewhat simpler version of the Rapid Mapper is now being built at the Stanford Linear Accelerator and more accurate duplication-cost figures should soon be available.

Conclusion

We have described in some detail the most popular techniques of magnetic-field measurement and have endeavored to give the reader some insight into their applicability. Those seeking more detailed information about any particular aspect of field-sensing techniques should find the bibliography helpful. In our discussion of systems we have tried by example to illustrate some of the more important factors relating to data aquisition and preservation.

Field-sensing devices and systems are becoming more sophisticated, easier to use, and more accurate in direct relation to the advances in electronic technology. For large scale measuring tasks, the era of computer controlled measuring systems is at hand. The cost of such systems is steadily dropping and the outlook for their widespread use is promising.

Acknowledgments

We are grateful for the help of the other members of the Magnet Test Group, including Fred Macondray, Don Nelson, and Janet Trapp. This work was done under the auspices of the U. S. Atomic Energy Commission.

Appendix

The operation of a Miller integrator circuit can be understood by considering Fig. 8. The circuit consists of a resistor R, a capacitor C, and a dc operational amplifier. The amplifier has high gain (-G), high input impedance, and wide bandwidth extending to zero frequency. For simplicity assume the voltages at b and f are initially zero. If a voltage V_c is impressed upon the input terminal g, a current i will flow as shown.

If the amplifier gain were infinite, the voltage drop from b to d would be constrained to zero, in order to satisfy the gain relation $G=e_{out}/e_{in}=\infty$. Thus the current i would equal $-V_c/R$, and all of this current would flow into capacitor C. After a time ΔT, the voltage appearing at f would be

$$V = \frac{1}{C}\int_{\Delta T} i\,dt = -\frac{1}{RC}\int_{\Delta T} V_c\,dt \quad .$$

The charge on the capacitor would not flow back through R because point b has to stay at zero voltage, hence the decay time constant would be infinite.

For a noninfinite gain, -G, the decay-time constant of the circuit becomes GRC, and the input-output relationship can be shown to be

$$V = \frac{G}{G+1}\cdot\frac{1}{RC}\int V_c\,dt \; .$$

It is interesting to note that the designation "Miller" integrator is associated with the Miller effect in triode tubes, wherein the grid-to-plate capacitance is effectively multiplied by the gain of the tube.

Bibliography

General Survey

[1] C. Germain, Bibliographical Review of the Methods of Measuring magnetic Fields, Nucl. Instr. Methods 21, 17 (1963).

[2] J. L. Symonds, Methods of Measuring Strong Magnetic Fields, Rept. Progr. Phys. 18, 83 (1955).

Magnetic Resonance

[3] Staff of Varian Assoc., NMR and EPR Spectroscopy, (Pergamon Press, New York, 1960).

[4] J. Pople et al., High Resolution NMR, (McGraw-Hill Book Co., New York, 1959).

[5] W. C. Olsen, A Transistorized FM Proton Magnetic Resonance System for the Measurement and Control of Magnetic Fields, Nucl. Instr. Methods 31, 237 (1964).

[6] J. J. Murray and R. A. Scholl, Dynamic Field Measurements with an EMR Magnetometer in the Pulsed Beam Switching Magnet, Stanford Linear Accelerator Report SLAC-26, Feb. 1964 (unpublished).

[7] P. L. Bender and R. L. Driscoll, A Free Precession Determination of the Proton Gyromagnetic Ratio, IRE Trans. Instr. I-7, 176 (1958).

[8] New Values for the Physical Constants, Nat. Bur. Std. (U. S.) Tech. News Bull. 47, 175 (1963).

[9] V. Dose, Simple Improvements of NMR Signals for Magnetic Field Measurements, Nucl. Instr. Methods 34, 253 (1965).

[10] Peter Kafitz, Nuclear Resonance Magnetic Field Measurements, UCRL-184, Aug. 1948 (unpublished).

[11] A. I. Zhernovoi and G. D. Latyshev, Use of Nuclear Resonance for the Measurement and Stabilization of Weak Magnetic Fields with Considerable Inhomogeneity, AEC-tr-6398, 306 (1964).

[12] W. L. Pierce and J. C. Hicks, Improved NMR Probe for Magnetic Field Measurements, Rev. Sci. Instr. 36, 202 (1965).

[13] G. Fricke and R. Neuhäusen, Measurement of Inhomogeneous Magnetic Fields with the Nuclear Resonance Method, Z. Angew. Phys. 17, 446 (1964) (in German).

[14] V. V. Frolov and I. A. Kolikova, Orthogonal Compensators of Inhomogeneity of Magnetic Field for NMR Spectrometer, Vestn. Leningr. Univ., No. 4, Ser. Fiz. i. Khim, No. 1, 59 (1963) (in Russian).

[15] R. L. Garwin and A. M. Patlach, Proton Magnetometer and Stable Oscillator for Remote Measurement of Strong Magnetic Fields, Rev. Sci. Instr. 36, 741 (1965).

[16] C. F. Hempstead et. al., Precise Ferromagnetic Resonance Magnetometers for Differential Measurements in Fields Characterized by Large Gradients, Rev. Sci. Instr. 35, 785 (1964).

[17] D. E. P. Silver, A Differential NMR Magnetometer, Electron. Eng. 36, 374 (1964).

[18] G. Bonnet and A. Salvi, Apparatus for Measuring Magnetic Fields, U. S. Patent 3 135 336, Aug. 18, 1964.

[19] Yu. N. Denisov, Nuclear Magnetometers for Measuring Field Strength and Gradient in Highly Inhomogeneous Fields, Instrum. Exper. Tech. No. 1, 89 (Nov. 1960) (Trans.)

[20] A. H. Maki and R. J. Volpicelli, Magnetic Field-Tracking Nuclear Resonance Gaussmeter, Rev. Sci. Instr. 36, 325 (1965).

[21] R. Freeman, Measurement of Magnetic Field Contours, J. Sci. Instr. 38, 318 (1961).

Wire Orbit

[22] E. Garçelon, Wire Orbit Measurements of Meson Quad II Magnet, UCID 2647, September 1965.

[23] O. Chamberlain, Optics of High Energy Beams, Ann. Rev. Nucl. Sci. 10, 161 (1960).

[24] P. Bounin and B. Milman, Improvement in the Floating Wire Method, Rev. Sci. Instr. 34, 1448 (1963).

[25] Uriel Vogel, "Floating Wire" Technique for Testing Magnetic Lenses, Rev. Sci. Instr. 36, 188 (1956).

[26] G. R. Lambertson, Tests of Flexible Wire for Particle Trajectory Studies, UCID-647, March 1956 (rev. Sept. 1961).

[27] H. Bichsel, Air Supported Pulley of Low Friction Used for Charged Particle Orbit Simulation, USC Tech. Rept. 5, Dec. 1962.

[28] I. Lutz and C. Pike, Current Regulator for Floating Wire Used in Magnet Calibration, Rev. Sci. Instr. 30, 841 (1959).

[29] G. R. Lambertson, Use of a Wire Loop in Locating the Orbital Surface of a Cyclotron Field, UCRL-3366, March 1956.

[30] D. R. Bach et al., Cyclotron Instrumentation for Nuclear Spectroscopy at Medium Resolution in Energy, Rev. Sci. Instr. 27, 516 (1956).

Hall Effect

[31] T. S. Dahlstrom et al., Precision Magnetic Field Measurements Using Hall Generators, USNRDL-tr-559, April 1962.

[32] J. K. Robbins, Hall Probe Measuring System Rutherford Laboratory cyclotron design note CDN/500/0151, May 1963.

[33] R. de Forest, A. Hall Probe Assembly for the Berkeley 88-Inch Cyclotron Magnet, UCRL-10085, March 1962.

[34] J. Brunner, The Hall Effect in the Inhomogeneous Magnetic Field, AEC-tr-5827, 172-5, 1960.

[35] H-J. Lippman and F. Kuhrt, The Effect of Geometry on the Hall Effect in the Case of Rectangular Semiconducting Plates, Z. Naturforsch. 13A, 474 91958).

[36] K. Strnat and R. A. Wolf, Construction and Calibration of a Hall Effect Gaussmeter, ASD-tr-273, June 1961.

[37] Y. Betko et al., A Description of a Circuit for magnetic Measurements Using Hall Generators, Joint Institute for Nuclear Research report JINR-P-1689, 1964.

[38] J. H. Dorst, Full Scale Magnetic Measurements on the Berkeley 88-Inch Cyclotron, Nucl. Instr. Methods 18, 19, 135 (1962).

[39] J. Jousselin, A Hall Magnetometer, Atompraxis 8, 140 (1962) (in French).

[40] M. S. Lubell and B. S. Chandrasekhar, Wide Range Magnetic Field Measurements at 4.2° K, Rev. Sci. Instr. 35, 906 (1964).

[41] G. A. Harasty, Investigation of the Problem of Using Hall Generator Devices for Regulation and Measurement of Magnetic Fields in Experimental Area Magnets for the ZGS, TID-17610, Aug. 1962.

[42] A. V. Soukas, Hall Probe Regulator Action and Hall Generator Evaluation, BNL-5750, June 1961.

Magneto-Resistance

[43] Ductile Bismuth Wire (pamphlet), Fitzpatrick Electric Supply Company, 444 Erwin Ave., Muskegon, Mich.

[44] G. Del Castille and R. W. Fast, Magnetoresistance of Copper-Plated Bismuth Fibers, J. Appl. Phys. 36, 1973 (1965).

[45] G. S. L. Hsu and J. E. Kunzler, Magnetoresistance Probe for Measuring Magnetic Field Intensity in a Small Space, Rev. Sci. Instr. 34, 287 (1963).

[46] C. G. Dols, Brief Discussion of the Use of Bismuth Resistors for Measuring Magnetic Flux Densities, UCID 413 Feb. 1955.

[47] H. B. Keller, Precision Measurements of Magnetic Induction with Bismuth Wire, University of California Radiation Laboratory Report UCRL-2249, June 1953.

[48] P. G. Watson et al., Temperature-Regulated Bismuth Resistor for Magnetic-Field Measurements, Rev. Sci. Instr. 29, 349 (1958).

[49] A. B. Kaufman, Magnetic Phenomenon, Radio Electronics, Nov. 1951.

Search Coil and Integrator

[50] C. G. Dols, Search Coil Parameters, UCID 1602 Jan. 1958.

[51] L. J. Laslett, Some Aspects of Search Coil Design, Brookhaven Nat'l. Lab., Associated Universities, Inc., Upton, Long Island, New York, June 1954.

[52] M. W. Garrett, Axially Symmetric Systems for Generating and Measuring Magnetic Fields, Part I, J. Appl. Phys. 22, 1091 (1951).

[53] M. W. Garrett, Axially Symmetric Magnetic Systems, Part II, (unpublished work).

[54] W. C. Elmore and M. W. Garrett, Measurement of Two-Dimensional Fields, Part I: Theory, Rev. Sci. Instr. 25, 480 (1954).

[55] I. E. Dayton et al., Measurement of Two-Dimensional Fields, Part II: Study of a Quadrupole Magnet, Rev. Sci. Instr. 25, 485 (1954).

[56] W. F. Brown, Jr. and J. H. Sweer, A Test Coil for Point Measurement of Inhomogeneous Fields, Rev. Sci. Instr. 16, 276 (1945).

[57] R. F. K. Herzog and O. Tischler, Measurement of Inhomogeneous Magnetic Fields, Rev. Sci. Instr. 24, 1001 (1953).

[58] D. A. Gray et al., The 7-GeV Proton Synchrotron Magnet; General Characteristics of Model AC 2, AERE A/R 2626, Nov. 1958.

[59] D. A. Gray et al., Measuring Apparatus and Methods Used During the Design and Commissioning of the Nimrod Magnet, NIRL/R/4, Jan. 1963.

[60] B. deRaad, Dynamic and Static Measurement of Strongly Inhomogeneous Magnetic Fields, Ph.D. Thesis, The Hague, 1958.

[61] W. H. Lamb, Jr., A Proposed Search Coil for Measuring the Harmonic Coefficients of Magnetic Quadrupole Fields, Argonne National Laboratory Report ANL-13, WHL-1, Jan. 1962.

[62] J. K. Cobb and J. J. Murray, Precision Magnetic Measurements Used for the Design of the Stanford 2-Mile Linear Accelerator Transport Systems, IEEE Trans. Nucl. Sci. NS-12, 139, Feb. 1965.

[63] S. Berglund et al., A Magnetic Probe for Plasma Measurements, J. Sci. Instr. 40, 250 (1963).

[64] R. E. Richardson and D. C. Sewell, A Device for Determining the Direction of Flux Lines in the Time-Varying Magnetic Field of a Particle Accelerator, Rev. Sci. Instr. 22, 697 (1951).

[65] D. A. Gray and A. H. Spurway, 7-GeV Proton Synchrotron Magnet: Apparatus for Measuring Field and Field Gradient in Magnet Models, AERE A/R 2538, Aug. 1958.

Miscellaneous

[66] I. M. Beskrovnyi et al., A Unit that Measures the Gradient of a Magnetic Field, Izv. Akad. Nauk SSR, Ser. Fiz. 26, 1092 (1962).

[67] E. Wunderer, Measurements of Strength and Direction of Weak Magnetic Fields, Rev. Sci. Instr. 36, 1054 (1965).

[68] U. S. Shirchenko, Apparatus for Absolute and Relative Measurements of the Magnetic Field (Energy) in A. C. Operated Accelerators, Elektronnyi Uskoriteli, 220-1, 1961.

[69] P. H. Serson, An Electrical Recording Magnetometer, Can. J. Phys. 35, 1387 (1957).

[70] R. D. Medford, W. H. W. Fletcher, et al., A New Application of the Faraday Magneto-Optical Effect for Diagnostic Measurements of Transient Magnetic Fields, Nature 192, 622 (1961).

[71] P. Grivet, High Magnetic Fields, (M. I. T. Press and John Wiley & Sons, Inc., New York, (1962).

[72] P. G. Watson, Brief Description of Operation and Performance Specifications of the LRL Rapid Magnetic Field Mapping System, UCRL Magnet Testing Group Note UCID-1951, Aug. 1963.

Figure Legends

Fig. 1. RC integrator.

Fig. 2. Miller integrator.

Fig. 3. Zip-Track system. (The asterisk indicates optional items.)

Fig. 4. Zip-Track data.

Fig. 5. Rapid-Mapper system.

Fig. 6. Rapid-Mapper positioning equipment.

Fig. 7. Rapid-Mapper console.

Fig. 8. Equivalent Miller-integrator circuit.

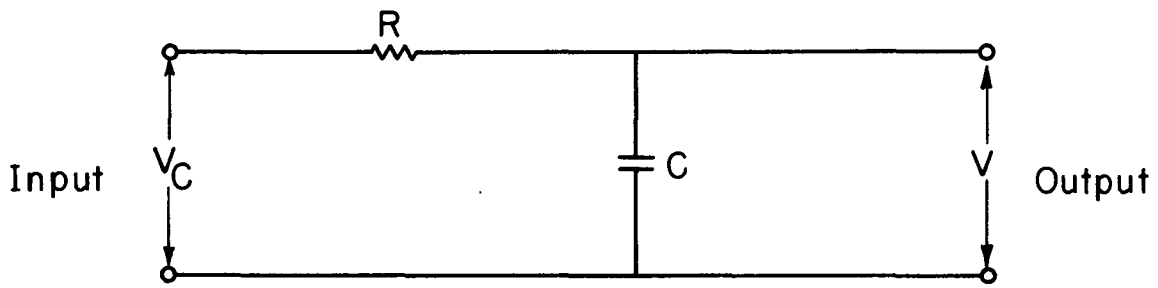

MUB-7613

Fig. 1

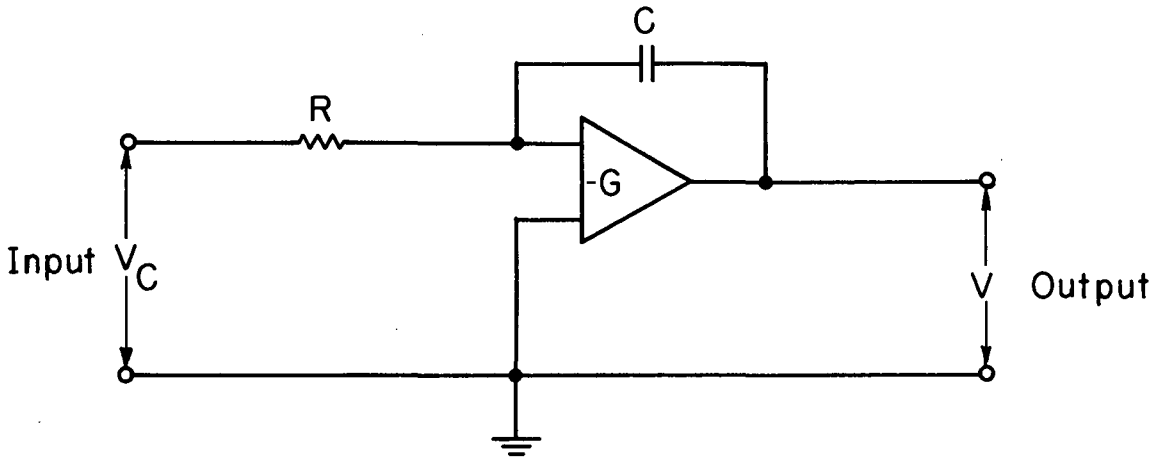

MUB-7614

Fig. 2

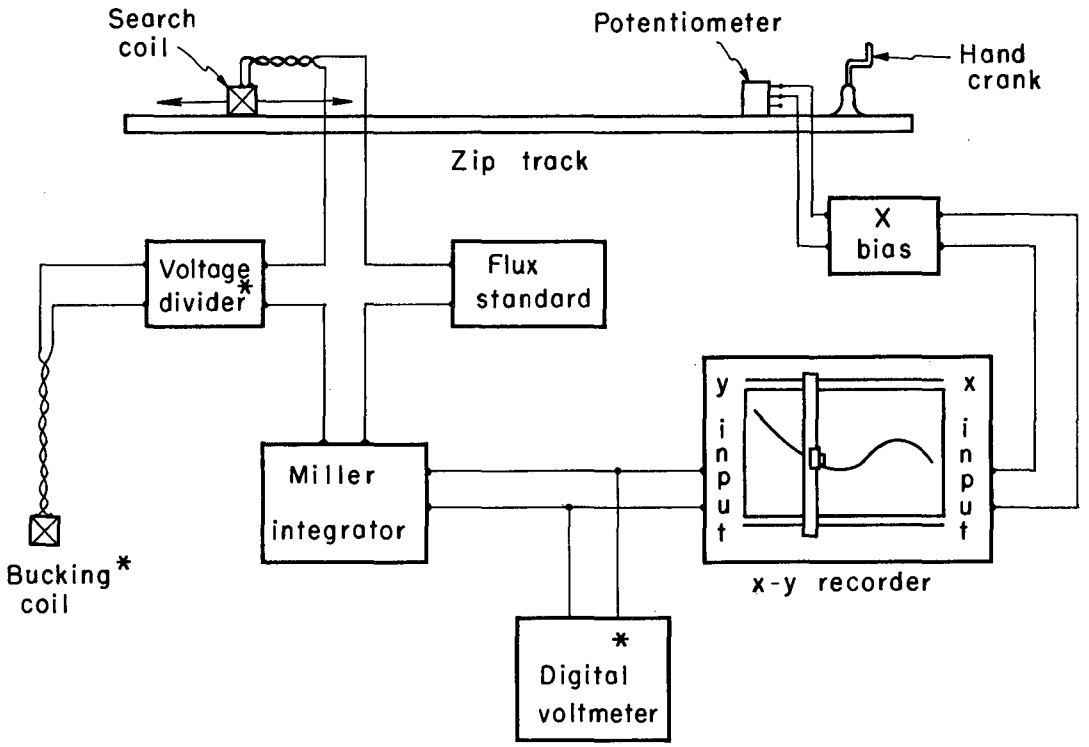

MUB-7615

Fig. 3

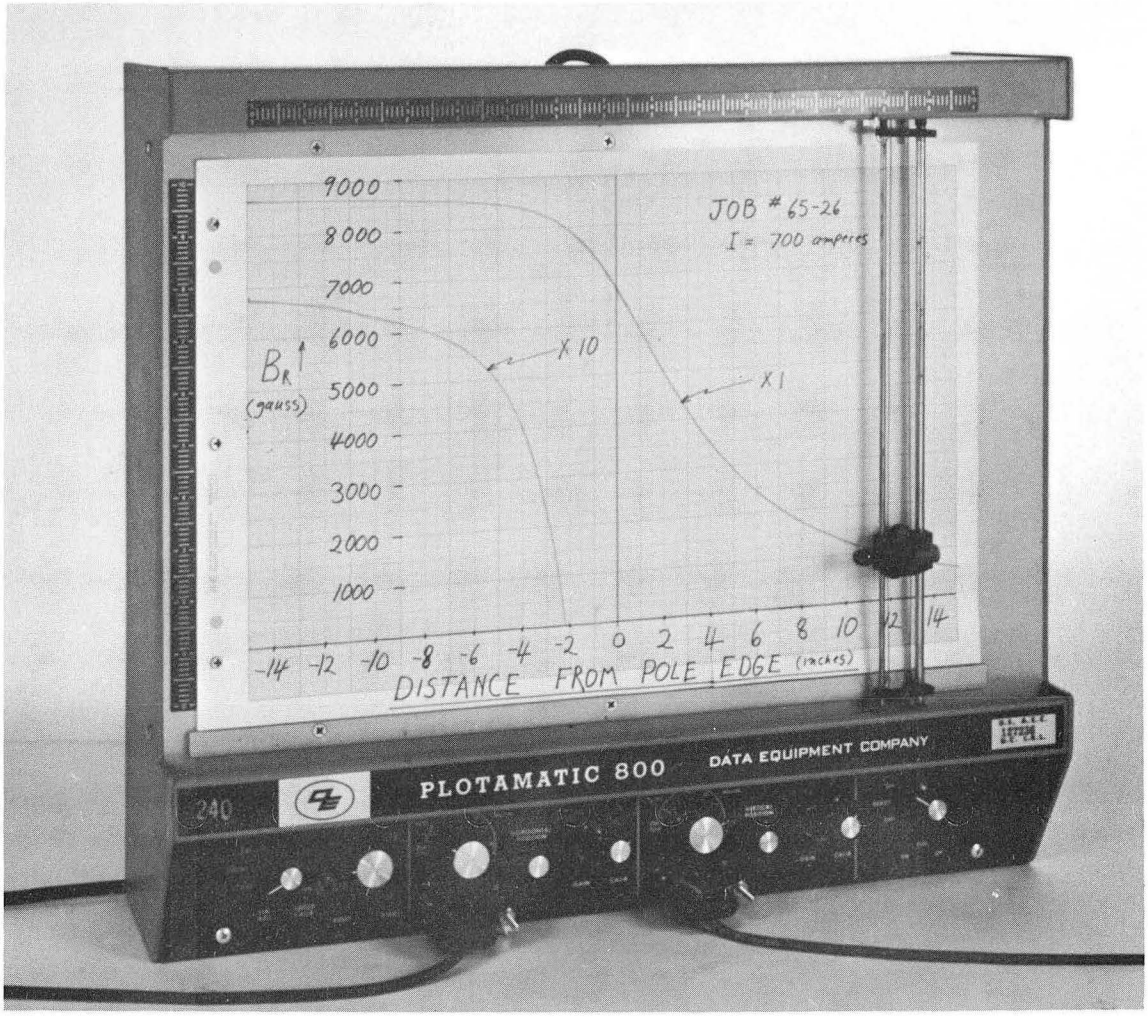
JOB # 65-26
I = 700 amperes
9000
8000
7000
6000
5000
4000
3000
2000
1000
B_R
(gauss)
X 10
X 1
-14 -12 -10 -8 -6 -4 -2 0 2 4 6 8 10 12 14
DISTANCE FROM POLE EDGE (inches)
PLOTAMATIC 800
DATA EQUIPMENT COMPANY
240

ZN-5160

Fig. 4

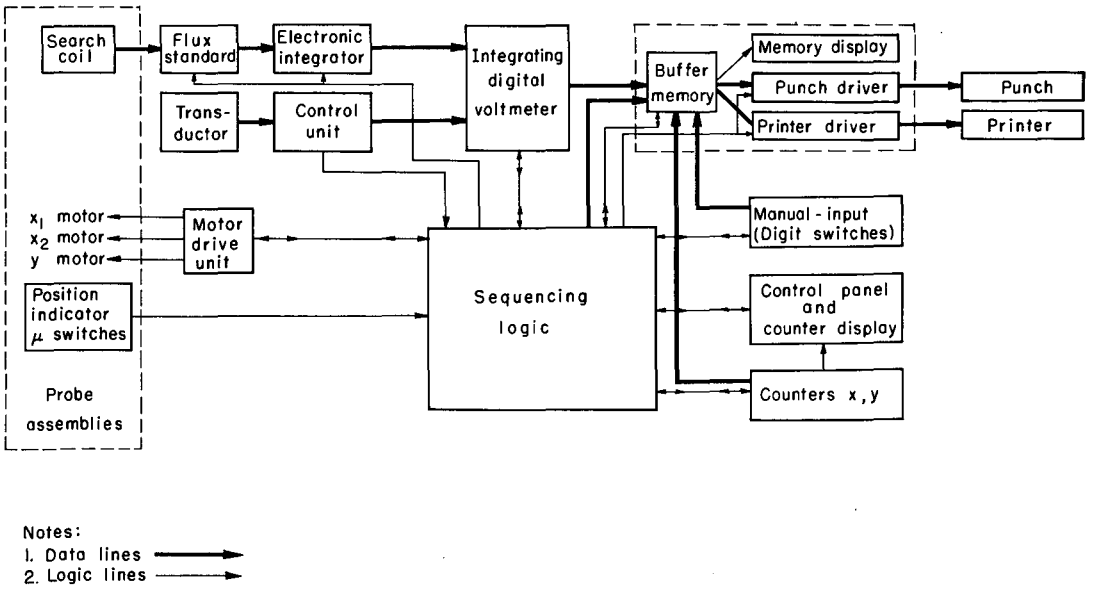
Search coil
Flux standard
Electronic integrator
Integrating digital voltmeter
Buffer memory
Memory display
Punch driver
Printer driver
Punch
Printer
Trans-ductor
Control unit
x_1 motor
x_2 motor
y motor
Motor drive unit
Manual - input (Digit switches)
Position indicator μ switches
Sequencing logic
Control panel and counter display
Counters x, y
Probe assemblies
Notes:
1. Data lines
2. Logic lines
MUB-7616

Fig. 5

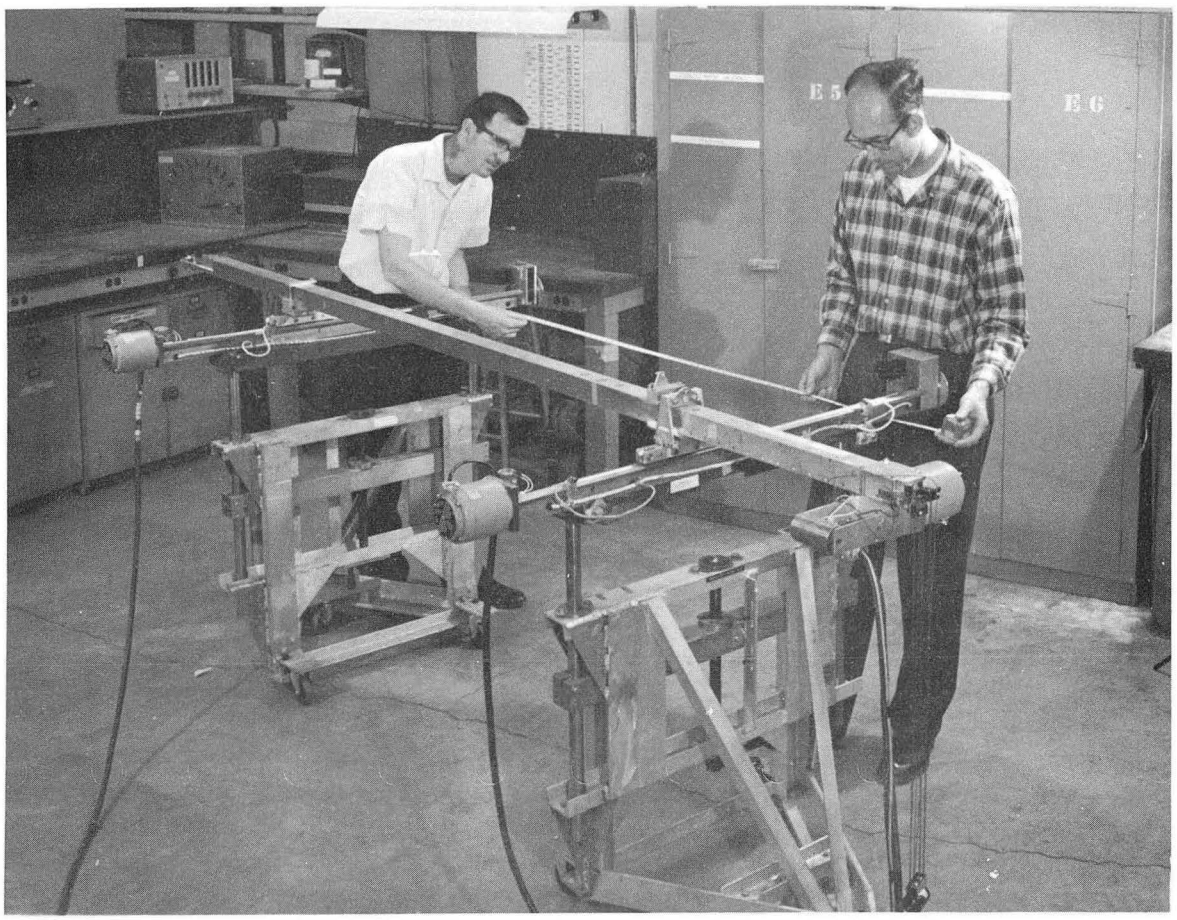

ZN-5161

Fig. 6

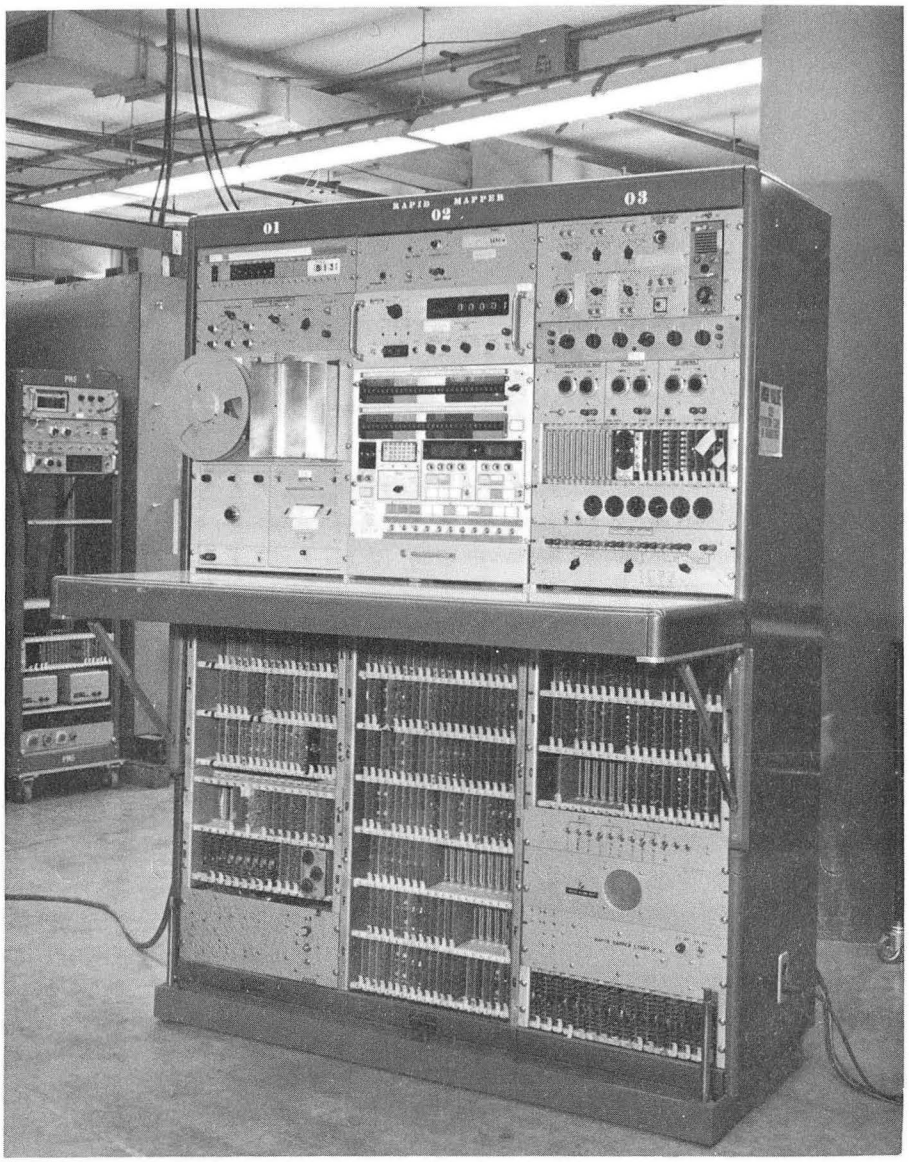

ZN-5162

Fig. 7

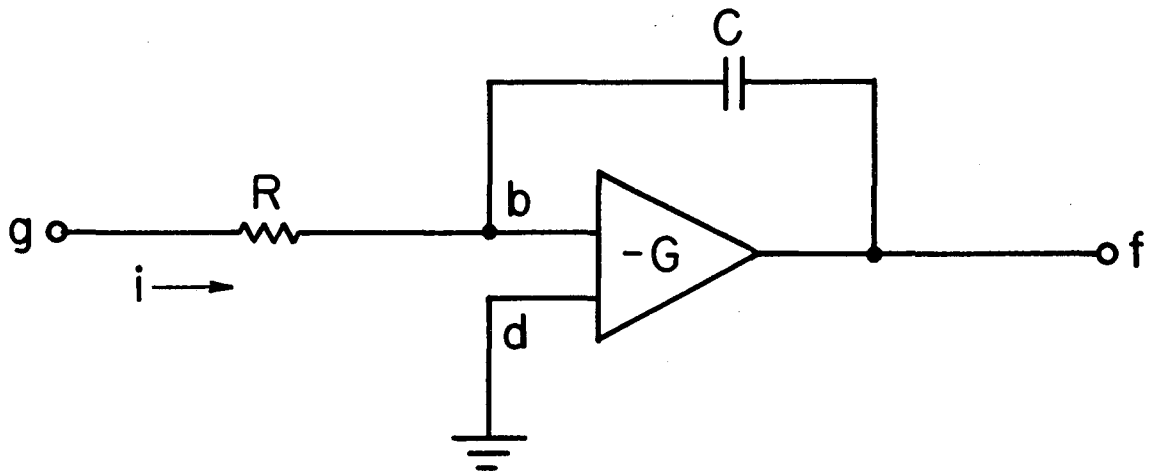

MUB-7617

Fig. 8

This report was prepared as an account of Government sponsored work. Neither the United States, nor the Commission, nor any person acting on behalf of the Commission:

A. Makes any warranty or representation, expressed or implied, with respect to the accuracy, completeness, or usefulness of the information contained in this report, or that the use of any information, apparatus, method, or process disclosed in this report may not infringe privately owned rights; or

B. Assumes any liabilities with respect to the use of, or for damages resulting from the use of any information, apparatus, method, or process disclosed in this report.

As used in the above, "person acting on behalf of the Commission" includes any employee or contractor of the Commission, or employee of such contractor, to the extent that such employee or contractor of the Commission, or employee of such contractor prepares, disseminates, or provides access to, any information pursuant to his employment or contract with the Commission, or his employment with such contractor.