UCRL-16381

University of California

Ernest O. Lawrence Radiation Laboratory

SURFACE CHEMICAL KINETICS IN THE GERMANIUM-IODINE REACTION

TWO-WEEK LOAN COPY

This is a Library Circulating Copy
which may be borrowed for two weeks.
For a personal retention copy, call
Tech. Info. Division, Ext. 5545

Berkeley, California

DISCLAIMER

This document was prepared as an account of work sponsored by the United States Government. While this document is believed to contain correct information, neither the United States Government nor any agency thereof, nor the Regents of the University of California, nor any of their employees, makes any warranty, express or implied, or assumes any legal responsibility for the accuracy, completeness, or usefulness of any information, apparatus, product, or process disclosed, or represents that its use would not infringe privately owned rights. Reference herein to any specific commercial product, process, or service by its trade name, trademark, manufacturer, or otherwise, does not necessarily constitute or imply its endorsement, recommendation, or favoring by the United States Government or any agency thereof, or the Regents of the University of California. The views and opinions of authors expressed herein do not necessarily state or reflect those of the United States Government or any agency thereof or the Regents of the University of California.

Submitted to the Journal of
Chemical Engineering

UCRL-16381

UNIVERSITY OF CALIFORNIA
Lawrence Radiation Laboratory
Berkeley, California

AEC Contract W-7405-eng-48

SURFACE CHEMICAL KINETICS IN THE GERMANIUM-IODINE REACTION

Donald R. Olander

September 1965

SURFACE CHEMICAL KINETICS IN THE GERMANIUM-IODINE REACTION

Donald R. Olander

Inorganic Materials Research Division
Lawrence Radiation Laboratory and the
Department of Nuclear Engineering, College of Engineering
University of California, Berkeley, California

ABSTRACT

The reaction of gaseous iodine and a rotating disk of germanium has been studied in the temperature range 280 to 460°C. A clear demarcation between reaction-limited and diffusion-limited regions was observed at 360°C. In the diffusion-limited region above 360°C, the rate was independent of temperature. In the reaction-limited region, processes with activation energies of 31 and 215 kcal/mol were observed. These were attributed to iodine reaction with grain boundary and crystal surface germanium, respectively.

INTRODUCTION

High temperature reactions in which a gas and a solid react to form gaseous reaction products have important practical applications. The reactions can usually be classed as one of the following:

$$A(g) + B(s) \rightarrow AB(g) \qquad (a)$$

$$AB(g) \rightarrow B(s) + A(g) \qquad (b)$$

$$AB(g) + C(g) \rightarrow B(s) + AC(g) \qquad (c)$$

An example of type (a) is the reaction of uranium tetrafluoride with fluorine to produce volatile uranium hexafloride. This reaction is a basic step in the preparation of uranium for isotopic separation in the gaseous diffusion plant.[3] The oxidation of the refractory metals, which are used in gas-cooled reactors and in aircraft engines also are in class (a). Molybdenum, tungsten, tantalum and niobium all form oxides with melting or boiling points below the melting point of the parent metal. At temperatures where the oxide is volatile, no protective coating of the metal substrate is present to prevent catastrophic corrosion.[11]

Many of the familiar vapor deposition processes are based on reactions of type (b): the deposition of titanium from the tetraiodide with the release of iodine gas; the deposition of iron from iron carbonyl;[2] the deposition of pyrolytic graphite by thermal decomposition of hydrocarbons or CCl_4.[8]

Some of the recently developed techniques of coating refractory metals on nuclear fuel particles or structural members utilize reactions to type (c). A tungsten coating process utilizing hydrogen reduction of WF_6 has been reported by Heestand et al.[4] The transport of ZnS by HCl gas has been investigated by Jona and Mandel.[5]

Combination of reactions (a) and (b) are used to grow large germanium single crystals.[6] At the hot end of a sealed tube, raw germanium is vaporized by reaction with gaseous GeI_4 to produce GeI_2, which then diffuses to the cold end of the tube and deposits germanium by decomposition reaction (b). The transport rate in the iodine system could be adequately described by a pure molecular diffusion model, but when bromine was substituted for iodine, some evidence of a surface kinetic restriction was noted.[6]

The germanium-iodine system was chosen for this study for several reasons. The iodides of germanium are volatile at reasonably low temperatures (200-300°C), thus facilitating the design of the apparatus. Neither the reactants nor products are particularly corrosive, eliminating the need for special materials of construction and elaborate safety precautions. The reactants can be obtained in high purity in the desired form and the thermodynamics and important species involved are known.

Thermodynamics of the Ge-I_2 System

This system has been studied thermodynamically by Lever,[7] whose results we quote here. In our experiments, the overall reaction is

$$2I_2(g) + Ge(s) = GeI_4(g) \qquad (1)$$

The equilibrium constant for reaction (1) is 1.6×10^{11} at 550°K and 1.0×10^{7} at 750°K. The reaction can be considered irreversible. The diiodide is the other species of interest. The equilibrium constant for the reaction:

$$GeI_4(g) = GeI_2(g) + I_2(g) \qquad (2)$$

is 1.1×10^{-8} at 550°K and 1.3×10^{-4} at 750°K. Thus the diiodide is nearly

completely converted to the tetraiodide in the presence of even small concentrations of iodine, and the only two species which need to be considered in the gas phase are GeI_4 and I_2.

Flow Geometry

The basic experimental and theoretical problem is the measurement of the chemical kinetic contribution in a system in which both surface reaction and gas phase diffusion are significant. Since the diffusional resistance on a rotating disk can be theoretically calculated, the surface chemical kinetics can be extracted from overall rate data. The important feature of the rotating disk system is the independence of the concentration profile on radial position which insures that the reaction rate will be uniform over the surface of the disk. This would not be the case with flow over a flat plate, for example, in which the reaction rate would decrease with distance from the leading edge.

The rotating disk also has the experimental advantage that it does not require pumping large quantities of high velocity hot gases over a surface in order to attain reasonably low diffusional resistances. The gas need only be fed rapidly enough to prevent accumulation of reaction product in the gas contacting the surface; the boundary layer is created by movement of the surface, not the gas. Moreover, even a modest rotational speed is sufficient to generate a thin hydrodynamic boundary layer. The thickness of the flow boundary layer on a rotating disk is:[10]

$$\delta \approx 3.5 \left(\frac{\nu}{\Omega}\right)^{1/2} \qquad (3)$$

while that for a flat plate is:

$$\delta = 4.64 \left(\frac{\nu}{U/x}\right)^{1/2} \qquad (4)$$

(U = mainstream velocity, x = distance from leading edge).

The boundary layer thickness on a disk rotating at 1000 rpm is equal to that 1 cm from the leading edge of a flat plate over which a gas at 180 cm/sec flows.

Description of Experiment

The rotating disk assembly is shown in Fig. 1. The disk was housed in a stainless steel container 2" in diameter and 4" in height, supplied with gas inlet and outlet tubes and a thermocouple for measurement of the gas temperature near the disk. The drive shaft for rotating the disk was a 1/4" diameter stainless steel tube terminated at the bottom by a graphite disk holder. A thermocouple penetrated the graphite and contacted the back side of the disk. The 99.9% intrinsic germanium was obtained from the Eagle Pitcher Company as 3/4" diameter disks 1/16 and 1/8 inches thick. The disks were set into a close fitting depression machined in the graphite and held in place by three small stainless steel strips bolted to the graphite disk holder. Approximately 1/32" of the disk edge protruded from the graphite surface. The exposed edge area amounted to about 15% of the disk surface area.

The contents of the disk chamber were sealed by a teflon O ring on the screw cap and a teflon rotating seal on the drive shaft. Because the seal could not be made completely gas tight at high temperatures and high rotational speeds, some iodine leakage between the teflon seal and the drive shaft occurred.

To prevent the iodine vapor from attacking the ball bearing above the seal, space was provided for air circulation and dissipation of the iodine.

The shaft was driven by a 1/50 HP variable speed motor which turned an aluminum drive wheel attached directly above the ball bearing. With this arrangement, speeds up to 2500 RPM at temperatures as high as 460°C in an iodine atmosphere were attained.

The leads from the disk surface thermocouple were electrically insulated from the assembly by a wood tube pressed over the drive shaft. The leads were attached to aluminum rings pressed on the outside of the wood tube. The thermoelectric EMF was taken from the aluminum rings during disk rotation by means of flexible brass strips. The cold junction temperature was measured by holding a thermometer as near to the aluminum rings as possible while the system was at operating temperature.

Adequate heating of the chamber was achieved by winding heating tapes around the side and bottom of the container. The top screw cap could not be heated because the teflon seal stuck unless the top was kept relatively cool (teflon can be safely used up to about 300°C). As a result, a temperature gradient from the bottom to the top of the chamber existed. Typically, the gas thermocouple was 20-30°C hotter than the disk surface thermocouple, even though the two were only 1/2 inch apart. This was not due to a temperature drop in the disk, since the same behavior was noted when no disk was in the holder. The surface temperature was taken to be that recorded by the rotating thermocouple, since the thin disk offered little resistance to heat conduction (the thermal conductivity of germanium is approximately equal to that of stainless steel at the temperatures involved).

Iodine flow rates ranged from 100 to 600 cc(STP)/min. To obtain a variation of the iodine concentration in the feed gas, a measured flow rate of argon was mixed with the iodine prior to introduction into the

disk chamber. At these small flow rates, up to 1/3 of all of the iodine fed to the chamber reacted to form GeI_4. If the reactants and products in the chamber were well-mixed, the concentration of the iodine in the chamber would have been approximately 30% less than the concentration of the feed gas. Such mixing occurs naturally in the rotating disk system, since the disk acts as a centrifugal pump, drawing gas in axially and spinning it out radially from the edge. If the velocity of the gas pumped through the chamber is not maintained at a value greater than the required approach velocity to the disk, some of the iodine depleted gas spun off the disk will recirculate to the bottom of the chamber and mix with the incoming feed. To avoid this situation, the flow guide shown in Fig. 1 (a sheet of stainless steel with a 3/4" central hole) was inserted approximately 1/8" below the disk surface. Its purpose was to insure that all of the fresh feed gas was directed at the disk, and to prevent return of depleted gas to the bottom of the chamber. Measured reaction rates were increased as a result of inserting the flow guide, indicating that some back mixing had been occurring. The flow guide does not appreciably affect the flow in the boundary layer, since it was placed many boundary layer thicknesses away from the disk surface.

The required total gas flow rate to the chamber can be obtained from the natural approach velocity to the disk, which is:[10]

$$w(\infty) = -0.886\sqrt{\nu\Omega} \tag{5}$$

The flow rate (STP) required to equal or exceed the value required by Eq. (5) in a 3/4" diameter orifice is:

$$Q_{tot} \geq 150\left(\frac{298}{T}\right)\sqrt{\nu\Omega} \tag{6}$$

For example, if argon is the main constituent of the gas, $\mu = 0.5\ cm^2/sec$ at 690°K. At a disk speed of 1000 RPM, the total flow must be $\geq$ 450 cc (STP)/min. In pure iodine ($\nu = 0.065\ cm^2/sec$ at 690°K), the required flow rate is 230 cc(STP)/min. Equation (6) was always considered in adjusting the flow rates for each experiment.

The only reliable method of obtaining a feed gas of known iodine concentration in argon was to meter the two pure gases prior to mixing. Iodine, however, must be kept hotter than 183°C, its boiling point, and no commercial rotameter unit is capable of operation at this temperature. The rotamer assembly shown in Fig. 2 was constructed for this purpose. It consisted of a stainless steel tube with two viewing slots cut into the sides 180° apart. The bottom screw fitting, to which the inlet tube was welded, supported the pyrex rotameter tube on a teflon O ring. A screw cap on the top pressed down on the top plug fitted with another teflon O ring. A commercial rotameter tube (Fischer-Porter Co.) was inserted and the top screw cap tightened. A thermocouple inserted in the bottom of the unit served as a bottom float stop and gas temperature indicator. The unit was wrapped in heating tape (except for the viewing windows) and inserted in the flow system with Swagelok fittings. A piece of glass tubing was inserted between the rotameter tube and the steel housing to prevent cooling of the rotameter by ambient air currents. Even though the assembly was pressure tight at room temperature, thermal expansion of the steel tube at high temperatures was sufficient of cause leakage around the teflon O rings. It was found necessary to provide a final tightening of the screw cap while the unit was at operating temperature. A high intensity lamp was placed behind one of the windows to permit viewing of the float when the tube was filled with iodine. The unit had

a range of 100-600 cc(STP)/min, and was calibrated at 230°C by condensing the effluent iodine in a test tube and weighing. The precision of the calibration was ±5%, and agreed with the calibration based upon the manufacturer's instructions to within 10%, despite the fact that the temperature was far greater than recommended.

The flow system is shown in Fig. 3. Iodine vapor was produced in a boiler constructed of a flanged stainless steel tank. One pound of iodine was sufficient for about 10 experiments. Flow control was achieved by a regulating valve between the boiler and the rotameter. All lines were 1/4" stainless steel tubing and Swagelok fittings were used for all tees, elbows, etc. The boiler was heated by a small resistance furnace and the lines were wrapped with heating tape. The tape on the disk chamber could be controlled independently of the line tapes. The valves were provided with Graphitar packing glands for high temperature operation.

The total pressure in the disk chamber was one atm. for all experiments.

Experimental Procedure

The entire drive mechanism, thermocouple, and the screw cap were removed from the disk chamber and a weighed disk of germanium placed in the graphite holder. The cap was screwed on to the chamber and the heating tapes and the boiler furnace turned on. The drive motor was turned on and set to the desired speed, which was checked periodically during the experiment with a strobotac. After about an hour, the disk chamber had attained the desired temperature and the boiler had built up approximately 8 psig iodine pressure (steady iodine flow could only be maintained with some overpressure in the boiler). The iodine flow rate

was adjusted to the desired value. During this period, the lower valve on the right in Fig. 3 was closed, and the upper one opened, so that no iodine flowed to the disk chamber. The desired argon flow was continually admitted to the disk chamber during the heat-up period. When the iodine and argon flow rates, the disk speed, and the disk temperature were all steady, the experiment was begun by closing the upper right hand valve in Fig. 3 and opening the one beneath it. Mixing to the two gas streams took place just underneath the lower valve.

After a fixed period of time (100 sec to 50 min), the iodine flow was switched from the disk chamber by the valves and the disk chamber rapidly flushed with argon. During the period of the experiment, the disk temperature increased because of the heat of the reaction. At high temperatures, the increase was as much as 20°C. At lower temperatures, where the reaction rates were smaller, the temperature was constant to within 2°C. The temperature rise during the experiment could be reduced somewhat by turning down the disk chamber heating tapes just before the run was started and allowing the heat of reaction to maintain the disk surface temperature.

By an hour after the run, the disk assembly was cool enough to be removed. The disk was rinsed in acetone and weighed. If the disk has not undergone a large amount of reaction, it was used again after polishing with emery cloth and crocus cloth. A new disk was used when sufficient germanium had been lost to cause the disk surface to be flush with the graphite holder. Experiments in which the original disk surface was level with or below the graphite surface gave abnormally low rates (at least in the diffusion controlled region).

For a fixed set of conditions, the weight loss of the disk was

proportional to the time of exposure to iodine. The rate of removal was independent of time; neither an induction period characterized by a low rate nor a rapid initial rate followed by a levelling off was observed.

Results

In this paper, we will discuss primarily those data which illustrate the surface kinetic aspects of the overall reaction. The diffusion controlled regime will be considered in detail in the following paper.

Since the surface reaction is irreversible, we assume that the rate of germanium loss per unit area of disk can be written as:

$$r = k_{app} C_0^n \tag{7}$$

where n is the apparent order of the reaction with respect to gaseous iodine and k_{app} is the apparent rate constant for the reaction between gaseous iodine and the elemental germanium.

Figure 4 shows the rate of germanium removal at a disk speed of 900 RPM, an inlet iodine mole fraction of 0.126 (argon diluent) and temperatures from 280 to 460°C.*

At temperatures greater than 360°C, the rate is independent of temperature. The average of the four experiments at 368, 404, 418, and 440°C is m=0.575±0.022 mg/sec. (The two experiments at 457 and 459°C will be discussed later).

At temperatures below 360°C, the overall rate becomes increasingly subject to restriction by the surface kinetics. An interesting feature of the temperature dependence of the rate is the very sharp knee between the diffusion and reaction controlled regions.

---

* The rates are plotted in mg of Ge/sec, which, when divided by $M_{Ge}A_{disk}X10^3 = 2.08X10^5$ gives r of Eq. (7).

Figure 5 shows the effect of bulk iodine concentration on the overall rate at 324°C (in the reaction controlled region) and at 415°C (in the diffusion controlled region). The disk speed was 900 RPM and the iodine mole fraction in the feed gas was varied from 0.048 to 0.218. The slope of the line through the points at 415°C is 4.78±0.15 mg/sec-mole fraction I_2.

All of the data for temperatures above 360°C represent complete control of the reaction by diffusion of iodine gas through the boundary layer on the rotating disk. The concentration of gaseous iodine at the disk surface is zero. The evidence for this conclusion is as follows:

1. The observed rate is temperature independent above 360°C. The theoretical development presented in the following paper predicts a variation as $T^{-0.1}$, which is less than the precision of the rate measurements for temperatures from 360-440°C.

2. At 415°C, the rate is proportional to the bulk iodine concentration in the dilute gas region up to an iodine mole fraction of 0.218. This is expected on theoretical grounds, provided that the gas phase is sufficiently dilute so that the effects of multicomponent diffusion, variable properties and interfacial velocity are negligible (or compensating).

3. The dashed lines in Figs. 4 and 5 represent theoretical predictions based upon the transport by diffusion-convection of iodine through argon to a zero concentration of iodine at the disk surface. These predictions, which will be discussed in the following paper, are within 15% of the observed rates.

In order to obtain the rate constant and order of the reaction from the data below 360°C, the concentration of gaseous iodine at the disk

surface must be known. In the diffusion limited regime, the rate is proportional to the bulk iodine concentration, since the surface concentration is zero:

$$m_{DL} \propto x_{\infty} \tag{8}$$

In the reaction limited region, the rate of the surface reaction is equal to the rate of diffusion of iodine to the surface. The latter is proportional to the difference between the bulk and surface concentrations:

$$m \propto (x_{\infty}-x_0) \tag{9}$$

Since it has been shown that the diffusion limited rate is independent of temperature, the constants of proportionality in Eqs. (8) and (9) are equal and temperature independent. Even at temperatures below 360°C, m_{DL} can be interpreted as the rate which would have prevailed if the surface kinetics were very rapid. The concentration of gaseous iodine at the disk surface can be obtained from Eqs. (8) and (9) as:

$$x_0 = x_{\infty}(1-m/m_{DL}) \tag{10}$$

It is clear from the lower curve of Fig. 5, which represents experiments at 324±2°C, that the surface rate varies with the iodine concentration to some power less than unity. The surface iodine concentration is obtained from the known bulk iodine concentration by Eq. (10), The ratio m/m_{DL} is obtained by dividing the measured rate at a particular x_{∞} by the diffusion limited rate given by the ordinate of the upper solid line at the same iodine feed concentration. The data are replotted in Fig. 6 as a function of x_0. The line drawn through these points has a slope of 1/2.

With n=1/2 and $C_0=px_0/RT$, Eq. (7) can be solved for k_{app}:

$$k_{app} = \frac{m \times 10^{-3}}{M_{Ge} A_{disk}} \left(\frac{RT}{Px_0}\right)^{1/2} \qquad (11)$$

x_0 has been calculated from Eq. (10) with m_{DL} equal to 0.575. The data from Fig. 4 at temperatures below 360°C have been treated in this manner and the results shown on the Arrhenius plot in Fig. 7. The points at 280, 303, and 324°C fall on a single line with an activation energy of 31 kcal/mole. The experiments at 340, 348, and 353°C, however, lie distinctly above the extrapolated low temperature data. The effect is far beyond experimental error: the reproducibility of the experiments was on the order of 10%, while the points at 348 and 353°C are nearly 2-1/2 times what would be expected from the low temperature line. Since this behavior strongly suggests the existence of two surface mechanisms, the contribution of the high temperature (340-353°C) component has been deduced in a manner analogous to the "peeling" of a composite radioactive decay curve. The contribution of the process predominant at low temperatures (280-324°C) was subtracted from each of the points at 340, 348, and 353°C. The difference was then plotted as the solid points in Fig. 7, which are coonnected by the dashed line. This second process is found to be characterized by the rather large activation energy of ~215 kcal/mole. Because of the extreme sensitivity to temperature and the tendency of the disk temperature to rise during a run due to the heat of reaction, the activation energy quoted above is only a rough approximation. Nevertheless, it appears certain that a second process of very high activation energy does become important just before the diffusion limited region is reached. It is this process which is responsible for the very sharp knee in the curve of Fig. 4. Because of the strong temperature dependence, the second

process is experimentally accessible only in a narrow temperature band from 340-353°C. At temperatures greater than 353°C, the ratio m/m_{DL} is close to unity and the estimation of x_0 by Eq. (10) is very inaccurate (at 353°C, m/m_{DL} is 0.9). Below 340°C, the second process is slow compared to the process which predominates at low temperatures.

Visual examination of the disks after iodine attack provided a means of identification of the two processes indicated by the Arrhenius plot. The disks were sliced from a germanium rod, which consisted primarily of columnar grains about 1/8" wide extending from the edge towards the center. This structure was not evident in the as-received specimens, as can be seen from the photograph in Fig. 8a. Figure 8b shows a disk which had been used in the experiment at 280°C. The primary mode of attack appears to have been an etching of the grain boundaries. The crystal faces were practically unaffected, except for a cleansing type of attack which left some crystallites with a mirror-like finish after exposure.* Figure 8c shows the disk surface after exposure to iodine at 348°C, in the region where the high activation energy process predominates. Grain boundary attack is still evident, but the grayish coat on the remainder of the surface suggests that reaction on the crystal faces has occurred. Figure 8d shows the appearance of the disk after exposure at 415°C. The entire surface is coated with a black substance, and the crystal structure is difficult to see. The black film is adherent, insoluble in acetone, but was easily removed with one or two swipes of emery cloth. By contrast, the etching of the grain boundaries characteristic of the very low temperature runs was quite deep. A great deal of polishing was required to regain a smooth disk after a low temperature

*The dark patches on Fig. 8b are due to the different orientation of the crystal surfaces with respect to the lighting.

experiment (approximately 0.1 mm of surface had to be removed).

The presence of the black film did not act as an additional resistance to the reaction, as do most corrosion product scales. The weight loss was proportional to exposure time, and in the diffusion limited region, the rate could be predicted from a theory which considered the gas phase resistance only. The thickness of the film was not a function of the amount of germanium removed; it appeared to be an intermediate in the overall process which built up to steady state very quickly in an experiment.

There is one aspect of the data which is not in accord with the simple concept of a sharp demarcation between regions of reaction and diffusion control. In the temperature range 368-440°C, the average rate was 0.575±0.022 mg/sec. The two experiments at 457 and 459°C yielded an average rate of 0.72±0.06 mg/sec, despite the theoretical prediction of practically no temperature dependence in the diffusion controlled region. This prediction, however, assumed that the diffusing species were the same at all temperatures. The dashed lines in Figs. 4 and 5 were based upon the assumption that I_2 is the diffusing reactant and GeI_4 the sole product.

As the temperature is increased, however, the fraction of iodine as monatomic I increases according to the equilibrium:

$$\frac{1}{2} I_2(g) = I(g) \tag{20}$$

The fraction of iodine as the monatomic gas is given by:

$$\alpha_I^2 = (1+4x/K_I)^{-1/2} \tag{21}$$

where x is the mole fraction of total iodine (as I_2) and K_I is the equilibrium constant of reaction (20).[9] The values of K_I at 440°C and 460°C are 1.4×10^{-3} and 2.0×10^{-3} respectively. The degree of dissociation of I_2 is quite small except for the region where the iodine concentration approaches zero. Since in the diffusion controlled region, the iodine concentration is zero at the disk surface, the region, very close to the surface will in principle be all monatomic gas. This dissociation will not affect the diffusion rate as long as the region containing appreciable quantities of I is small compared to the thickness of the diffusion boundary layer. However, with increasing temperature, the region containing I will move further out from the disk. The effect of such a region would be to increase the iodine transfer rate, since the diffusivity of I in argon is undoubtedly greater than that of I_2.

In an analogous manner, the fraction of gaseous germanium present as the diiodide can be computed from the equilibrium constant of Eq. (2) as:

$$\alpha_{GeI_2} = (1+x/K_{GeI_2})^{-1} \qquad (22)$$

where x is the mole fraction of iodine and K_{GeI_2} is the equilibrium constant of reaction (2). The values of K_{GeI_2} at 440°C and 460°C are 3.0×10^{-5} and 6.5×10^{-5} respectively. The reacted germanium exists as GeI_2 only in a region very close to the disk surface, where the iodine concentration is nearly zero. As it diffuses out towards the bulk, GeI_2 rapidly picks up I_2 to form the tetraiodide, which constitutes the sole diffusing product from there to the bulk. However, as the temperature is increased, the fraction of germanium as the diiodide at a given iodine concentration

increases and the depth of the region required to complete the conversion of GeI_2 to GeI_4 becomes a larger fraction of the diffusion boundary layer thickness. This effect introduces a sink for I_2 within the gas phase boundary layer and tends to sharpen the concentration profile of iodine and hence increase its transfer rate. If GeI_2 had been the only stable gaseous germanium species, for example, the reaction rate would have been twice as fast as was observed and calculated for the present system, since each iodine molecule would have been able to remove one germanium atom instead of one half.

In sum, the observed increase in the rate at 460°C is probably due to the increasing amounts of I and GeI_2 in the gas phase near the disk surface. Although the region in which these species are present may be very thin compared to the diffusion boundary layer, it is located directly on the disk surface where the transport mechanism is nearly entirely molecular diffusion.

Discussion

On the basis of the sharp break in the Arrhenius plot and the visual appearance of the disk after attack at various temperatures, two distinct processes appear to be operating. At temperatures below about 340°C, iodine preferentially attacks the loosely bound germanium atoms in the grain boundaries and other crystal defects. The activation energy for this process is 31 kcal/mole. At temperatures above 340°C, the entire crystal surface is subject to attack by iodine. Because the lattice germanium atoms are more tightly bound than those in the grain boundaries, the activation energy for crystal attack is greater and has been estimated as 215 kcal/mole, which is more than twice the heat of sublimation of elemental Ge.

There are a number of plausible mechanisms which would adequately explain the data presented here. In the two which we consider here, the adsorption steps will be assumed to be in equilibrium, since the observed activation energies were large enough to suggest a surface reaction controlled mechanism. Because of the stability of GeI_2, we will also assume that its desorption from the surface is rapid and irreversible.

The first mechanism considered is equivalent to that proposed by Blackwood[1] for the reaction of hydrogen and graphite. Molecular iodine chemisorbs on a germanium site and produces GeI and an adjacent iodine atom. The iodine atom is presumed immobile and can react only with the GeI group with which it was formed. The rearrangement of this surface complex produces either GeI_2 or I_2, the latter by reversal of the adsorption reaction. The elementary reactions are:

$$Ge + I_2(g) \overset{K_a}{\rightleftarrows} (GeI)I \tag{23}$$

$$(GeI)I \overset{k_1}{\rightarrow} GeI_2 \uparrow \tag{24}$$

The fraction of the sites occupied by the (GeI)I complex is:

$$\theta = \frac{K_a p}{1+K_a p} \tag{25}$$

and the rate of GeI_2 formation is:

$$r = k_1\theta = \frac{k_1 K_a p}{1+K_a p} \tag{26}$$

Since the partial pressure of iodine is proportional to its surface mole fraction, and r is proportional to the rate of germanium weight loss, this mechanism predicts that x_0/m should be a linear function of x_0,

with the intercept equal to $1/k_1$ and the slope equal to $1/K_a k_1$. Such a plot is shown in Fig. 9.

In the second mechanism, I_2 is assumed to dissociate upon adsorption on a germanium site but to remain mobile thereafter. Successive irreversible reactions of surface I with Ge to form GeI and then with GeI to form the product follow.

$$I_2(g) \overset{K_a}{\rightleftarrows} 2I \tag{27}$$

$$I + Ge \overset{k_1}{\rightarrow} GeI \tag{28}$$

$$I + GeI \overset{k_2}{\rightarrow} GeI_2\uparrow \tag{29}$$

If θ_1 and θ_2 represent the fractions of the surface occupied by I and GeI respectively, the kinetic equations for stationary surface concentrations of these species are:

$$K_a p(1-\theta_1-\theta_2) = \theta_1^{\,2} \tag{30}$$

$$k_1\theta_1(1-\theta_1-\theta_2) = k_2\theta_1\theta_2 \tag{31}$$

Solving Eqs. (30) and (31) for θ_1 yields:

$$\theta_1 = \frac{1}{2}\,\frac{K_a p}{1+k_1/k_2}\left\{\left[1 + 4\left(\frac{1+k_1/k_2}{K_a p}\right)\right]^{1/2} - 1\right\} \tag{32}$$

In the limit as $(1+k_1/k_2)/K_a p \gg 1$, Eq. (32) becomes:

$$\theta_1 = \left(\frac{K_a p}{1+k_1/k_2}\right)^{1/2} \tag{33}$$

and

$$\theta_2 = 1/(1+k_2/k_1) \tag{34}$$

and

$$r = k_2\theta_1\theta_2 = \left(\frac{k_2}{1+k_2/k_1}\right)\left(\frac{K_a}{1+k_1/k_2}\right)^{1/2}\sqrt{p} \tag{35}$$

Equation (35) suggests that the rate should vary as the square root of the surface iodine mole fraction. This prediction is compared to the data in Fig. 6.

The data provide no basis for choosing either of these mechanisms; both Figs. 6 and 9 reproduce the observed variation of rate with surface concentration equally well.

These mechanisms are strictly applicable only to the grain boundary process (31 kcal/mole activation energy), since variation of the rate with iodine concentration was measured only at 324°C. However, the same mechanism would be expected to apply to the crystal surface reaction, except that the adsorption equilibrium and surface reaction rate constants would have different values.

According to these mechanisms, the black film on the surface is the complex (GeI)I in mechanism 1 or GeI in mechanism 2. The film could not be either the stable species GeI_2 or GeI_4, since these two are volatile at the experimental temperatures, while the black film remained on the surface even at temperatures as high as 460°C in an atmosphere of pure argon. This tenacity suggests that the film was formed irreversibly, as in Eq. (28). Moreover, GeI_2 and GeI_4 are both yellow, whereas the film was definitely black.

Acknowledgments

This work was supported by the United States Atomic Energy Commission.

NOTATIONS

A_{disk}	area of disk surface, cm^2
C_0	concentration of gaseous iodine at disk surface, moles/cc
k_{app}	apparent reaction rate constant, gm atoms Ge/cm^2 - sec - $(moles/cc)^n$
k_1, k_2	rate constants for elementary surface reaction, gm atoms Ge/cm^2 - sec
K_a	adsorption equilibrium constant for iodine on germanium, atm
K_I	Equilibrium constant for reaction (20), $atm^{1/2}$
K_{GeI_2}	Equilibrium constant for reaction (2), atm
m	rate of removal of disk, mg Ge/sec
m_{DL}	rate of removal of disk under diffusion limited conditions, mg Ge/sec
M_{Ge}	molecular weight of germanium
n	apparent order of reaction
p	iodine partial pressure at disk surface, atm
P	total pressure, atm
Q_{tot}	total gas flow rate, cc (STP)/min
r	reaction rate, gm atoms Ge/cm^2 - sec
R	gas constant, cc-atm/mole-°K
T	temperature, °K
$w(\infty)$	approach velocity to a rotating disk, cm/sec
x	iodine mole fraction in gas phase boundary layer
x_∞	iodine mole fraction in feed gas
x_0	iodine mole fraction at disk surface

NOTATIONS (continued)

Greek Letters

α_I	fraction of total iodine as monotomic species
α_{GeI_2}	fraction of total gaseous germanium as GeI_2
δ	flow boundary layer thickness, cm
Ω	rotational speed of disk, radians/sec
ν	kinematic viscosity of gas, cm^2/sec
θ	fraction of active sites occupied by a surface species

REFERENCES

1. Blackwood, J.D., Australian J. Chem. 15, 297, (1962).
2. Carlton, H.E. and Oxley, J. H., AIChE J., 11, 79 (1965).
3. Harrington, C.D., and Ruehl, A.E., "Uranium Production Technology", D. Van Nostrand, Princeton (1959).
4. Heestand, R.L., Federer, J.I., and Leitten, C.F.,Jr., ORNL-3662 (1964).
5. Jona, F. and Mandel, G., J. Chem. Phys. 38, 346 (1963).
6. Jona, F., J. Chem. Phys. 42, 1025 (1965).
7. Lever, R.F., J. Electrochem. Soc. 110, 725 (1963).
8. Powell, C.F., Campbell, I.E., and Gonser, B.W., BMI R-137 (1949).
9. Rossini, F.D., et al, "Selected Values of Thermochemical Properties", Ser III, National Bureau of Standards.
10. Schlichting, H., "Boundary Layer Theory", p. 83, Fourth Ed., McGraw-Hill, New York (1960).
11. Schryer, D.R., and Modisette, Planetary and Space Sci. 3, 31 (1961).

FIGURE CAPTIONS

Fig.1. Rotating disk assembly and chamber.

Fig.2. Iodine rotameter.

Fig.3. Overall view of apparatus.

Fig.4. Effect of temperature on the rate of germanium loss. disk speed = 900 RPM. Inlet iodine mole fraction = 0.126.

Fig.5. Effect of inlet iodine mole fraction on the reaction rate at 324 and 415° C. Disk speed = 900 RPM.

Fig.6. Variation of rate with surface iodine concentration at 324°C.

Fig.7. Apparent rate constant as a function of temperature.

Fig.8. Disk surfaces: (a) as received; (b) after 324°C experiment; (c) after 348°C experiment; (d) after 415°C experiment.

Fig.9. Variation of reaction rate with surface iodine mole fraction according to mechanism 1.

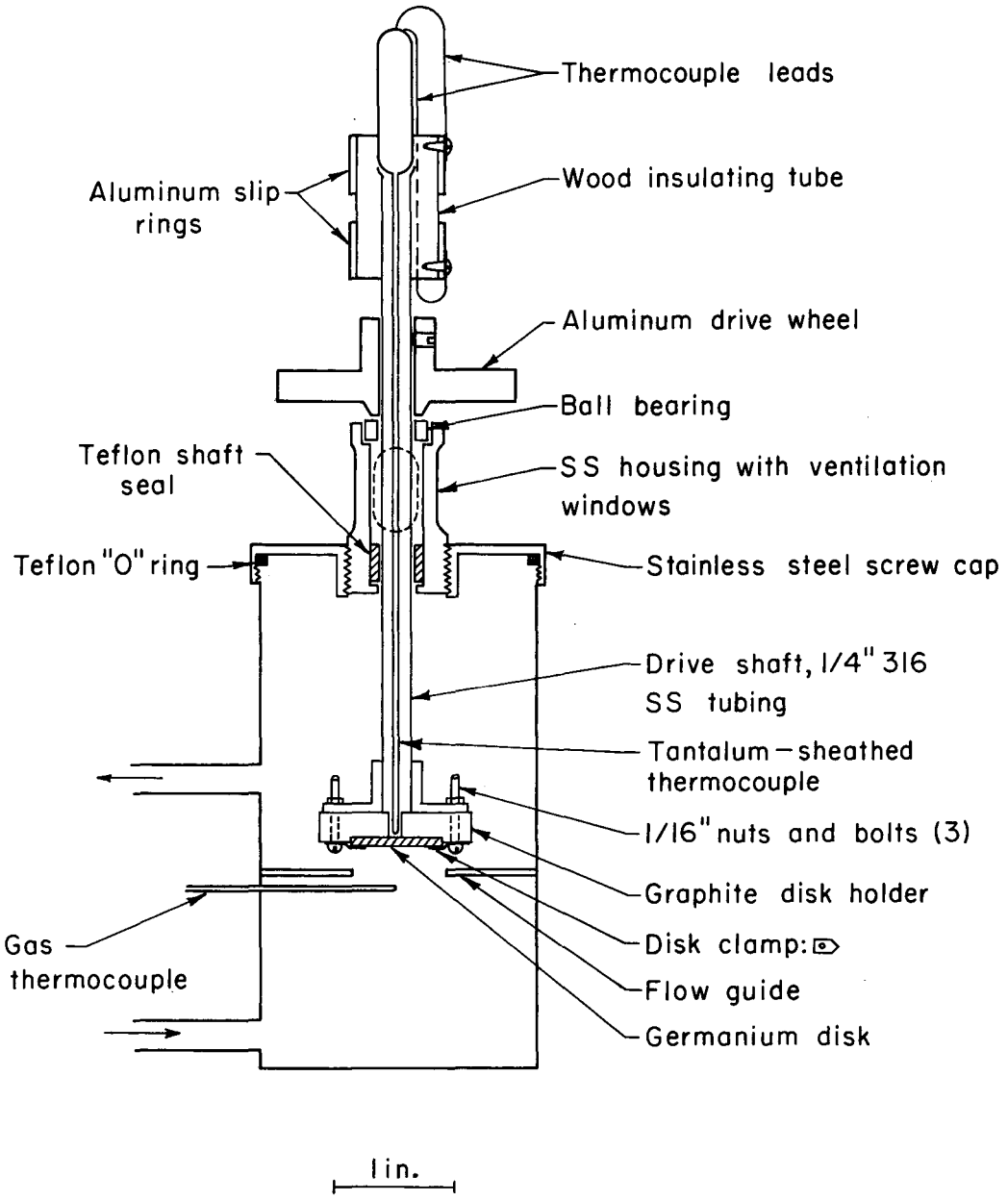

MUB-7404

Fig. 1

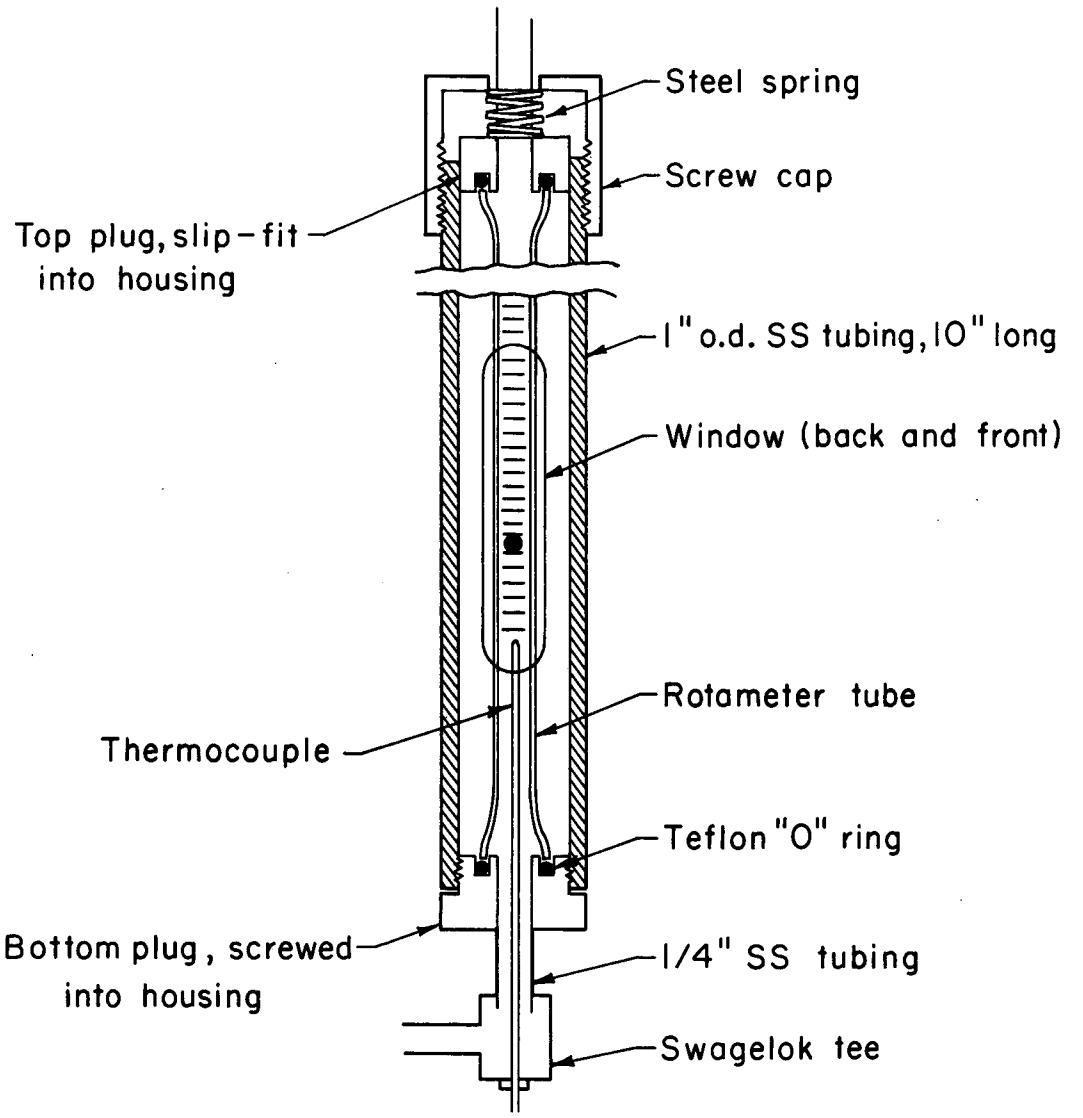

MUB-7402

Fig. 2

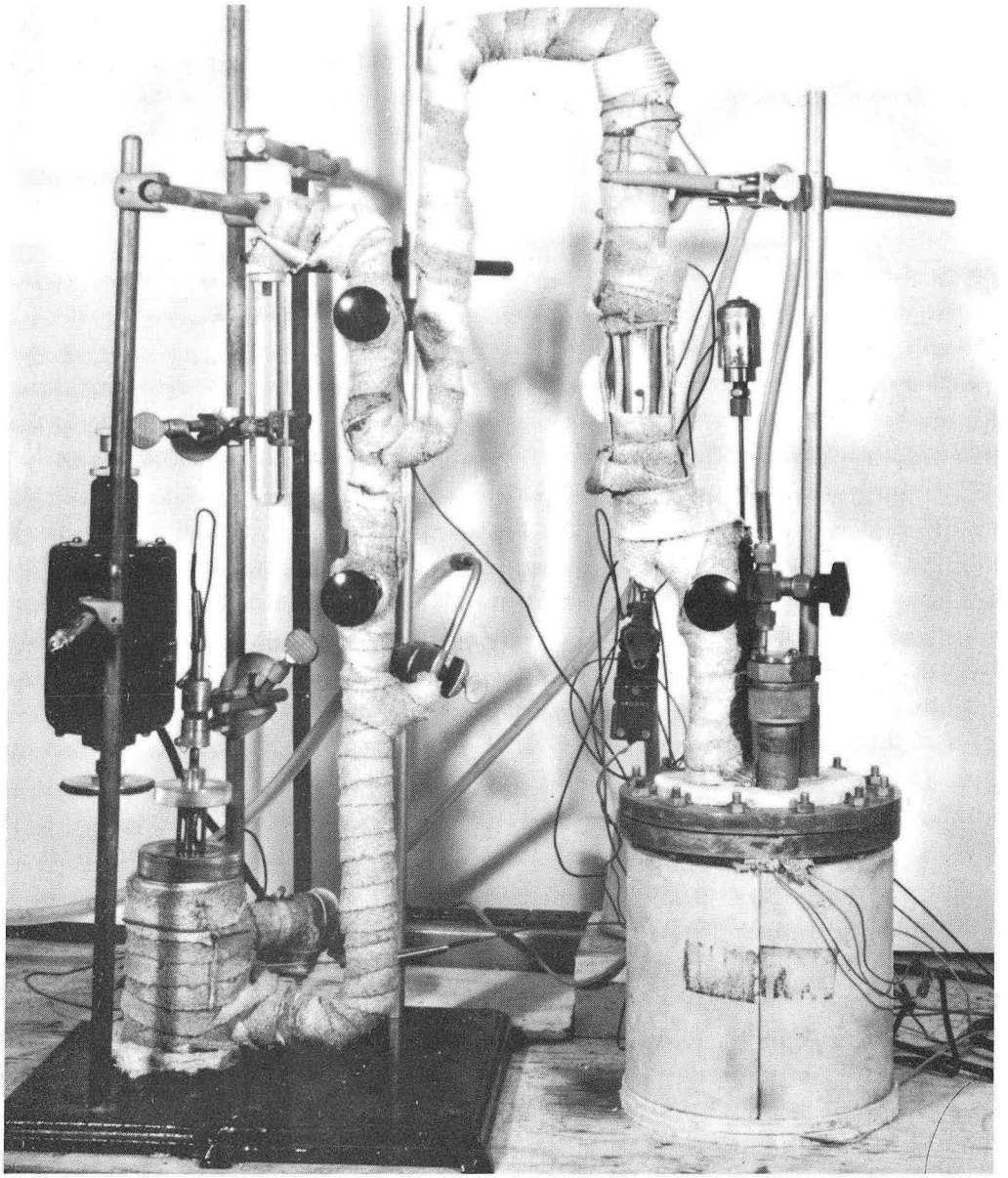

ZN-5368

Fig. 3

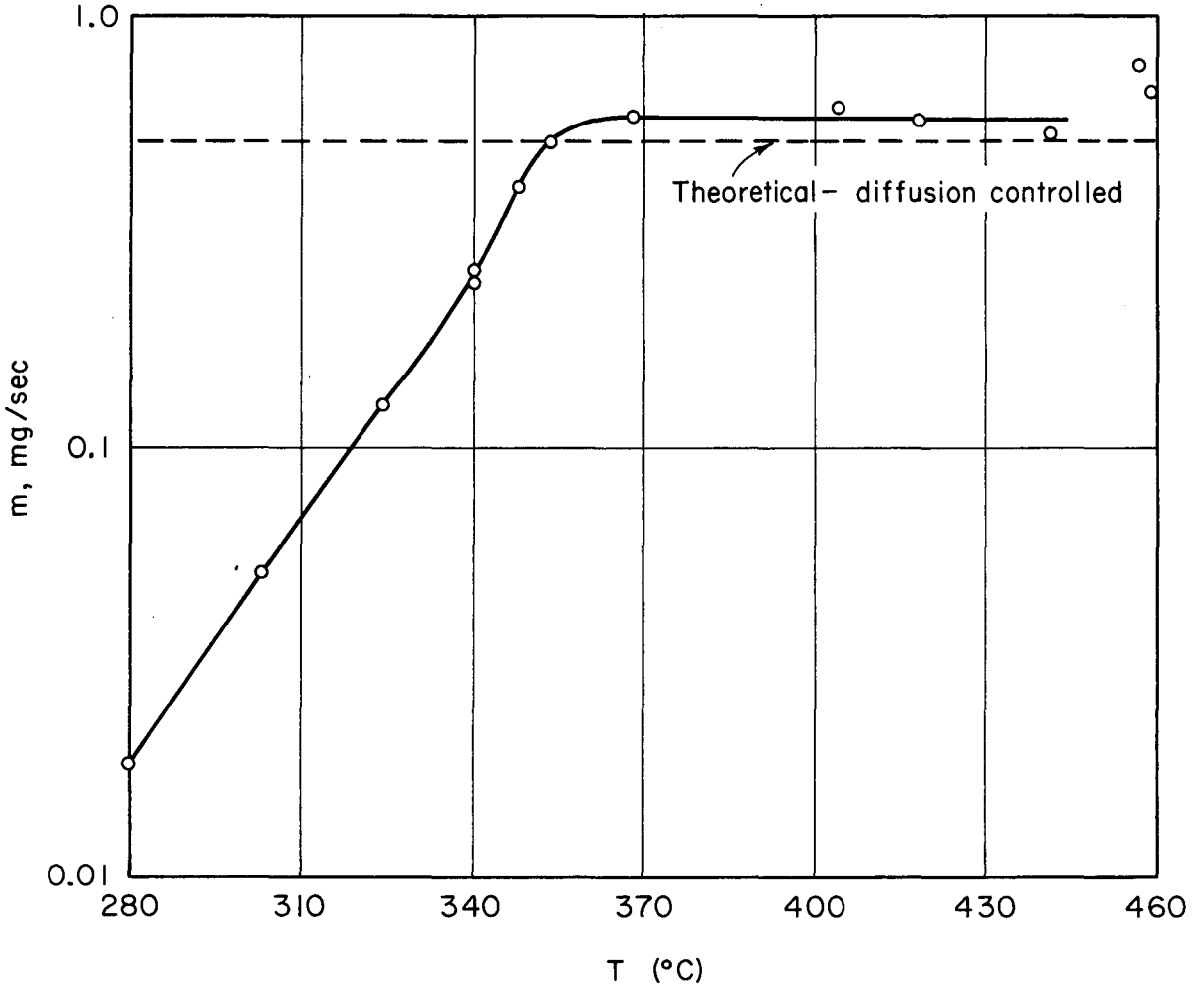

MUB-7400

Fig. 4

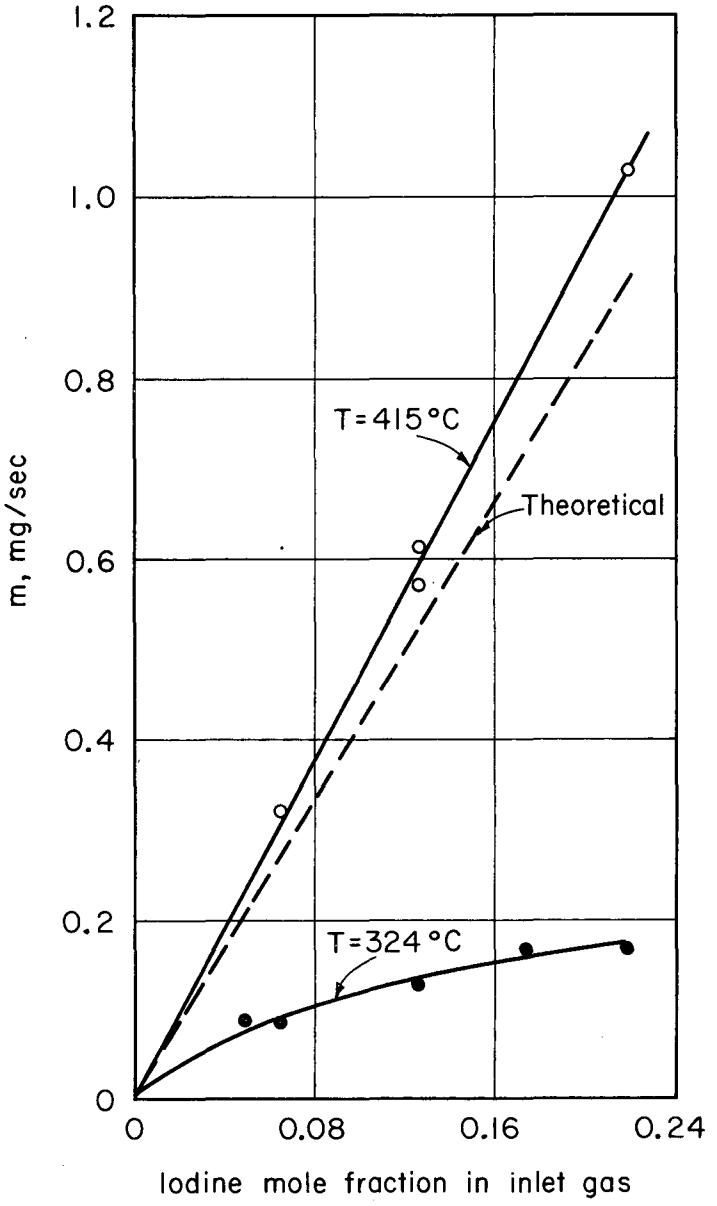

MUB-7401

Fig. 5

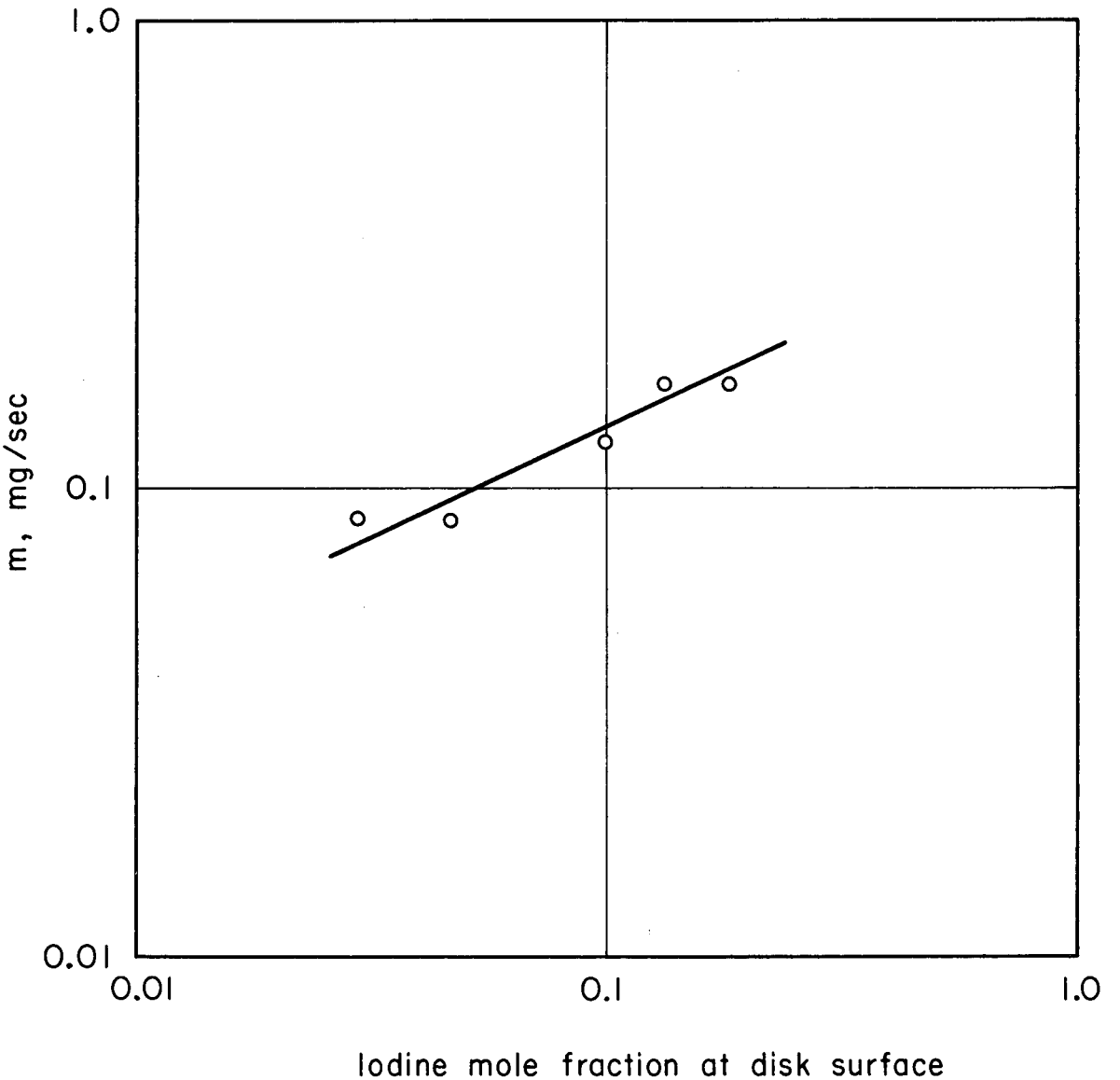

MUB-7406

Fig. 6

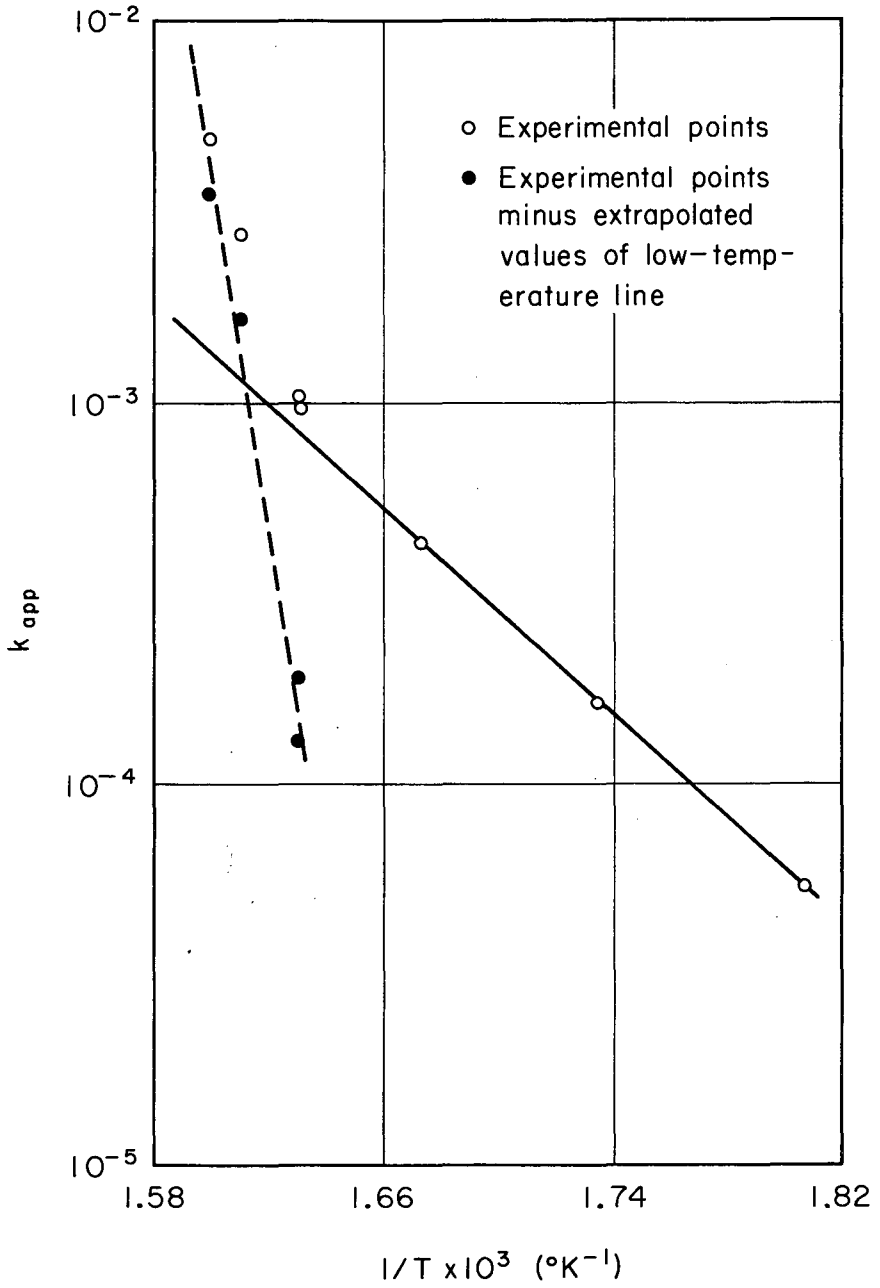

MUB-7405

Fig. 7

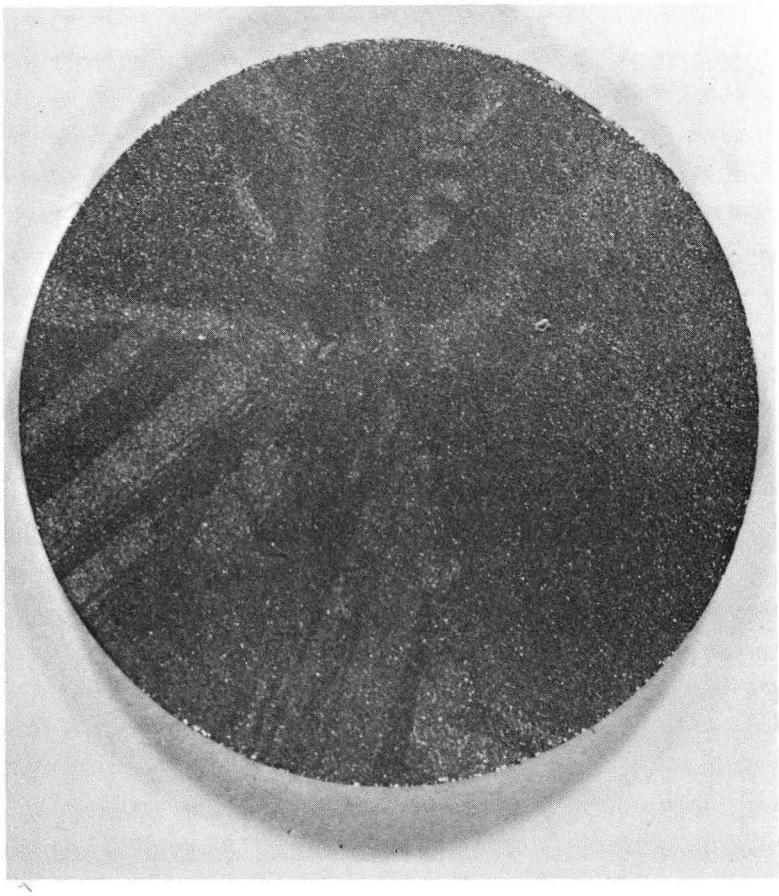

1

ZN-5369

Fig. 8a

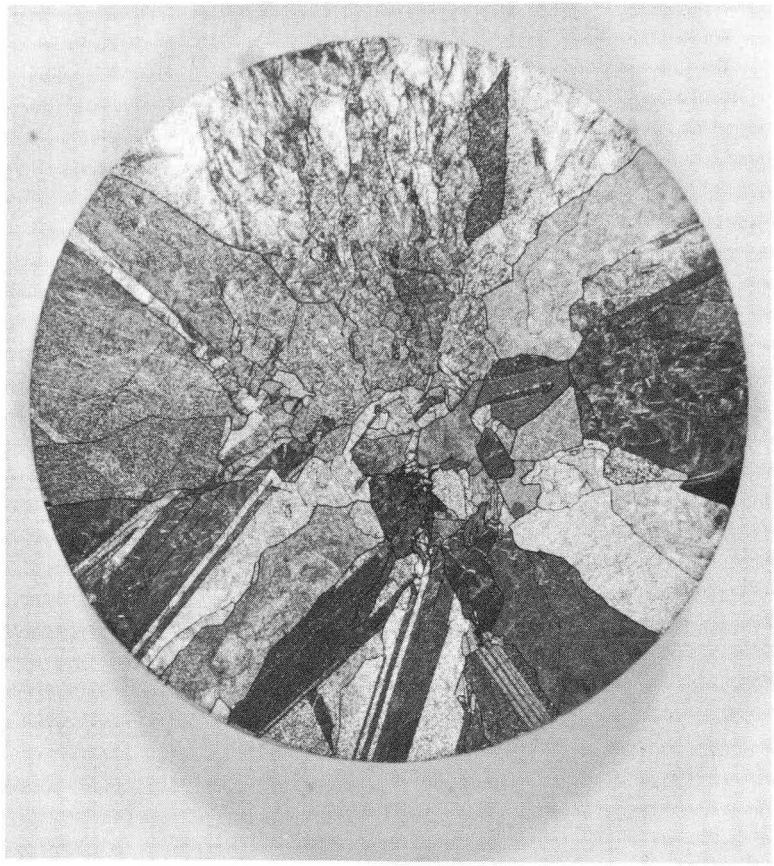

2

ZN-5370

Fig. 8b

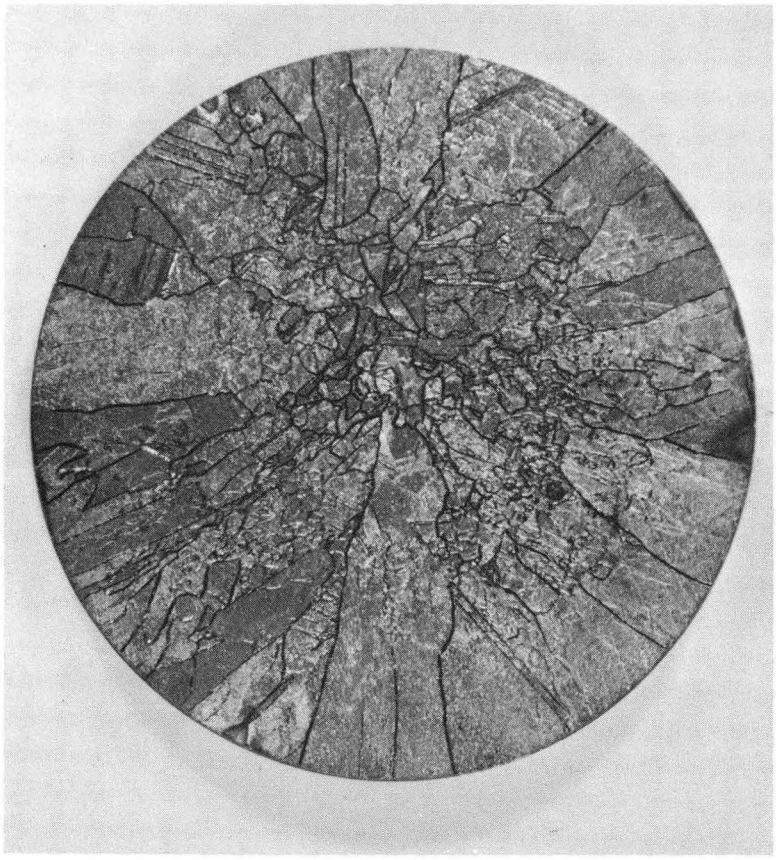

3

ZN-5371

Fig. 8c

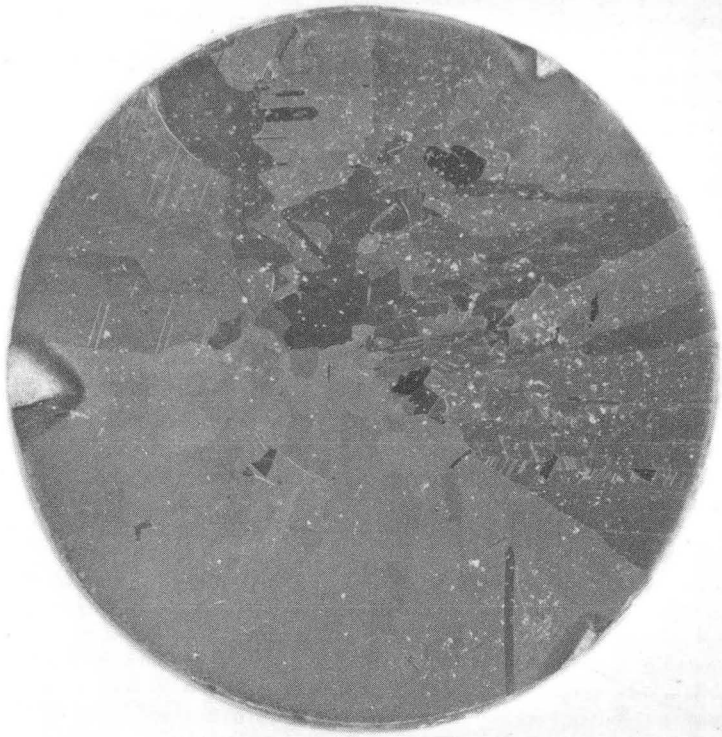

4

ZN-5372

Fig.8d

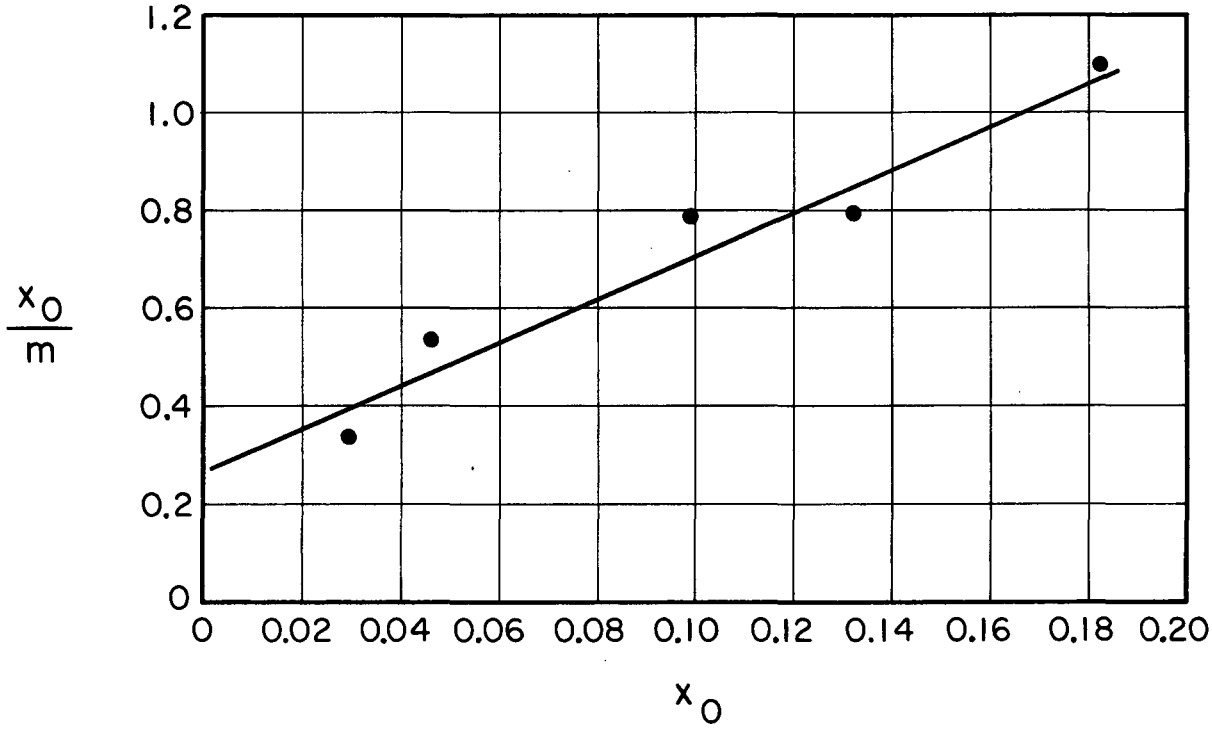

MUB-7709

Fig. 9

This report was prepared as an account of Government sponsored work. Neither the United States, nor the Commission, nor any person acting on behalf of the Commission:

A. Makes any warranty or representation, expressed or implied, with respect to the accuracy, completeness, or usefulness of the information contained in this report, or that the use of any information, apparatus, method, or process disclosed in this report may not infringe privately owned rights; or

B. Assumes any liabilities with respect to the use of, or for damages resulting from the use of any information, apparatus, method, or process disclosed in this report.

As used in the above, "person acting on behalf of the Commission" includes any employee or contractor of the Commission, or employee of such contractor, to the extent that such employee or contractor of the Commission, or employee of such contractor prepares, disseminates, or provides access to, any information pursuant to his employment or contract with the Commission, or his employment with such contractor.