UCRL-16383

University of California

Ernest O. Lawrence Radiation Laboratory

X-RAY EXAMINATION OF SQUARE WATER-COOLED COPPER MAGNET-CONDUCTOR BRAZE JOINTS

TWO-WEEK LOAN COPY

This is a Library Circulating Copy which may be borrowed for two weeks. For a personal retention copy, call Tech. Info. Division, Ext. 5545

Berkeley, California

DISCLAIMER

This document was prepared as an account of work sponsored by the United States Government. While this document is believed to contain correct information, neither the United States Government nor any agency thereof, nor the Regents of the University of California, nor any of their employees, makes any warranty, express or implied, or assumes any legal responsibility for the accuracy, completeness, or usefulness of any information, apparatus, product, or process disclosed, or represents that its use would not infringe privately owned rights. Reference herein to any specific commercial product, process, or service by its trade name, trademark, manufacturer, or otherwise, does not necessarily constitute or imply its endorsement, recommendation, or favoring by the United States Government or any agency thereof, or the Regents of the University of California. The views and opinions of authors expressed herein do not necessarily state or reflect those of the United States Government or any agency thereof or the Regents of the University of California.

International Symposium on Magnet Technology
Stanford University, Calif. Sept. 8-10, 1965

UCRL-16383

UNIVERSITY OF CALIFORNIA
Lawrence Radiation Laboratory
Berkeley, California

AEC Contract No. W-7405-eng-48

X-RAY EXAMINATION OF SQUARE WATER-COOLED COPPER MAGNET-CONDUCTOR BRAZE JOINTS

Richard A. Nickerson

September 1, 1965

X-RAY EXAMINATION OF SQUARE WATER-COOLED COPPER MAGNET-CONDUCTOR BRAZE JOINTS*

Richard A. Nickerson
Lawrence Radiation Laboratory
University of California
Berkeley, California

Brazed joint design and fabrication technology has been improved by x-ray quality control in early stages of magnet coil production.

The x-ray techniques discussed, though simple, require consideration of geometry and of exposure parameters, particularly kilovoltage. A method is described for proper choice of exposure kV, which permits the high-quality radiographs needed for quality control.

The joint design which proved to be most reliably manufactured (when a rigidly controlled process is followed) is discussed.

Introduction

The limitations on billet size in existing commercial extrusion presses for copper are, at present, about 250 pounds of copper billet. Thus the maximum length of conductor obtainable is a function of the cross-sectional area chosen. The making of splice joints, then, becomes an imposed necessity if conductor lengths exceed 250 pounds of copper.

The failure of these splice joints to withstand the plastic deformation required to wind them into coil structures, or the possible leakage of cooling water either into the coil insulation or to vacuum systems, has forced careful consideration of their design, fabrication, and inspection.

Inspection must not interfere unduly with production, yet must be capable of guiding the fabrication technique and providing the designer with feedback to guide the design for ease of fabrication and for reliable inspection.

From the author's experience, each AEC group designing coils has made its own peace with this vexing and plaguing problem, and no one seems to have solved it in exactly the same way. All groups seem to have found no practical alternative to brazing, although each seems to have its favorite brazing filler-alloy. Each also differs in details of joint design and method of application of the heat. These differences are minor, however, and the basic problems are common ones to which the following discussion will apply.

The Inspection Problem

Choice of Method

The "proof" test approach of pressurizing a joint with water or gas has an inherent difficulty that renders it unreliable. Areas of the joint surface not wet by braze alloy are likely to be well coated with flux. After going through the braze cycle these flux inclusions are quite glassy and (in the restricted volume of the joint) quite difficult to wash out with water. The flux plug may cause the joint to pass proof testing but fail in time. See Fig. 1 for such a failure. Thus proof testing has been augmented by nondestructive testing methods such as (a) penetrant inspection, (b) ultrasonic inspection, and (c) radiographic inspection.

Penetrants are useful only for surface-intersecting cracks or voids. However, the defect-detection sensitivity of the water-pressurizing proof tests can be increased by the addition of colored or fluorescent dyes to the pressurized water. This, however, does not get around the flux-plug difficulty, or work at all if even the smallest blockage to flow is present.

Ultrasonics is being used at present--but only by removing the joint, machining the square section round and concentric with the braze joint, then testing (hardly nondestructive). Newer techniques give promise of overcoming the present difficulties with this method and, indeed, present hope of a more acceptable solution to the inspection difficulties. But, as of this writing, I know of no one using it on a nondestructive routine basis.

Radiography seems to be the best method devised to date.

Fabrication Technology

The Nature of a Brazed Joint in Copper

A brazed joint in copper is a thin film interface usually 0.003 to 0.005 in. thick. This tolerance must be designed into the mating parts of the joint or the jigging which holds the parts for brazing. The surfaces must be clean at the flow temperature of the filler material if the alloy is to "wet" the copper and flow into the joint by capillary action. Some fluxing agent must be present, either as a component of the alloy (phosphorus or lithium-coppers are common examples), as an additive (the fluoride-boride fluxes are the common ones), or as an active gas atmosphere (hydrogen is most common). The flux must be active up to the flow temperature of the braze alloy and must be completely displaced by the brazing alloy as the braze is made. The braze

alloy must wet all the capillary surface of the joint and yet must not block the water passage.

Fixing the x-Ray Parameters

Geometry. Figure 2 shows that radiographing through the corners rather than across flats presents less subject contrast and therefore better defect detectability in the whole joint. For joints which have a cylindrical as well as a butt portion, tilting the beam 10 deg to the axis of the conductor (as shown in Fig. 3) gives another benefit. With the projections which this geometry affords, only one radiograph per joint is necessary to inspect all braze surfaces!

Sensitivity. Since the braze alloy film which we are inspecting is 0.003 in. thick (for best strength) no matter what the dimensions of bar and water bore are, the sensitivity may be defined as

$$S\ (\%) = \frac{0.003}{\sqrt{2} \times a - d} \times 100.$$

Values for this sensitivity are typically 0.25 % to 0.75%. Normal industrial practice (ASME Boiler Code, ASTM) covers 1.0 to 2.0% sensitivity. Sensitivities of 0.5% or less require using the best possible of x-ray techniques. Factors which assist increased defect detectability are:

(a) use of films with high film gamma (contrast index),

(b) exposures to high film density to take advantage of high film gammas,

(c) use of x-ray generators with small focal spot sizes, or

(d) use of long target-to-film distances,

(e) rigid clamping of sample and x-ray machine to prevent vibration, and

(f) (probably most important of all) choice of x-ray voltage to optimize the constrast-scatter ratio. This is discussed in full in Appendix A.

The Time Element

Radiography does interfere with coil production. To position the x-ray machine and film, make the exposure, and develop the film to the point where it can be read takes a minimum of about 25 min. This assumes that machine and radiographer are available as soon as the joint is made and cleaned. If the number of joints made per day is low, and (as is usually the case) joints are made at irregular time intervals throughout the work day, the need to have a radiographer quickly available may add materially to inspection costs.

It is hoped that the ultrasonic methods under development can reduce this inspection time to about 5 min. If this is possible, 100% inspection will become more reasonable in terms of cost and production interference.

Amount of Inspection

To my knowledge, no comprehensive study has been made of joint design and execution to relate these factors to serviceability. Thus the prime link (relating the indirect measurements of nondestructive testing to the direct property of service life) is missing. Many statistical sampling plans are available for establishing inspection confidence levels to obviate redundant inspection, but lack of the service correlations makes them questionable at best.

If the repair cost of a leak is low, and the leak does not seriously affect the operations of which the magnet may be a part, large inspection costs are not warranted. Inspection in this case may be confined to technician qualification tests.

In LRL's 88-inch cyclotron, induced radioactivity in the cyclotron magnet coils would preclude repair operations or make repairs cost more than coil unit replacement. Here, as in reactor components, inspection costs may reasonably be a large portion of the total cost.

Two Points Guide the Technology of Brazing

Surface Tension. If two concentric tubes with an optimum radial clearance of 0.003 in. are cleaned, carefully fluxed with appropriate flux, nested, and heated properly with a source of brazing alloy (i.e., a preform) at one end of the capillary space, we have an idealized capillary flow shear joint. We then expect the whole circumference of the end of the capillary space to be supplied with molten alloy at once, and we expect this supply of alloy to sweep axially along the capillary cylinder uniformly, pushing all molten flux before it and wetting both surfaces of the capillary volume completely.

Vapor Pressure. Brazing alloys used for this type of brazing are the lower-melting-temperature alloys of the basic silver-copper system modified with various combinations of zinc, cadmium, and tin to lower the melting temperature from 1535°F (the melting temperature of the binary silver-copper alloy) to between 1150°F and 1250°F for the ternary or quaternary alloys.

The presence of these high-vapor-pressure materials complicates the brazing procedures. For example, the quaternary alloy ASTM Type 4 (Handy Harmon Easy-Flo or equivalent) contains both cadmium and zinc. If this material is heated in a graphite pot with a liberal cover of flux, a time plot of temperature will look like Fig. 4. At 1145°F the solid alloy starts to melt. By 1165°F the melting is complete and the temperature of the liquid brazing alloy continues to rise. At 1200°F this temperature rise ceases and the alloy commences to boil. The vapor given off in this boiling is predominantly cadmium. The temperature will remain at 1200°F (or rise only very slowly) until all cadmium is boiled from the alloy or until the boiling point of the zinc is reached.

All alloys with zinc or cadmium should show

this behavior. Silver-copper alloys without these constituents have melting temperatures which are 1500°F and higher, and present severe heating problems.

Brazing

The above two points must guide the joint-making technique above and beyond the points normally covered in most brazing manuals such as cleaning, fluxing, heat control, etc.

What happens in all too high a percentage of the time is that instead of our ideal surface-tension picture we have rivers of alloy flowing through the capillary, leaving voids which are more easily by-passed than caused to be wetted, resulting in a joint as seen in Fig. 5.

The boiling (caused by exceeding 1200°F for ASTM Type 4) need not cause defective joints--but, if the technician does not appreciate that the phenomenon is taking place, it most certainly will cause defective joints. When boiling occurs the cadmium vapor expels liquid solder from the joint and produces a vapor-filled bubble. As the temperature falls below 1200°F where these bubbles are, the cadmium vapor will condense. The bubble will attempt to contract but a frozen surface may prevent liquid feed. The result will be voids (containing a vacuum), which are readily observable in radiographs, occurring on the upper surface of cylindrical areas, since the bubbles rise through the molten solder to the top of the cylinder.

More careful withdrawal of heat from the finished joint through the range 1200°F to 1145°F will assure a supply of liquid solder to these contracting bubbles and a sound, void-free joint can result.

This vapor-pressure difficulty, then, is solely under the control of the technician and is not a function of design. Radiographs of "bubbled" joints are most convincing to him of his responsibility in this matter!

Design

Three designs of joint--(a) the butt, (b) the sleeve, and (c) the male-female--are the most popular.

The butt joint must be jigged into position for brazing, which makes two problems. (a) Better control of hole concentricity is required if water-passage offsets are to be avoided. The use of floating internal draw-die mandrels by the manufacturers of tubing makes this control difficult. (b) The thickness of the solder joint is almost impossible to control, for in makeup the molten braze alloy covers the joint from view, and the high expansion coefficient of copper (compared with the jig material) compounds the problem. A small thickness of solder joint makes for poor radiographs.

The sleeve design has its own problems. The sequence of operations in making this joint is: (a) (optional) Preplace preform wire rings at end of counter bores. (b) Flux counter-bore surfaces. (c) Flux sleeve. (d) Insert sleeve and close joint. (e) Heat. (f) Add brazing alloy. The sleeve is insulated from the heat by its flux film, so heating uniformity suffers. Even more troublesome is the fact that this type of joint is inherently a capillary-flow joint and suffers from the lack of reliability discussed above!

The male-female design (Fig. 6) seems best suited to solving fabrication difficulties. The machining can be done by using a guide bushing in the water bore. This assures alignment of the water passage and makes eccentricity visible even on the completed joint.

If the following sequence is used, most of the other difficulties can be overcome by technician training:

(a) Flux and "pretin" both male and female sections.
(b) Cool to room temperature.
(c) Remove flux and inspect for complete coverage.
(d) Reflux.
(e) Jig with end of male at female opening (the tinning will prevent insertion).
(f) Heat by conduction (do not let any flame touch flux).
(g) When braze alloy is at flow temperature, insert male into female portion and close joint.
(h) Decrease heat slowly and feed alloy at butt if alloy is being drawn into joint as cadmium vapor condenses.

By this method one operator made 120 consecutive x-ray-passable joints which required that at least 90% of the cylindrical area and butt area be covered with braze alloy! It is felt that the elimination of the capillary wetting by pretinning and the wiping action of assembly gives the best possibility of x-ray quality joints. The vapor pressure problem is no less by this method, and technician training (guided by x ray) is still imperative.

Summary

Properly performed x-ray radiography of properly designed conductor joint (designed with metallurgy and the problems of the brazing technician in mind) can produce high-quality, repeatedly reliable brazed conductor joints only by careful analysis of the sequence of operations and attention to detail.

Appendix A

Radiography utilizes local radiation-intensity differences to produce local film-density differences which are the film images of defects.

The ability to see small defects as film images, then, is a threefold problem:

First, the film must produce the highest

density difference for a given intensity difference. This is a film characteristic and is fixed when the film manufacturer and type are chosen. It is not a parameter after this choice has been made.

Second, the direct radiation difference from defect and its adjacent area must be maximized by a consideration of the radiation absorption equation

$$\Delta I = I_0 \ell^{-\mu \rho t} (\text{defect}).$$

Third, the total radiation intensity producing the image and its adjacent area compared with the direct radiation difference must be considered. This factor is equivalent to "signal-to-noise ratio."

Factors 2 and 3 are seldom considered quantitatively. They are opposing factors. Factor 2, the direct radiation difference, is maximized by increasing μ, the absorption coefficient. Increased μ is obtained by lowering kilovoltage of the x-ray machine. Factor 3, the signal-to-noise ratio, is increased by decreasing the proportion of "noise" or "scatter." This is accomplished by raising the kilovoltage of the x-ray machine.

Obviously optimum technique is a compromise between these two opposing factors. Quantitative treatment of this compromise yields the result that sensitivity is a maximum for

$$\mu \rho t = 2,$$

where μ is mass absorption coefficient (cm^2/g),
ρ is density (g/cm^3),
and t is thickness (cm).

Thus a given thickness (t) of a given material (with a given ρ) must be radiographed so that

$$\mu = 2/\rho t.$$

The relationships between photon energy (monoenergetic kV) and absorption coefficients (μ) are available (i.e., Nondestructive Testing Handbook, Section 27, pp. 27.1 to 27.41).

The spectrum output of most commercial x-ray machines is such that the relationship between average spectrum effective kV and the applied tube voltage is

$$kV_{eff} = 2/3\ kV_{max} \approx kV\ (\text{monoenergetic}).$$

This approximation is sufficiently accurate to use for successful optimization of kilovoltage, and has been used to select inspection parameters for radiography of copper conductor stock.

Footnote

*Work done under auspices of the U. S. Atomic Energy Commission.

FIGURE LEGENDS

Fig. 1. Magnet Conductor joint failure.

Fig. 2. Subject contrast in radiography.

Fig. 3. Radiograph through conductor joint.
(positive print from radiograph)

Fig. 5. Radiograph of improperly made joint.
(positive print from radiograph)

Fig. 4. Temperature-time relationship on heating silver solder.

Fig. 6. Joint detail.

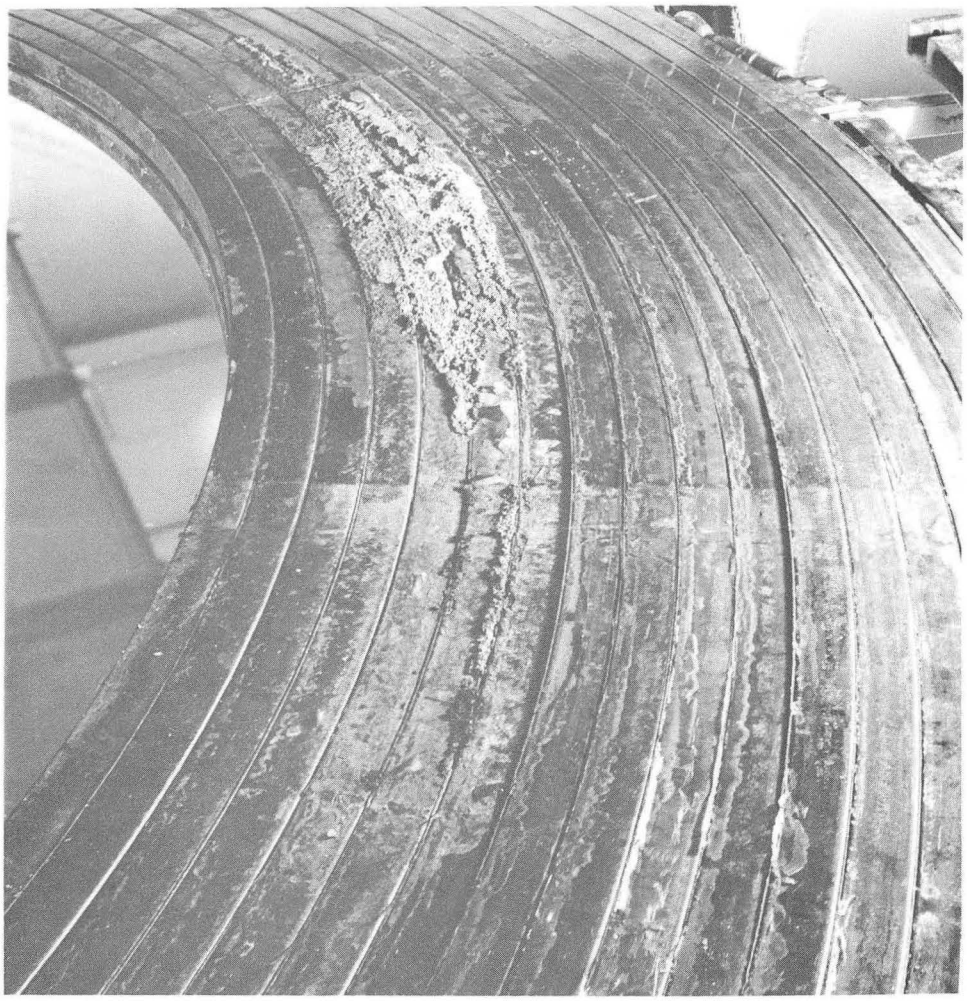

ZN-5125

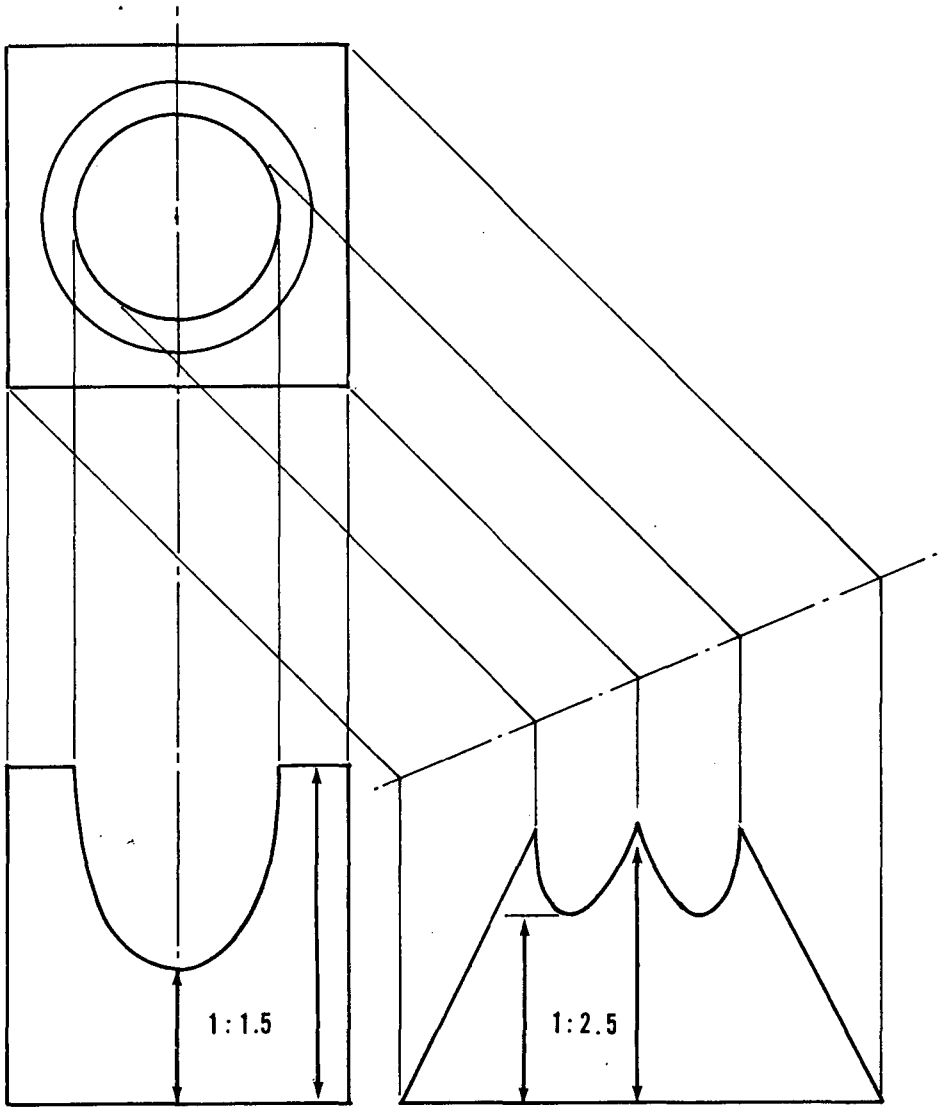

MUB-7593

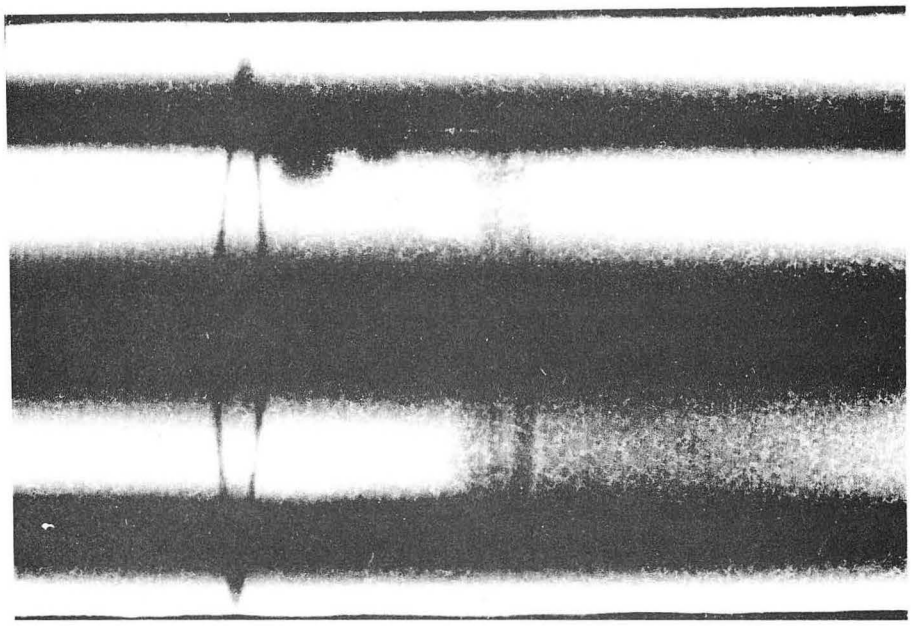

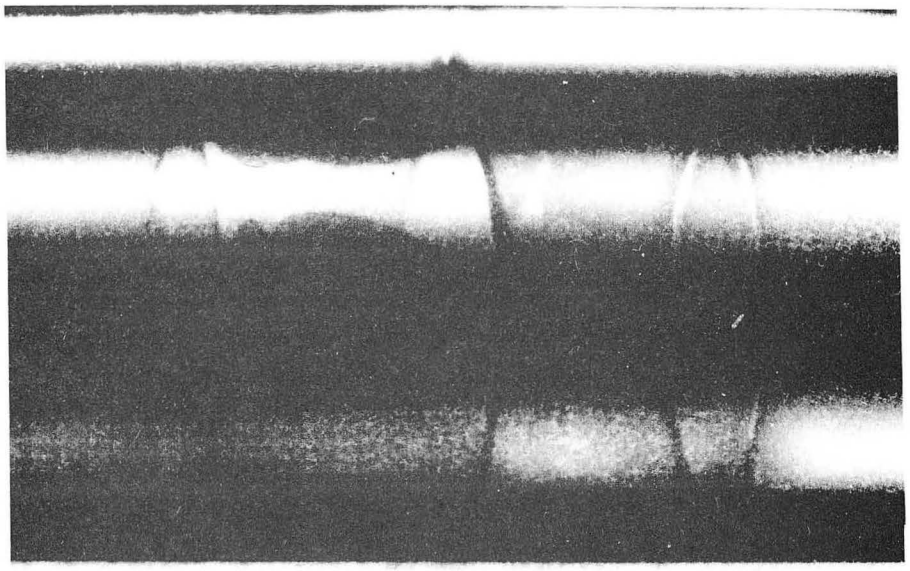

ZN-5104

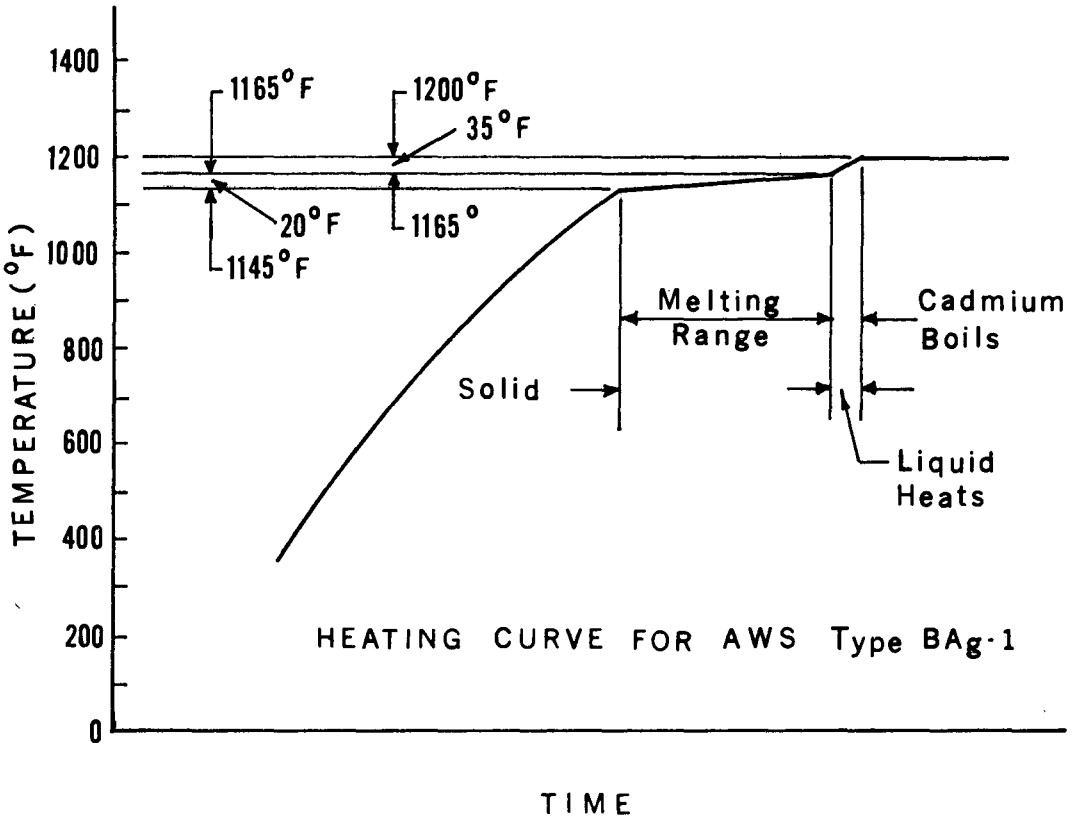
1400
1200
1000
800
600
400
200
0
TEMPERATURE (°F)
1165°F
1200°F
35°F
20°F
1165°
1145°F
Melting Range
Cadmium Boils
Solid
Liquid Heats
HEATING CURVE FOR AWS Type BAg-1
TIME

MUB-7594

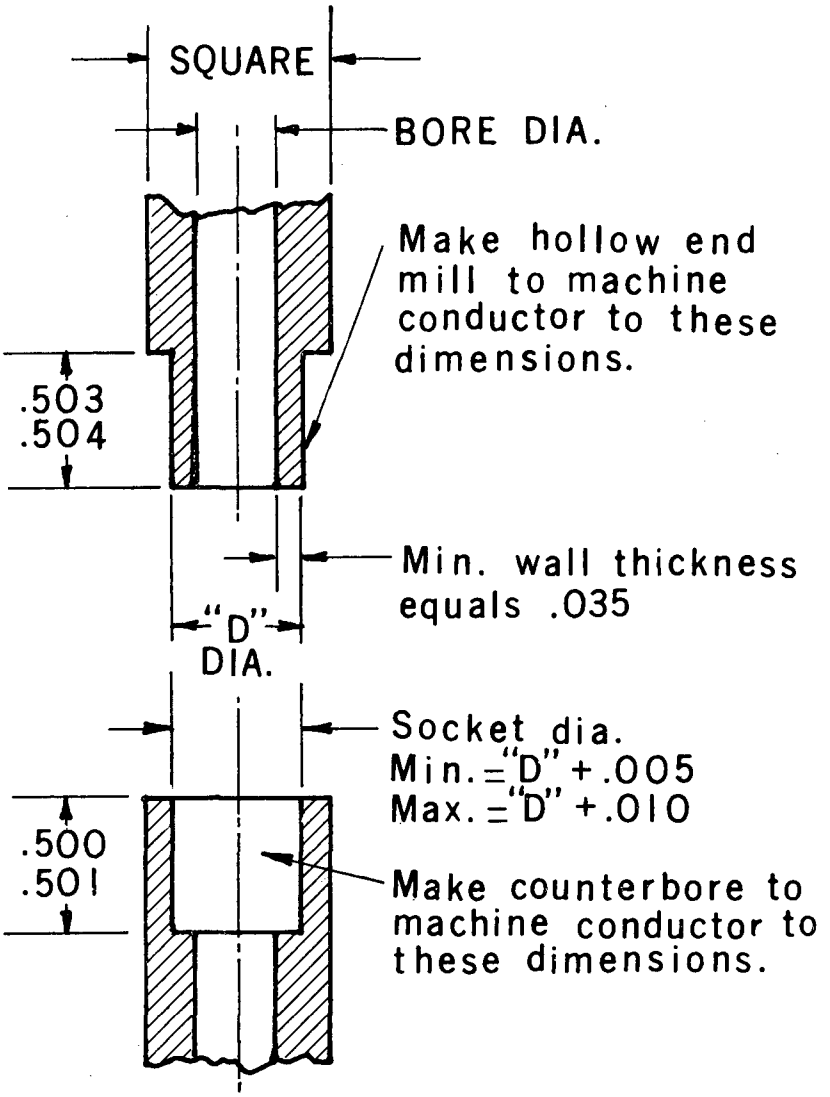

JOINT DETAIL

MUB-7592

This report was prepared as an account of Government sponsored work. Neither the United States, nor the Commission, nor any person acting on behalf of the Commission:

A. Makes any warranty or representation, expressed or implied, with respect to the accuracy, completeness, or usefulness of the information contained in this report, or that the use of any information, apparatus, method, or process disclosed in this report may not infringe privately owned rights; or

B. Assumes any liabilities with respect to the use of, or for damages resulting from the use of any information, apparatus, method, or process disclosed in this report.

As used in the above, "person acting on behalf of the Commission" includes any employee or contractor of the Commission, or employee of such contractor, to the extent that such employee or contractor of the Commission, or employee of such contractor prepares, disseminates, or provides access to, any information pursuant to his employment or contract with the Commission, or his employment with such contractor.