UCRL-16386

University of California

Ernest O. Lawrence Radiation Laboratory

COST ESTIMATING MAGNET SYSTEMS
WITH THE AID OF A COMPUTER

TWO-WEEK LOAN COPY

This is a Library Circulating Copy which may be borrowed for two weeks. For a personal retention copy, call Tech. Info. Division, Ext. 5545

Berkeley, California

DISCLAIMER

This document was prepared as an account of work sponsored by the United States Government. While this document is believed to contain correct information, neither the United States Government nor any agency thereof, nor the Regents of the University of California, nor any of their employees, makes any warranty, express or implied, or assumes any legal responsibility for the accuracy, completeness, or usefulness of any information, apparatus, product, or process disclosed, or represents that its use would not infringe privately owned rights. Reference herein to any specific commercial product, process, or service by its trade name, trademark, manufacturer, or otherwise, does not necessarily constitute or imply its endorsement, recommendation, or favoring by the United States Government or any agency thereof, or the Regents of the University of California. The views and opinions of authors expressed herein do not necessarily state or reflect those of the United States Government or any agency thereof or the Regents of the University of California.

Submitted to International Symposium on
Magnet Technology, Stanford University
September 8-10, 1965

UCRL-16386

UNIVERSITY OF CALIFORNIA
Lawrence Radiation Laboratory
Berkeley, California

AEC Contract No. W-7405-eng-48

COST ESTIMATING MAGNET SYSTEMS WITH THE AID OF A COMPUTER

H. P. Hernandez, R. W. Schwarz, and R. B. Yourd

September 3, 1965

COST ESTIMATING MAGNET SYSTEMS WITH THE AID OF A COMPUTER

H. P. Hernandez, R. W. Schwarz, and R. B. Yourd

Lawrence Radiation Laboratory
University of California
Berkeley, California

Summary

The computer was a very effective aid in the parameter optimization and preliminary cost estimates for the 200-BeV Accelerator Study: the 8-BeV injector synchrotron gradient magnets Collins quadrupoles, and bending magnets; and for the 6-meter bubble chamber magnet. Because the parameter cost sensitivity was quickly available, the time required to select the system parameters was reduced, and more detailed cost estimates were thus permitted.

The COMA Fortran Program briefly outlined in this report can be used to compute twelve basic magnet geometries, including quadrupole, box, "C," and "H" types.

For the 6-meter spherical-bubble-chamber magnet of conventional iron-copper arrangement, the COMA Program was used, with the subroutine EFFIC added. Magnetic fields up to 70 kG were studied, and optimum coil dimensions and core thicknesses found. At 50 kG the capital plus operational cost for an operating time of 20 000 hours was 32-million dollars.

For the 8-BeV Injector Synchrotron Gradient Magnet System, the MAGHYP Program aided in parameter selection and cost estimate. Cost optimization showed that the parameter selections can be made more accurately than future market conditions can be predicted.

Introduction

The evolution of any new system usually includes the phases of concept, feasibility, development, design, construction, test, and operation. The magnitude of the system cost, whether recognized or not, is decided during the conceptual phase when the system is first described and its principal parameters established. During this phase, fast comprehensive cost estimates are needed not only to indicate the magnitude of the cost, but, more important, to determine the relative costs of different concepts that govern the optimum choice. This paper is directed to some computer programs used for this type of cost estimate.

The cost is, of course, affected in the later phases also, but to a lesser degree. Following the concept phase, design studies that satisfy the basic parameters are made. Explicit specifications are developed and detailed consideration is given to the economics of construction, reliability, and operation. During the "free-wheeling" concept phase the cost might vary by decades; in the design phase, the maximum variation is by low multiples; in the construction phase, maximum cost variation is in percentages and finally the cost of operation will change least of all.

Although many parameter relationships are known, their relative importance is not apparent at the start of a problem. The influence of parameters on cost can often be determined more economically and usually more accurately by a computer than by hand calculation.

The computer performs the routine computations very quickly and its printing is legible, but an important decision is how much detail to include in the program. How often the program will be used determines the amount of detail, but once a program is in operation it is often used more than anticipated. In contrast, an obsession for a "completely general" program can delay the project, or lead to poor assumptions that are buried in the program and lead to loss of confidence.

Judgment is necessary in the use of a simplified cost-estimating program, just as it is in the use of any tool. The parameter limits initially given to the computer may not provide an optimum solution and the program will have to be run again. When an optimum solution is found, the computed magnet geometry may be such that the program assumptions are not satisfied. For example, the field may have been assumed to be uniform, but the computed geometry would indicate that such uniformity is unacceptable. Judgment is required to select acceptable cases and observe trends.

The use of the computer for cost estimates reduces the lead time, permits many more cases to be studied, and makes available a legible printed record. The engineer, freed from much detail work, has more time to consider what the system must do, and to think of more concepts; preferably he should be able to program. In a large study group, he who can operate at the interface between engineers, scientists, and mathematicians, and the computer is valuable.

The computer programs outlined in this report were used very effectively to select the parameters and optimize the cost in the 200-BeV Accelerator Study: the 8-BeV injector synchrotron gradient magnets, Collins quadrupoles, and bending magnets; and the 6-meter bubble chamber magnet. By means of them, it was possible to study the differential costs of the various components to show how a change of one parameter

affected the system costs. I wish to emphasize that these are cost-estimating programs and not design programs.

These programs were first used to select the range of interest; after a review of the parameters, a design check was made with a separate design-type computer program (such as SIBYL) not discussed in this report. This process was repeated many times until the technical aspects of the design were within an optimal cost and practical range. The program was then used to determine the effect on the final cost of changing parameters or unit costs of the various components. For example, it was possible to quickly find the magnetic field of the 8-BeV injector synchrotron that gave the minimum cost of the injector synchrotron. It was also easy to compare the cost of stranded and solid magnet-coil conductors.

The COMA Program

The COMA program computes some of the basic parameters of magnets and magnet systems. The final step in these computations is the calculation of costs and the tabulation of these costs as a function of two, three, or four variables, set initially by the user. This program enables a user to determine quickly what effect each parameter has upon the cost of the system, thus leading to an optimum design from an economic viewpoint. COMA is not a design program and does not produce a technically efficient system, but it does evaluate the system, as defined by the user via input-data cards.

This evaluation is made under the assumption that all costs are directly proportional to the variables with which they are associated. The various cost rates used are not internally supplied, but must be supplied by the user according to his own experience.

COMA is comprised of several subprograms, each serving a separate purpose. Where necessary, each subprogram provides its own branches to accommodate all 12 different magnet types handled by COMA. One subprogram, function EFF (called by subroutine GAPP), should be altered to suit each individual user. The purpose of function EFF is to provide the magnetization efficiency (gap A turns per total A turns). Clearly the variation of efficiency with magnet type, magnet shape, and magnetic-field intensity is a matter for the magnet designer. The function as it now appears in the FORTRAN list shows an efficiency of 90% for all cases. The user must provide any necessary alterations to produce efficiencies that approach reality more closely.

There are 12 different types of magnets handled by COMA (Fig. 1). The first four are quadrupoles, the next five are box-type magnets, and the last three are conventional C and H magnets.

For all of these except the box-type magnets, the user has an option that provides the basic gap dimensions, or the orbital errors specified by the physics of beam dynamics. The logic diagram, Fig. 2, shows the basic order of computations; details are beyond the scope of this report. Subprogram BDYN computes an elliptical beam aperture if the latter option is selected. GAPP computes (a) the basic gap dimensions pertinent to the particular magnet type, (b) ampere-turns, and (c) the coil window dimensions. The iron volume is computed by function VOLFE; no provision is made for loose laminations. Subprogram VOLLEN computes the volume, and the coil length from the length of the mean turn. End effects are accounted for by assuming 90° bends occurring almost as soon as the coil leaves the magnet ends; the bend radii are assumed to be equal to the coil window width (or height). A small allowance is made for the extra length needed for joints and connections.

The input data needed for a run are put on just a few cards. On the first three cards, which are common to all types of magnets, these data are:

1. Magnet type and the option concerning the gap dimensions,
2. Cost rates and magnet life in hours,
3. Basic physical parameters, constant for the run.

The fourth and fifth cards depend upon the option chosen and/or the magnet type. The fourth card (if needed) contains the orbital deviations or the the gap dimensions. The fifth card (if needed) contains the six S's, shown in Fig. 1. There are two, three or four final cards, the number depending upon the magnet type. These cards contain core-shape values, which are used and permuted as the independent variables. As many as nine (and as few as one) values are permitted for each variable. Generally four or five values for each variable seem most profitable.

The Modified COMA Program

In this section we show the method used to determine the capital and operational costs for a large bubble-chamber magnet having circular copper coils and rectangular iron legs for fields up to 70 kG. The EFFIC subroutine was added to COMA to give the approximate total ampere-turns for these coils when the flux density in the return paths is taken above saturation. Consideration of saturated iron cores now enables cost data to be obtained for higher magnetic fields with or without saturated cores.

The program is in use on the cost study of the copper-iron magnet for the 6-meter spherical bubble chamber shown in Fig. 3. In particular, this section discusses how the EFFIC subroutine obtains the coil ampere-turns by an approximation method suggested by Charles G. Dols.

The assumptions listed in the EFFIC subroutine as shown here are:

1. The magnetic field, B, is assumed constant and uniform in the gap volume

(although not necessarily a requirement), and varies linearly through the coil section (Fig. 3). The uniform field implies a coil arrangement that contains the magnetic field over the whole gap height, h. To satisfy this condition requires that the vertical distance between the coils be small, for example, < 20% the field diameter and of the gap height.

2. The saturation limit of the iron is 20 kG.

3. The iron-yoke flux is uniformly distributed over its cross-sectional area, and no local saturation occurs.

4. The efficiency of the unsaturated magnet is 100%, and changes abruptly at the saturation limit of the iron. The limitations of this assumption are discussed in greater detail in the following paragraphs.

In addition, accommodation was made for cases where the vertical leg thickness and the horizontal yoke thicknesses are unequal. Under such conditions one portion of the iron path might saturate before another, owing to the difference in iron cross-sectional areas. The method used checks each cross section separately for its saturation limit.

The relationships between ampere-turns (NI) and field intensity (B) in gauss are shown in Fig. 4. On this figure, the gap reluctance in ampere-turns is calculated as NI = 2.02 Bh, where the magnetic field, B-gauss, and the gap height, h-inches, are constant. This NI_{gap} value is also the total NI required for this magnet if it had a lossless core (i.e., infinite iron in the flux-return path). Point A on this line represents the saturation limit of the iron (BIA), and is obtained from a ratio of saturated-leg cross-section area to effective air-core area, with 20,000 G assumed in the iron. If the leg cross sections are unequal, one portion will saturate at BIA, and total saturation will occur at BIB where

$$BIB = 20{,}000 \left(\frac{\text{leg max cross-section area}}{\text{effective air-core area}} \right) .$$

Above BIB, point B, the iron is completely saturated. If all iron thicknesses are equal, points A and B coincide, and complete saturation occurs above BIA.

At the other extreme, an air-return-path (no iron) magnet is assumed. With the symbols shown on Fig. 3 and the expressions for two solenoidal coils, NI_{air} is calculated as

$$NI_{air} = \frac{4.02(B)(A_c)}{K} ,$$

where A_c is the coil cross-sectional area, and K is a function of the coil geometry:

$$K = (X_1)\ln \left\{ \frac{R_2 + \sqrt{X_1^2 + R_2^2}}{R_o + \sqrt{X_1^2 + R_o^2}} \right\}$$

$$-(X_2)\ln \left\{ \frac{R_2 + \sqrt{X_2^2 + R_2^2}}{R_o + \sqrt{X_2^2 + R_o^2}} \right\} .$$

These two values for ampere-turns, NI_{gap} and NI_{air}, result in the two linear relationships passing through the origin on Fig. 4. The NI_{actual} vs B-curve for an iron-core magnet passing through saturation will lie between these two extremes. The required curve is assumed to follow the infinite iron relationship until the first saturation occurs at point A. This is a result of assumption 4 above, in which the magnet efficiency is assumed to remain at 100% until this point. In a more accurate study, the efficiency at each B would be calculated and the continuous transition from one slope to another determined. The true curve is better approximated by the dashed line on Fig. 4, but improvement is noted only in the region near points A and B.

If all iron thicknesses are equal (BIA=BIB), the iron saturates completely at point A; the actual curve breaks from the infinite steel path, and follows a new path parallel to the air-core relationship for all B greater than BIA. If only partial saturation occurs at A, the path from A to B may be determined by means of a ratio of unsaturated iron length to total iron length. Point B is located by proportioning by this same ratio the horizontal distance between NI_{gap} and a line parallel to NI_{air} that passes through A. Above B the path becomes parallel to the air core line, since the iron has reached its full capacity and can carry no additional flux. As the program now stands, plotting the curves by hand provides time for some contemplation; however, in a quadrupole study a magnet cross section was drawn by the computer.

The NI_{actual} value obtained in this manner is then cycled through the main COMA program so that the coil power requirement can be calculated. The power-supply and cooling-system capital costs and all the total operating costs are then obtained as a function of power. Thus each of these costs is based on the total ampere-turns, NI_{actual}, value obtained in the EFFIC subroutine.

Typical parameters for the 6-meter bubble chamber magnet illustrated in Fig. 3 are shown in Table I. The dimensions varied in the COMA program were coil width, a, and iron thickness, W.

Table I. 6-Meter bubble chamber magnet.

Dimensions			
R_o = 140 in.		b	= 94 in.
S_1 = 6 in.		S_2	= 3 in.
X_1 = 106 in.		X_2	= 12 in.
W_2, W_3 = variable		a	= variable
Copper resistivity	= 0.74 microhm-in.		
Coil packing fraction	= 0.6		

Capital Costs	
Copper coil	$2.50/lb
Iron core	$0.29/lb
Power supply	$57.00/kW
Cooling system	$12.70/kW
Operating Costs	
Power supply	$0.00700/kWh
Cooling system	$0.00194/kWh

On the basis of these parameters, the results shown on Fig. 5 give the total cost of the magnet as a function of various coil widths for fields of 10 to 70 kG and an operating time of 20,000 hours. The two cases shown consider uniform leg thickness ($W_2 = W_3 = 50$, and $W_2 = W_3 = 200$ inches, respectively). The range of coil widths "a" from 10 to 110 inches allows an optimum coil dimension to be obtained for each magnetic field. The minimum cost (at the optimum coil width) is then plotted as a function of B for each iron thickness (Fig. 6). Note that the crossing of the curves indicates a different optimum iron thickness at each field. For example, where the 100-inch-thick yoke line crosses the no-iron magnet curve, there exists an optimum yoke thickness somewhere between 0 and 100 inches. At fields around 20 kG, the optimum yoke thickness is less than 10 inches and is so thin it may collapse; in this case it may be more econimical to omit the top and bottom yokes altogether unless they are needed for magnetic shielding, which is another problem.

A complete study would include additional curves in which each cost parameter is varied to show its relative effect on the total cost. Varying the lifetime from 20,000 to 40,000 hours multiplied the total cost by a factor of 1.5 to 1.7, depending upon the magnetic field. For example, at B=60 kG, the total cost of a magnet operating for 40,000 hours is 160% that of the same magnet operating for 20,000 hours. The effect of changing the capital-cost parameters is not as noticeable at high fields. Increasing both the copper and iron costs 14% increases the total cost by only 4 to 5% over the entire range of magnetic fields and lifetimes from 20,000 to 80,000 hours. Only at fields less than 20 kG is there a significant (up to 20%) effect due to varying these capital cost rates, since in this region the total capital cost is the significant portion of the total. Increasing the power-supply-unit cost 22% caused a total cost increase of approximately 10% at high fields, and became negligible as the field decreased. After an initial optimization of various coil and iron dimensions is made, and the sensitivity of each parameter on the total cost examined, an initial cost can be given for a particular magnet as a function of the gap magnetic field.

The MAGHYP Program

The selection of parameters and cost estimates for an 8-BeV proton synchrotron alternating gradient magnet system were greatly aided by the use of the MAGHYP Fortran Program.

The AG magnet system studied has an aperture containing an elliptical vacuum chamber, shown in Fig. 7. Beam dynamic parameters such as betatron oscillation amplitudes, closed-orbit deviation, and vacuum-tank-wall thickness are used to compute an elliptical-shaped vacuum tank surrounding the beam, which osculates with the hyperbolic pole tips of the magnet. Following this, the gap height at the orbit and the ampere-turns are computed. The width of the pole tip and the pole leg in the early runs were estimated by the computer, but later, when the magnet cross section was known, the pole-tip width became input data. A typical set of input data is shown on Table II and the output on Table III.

The key expression in the magnet computation is the determination of the coil width, m, (second column Table III) as a function of coil power, P (first column). A diagram showing the derivation of the quadratic equation

$$m^2 + [f(P)]\ m + f(P) = 0,$$

from which the coil width m is found, is shown on Fig. 8 and the symbols described on Table IV. This procedure of using a block diagram for illustrating tedious algebra was very helpful for recall, and permits viewing the entire computation at one time. In Ref. 1 a more detailed description is given of these and other expressions used to obtain the results shown in Table III.

The optimization of the total capital plus operation cost (column 10, Table III) of the magnet system versus coil power dissipation (column 1) determines the coil cross-sectional area and thus the core dimensions of the gradient magnet.

The actual construction cost of the magnet will be determined by present technical decisions and by future construction costs. Technical decisions such as the mechanical arrangement of the coils and core, insulation system, and allowable flux density in the core are the most difficult. This type of decision "trades off" the initial capital costs against future reliability and minimum down time and is largely a matter of experience and judgment. As a guide, it is necessary to know the effects of parameter changes on cost. Some cost differentials found in the injector synchrotron magnet study were:

	Capital	Total
Gap	1200 k$/in.[a]	1400
Pole width	600 k$/in.	700
Magnet efficiency	100 k$/%	
Vertical distance between coils	60 k$/in.	60
Coil space factor[b]	70 k$/in.	70

[a] k$/in. means thousands of dollars per inch.

[b] Space factor = $\frac{\text{coil copper area}}{\text{cut out in core lamination}}$.

B GAUSS	7119.
RADIUS INCHES	1165.
NUMBER OF MAGNETS	48.00
MAGNET LENGTH INCHES	152.51
REPETITION CYCLES PER SEC	18.00
MAGNET EFF	0.97
ELEC RESISTIVITY,OHM-INCH	0.000000740
COIL ASPECT RATIO, WIDTH/HT	1.81
COIL PACKING FRACTION	0.33
COIL EDDY POWER WATTS PER LB	1.60000
VERT CLEAR. BETWEEN COILS,GAPS,	1.62

COST PARAMETERS

MACHINE TOTAL LIFE HOURS	67500.00
POWER DOLLARS PER KW HR	0.006
COIL DOLLARS PER LB	3.60
CORE DOLLARS PER LB	1.00
STORED ENERGY DOLLARS PER JOULE	1.16
POWER SUPPLY DOLLARS PER KW	90.00
INDUCTOR + COIL ISQR /COIL ISQR	1.66
WATER PUMP PWR DOLLARS PER KWHR	0.00186
WATER COOLING SYS $ PER KW	160.000
WATER COST DOLLARS PER KWHR	.0000800

BEAM APERTURE PARAMETERS

RADIAL BETATRON OSC AMPLITUDE,CM	1.3200
RADIAL CLOSED ORBIT DEVIATION,CM,	0.9600
RADIAL INJECTION ERROR,CM,	0.3700
RADIAL PHASE OSC AMPLITUDE,CM,	0.4800
RADIAL AMPL FUNCTION,BETA MIN,M,	6.2900
RADIAL AMPL FUNCTION,BETA MAX,M,	17.3700
RADIAL SAFETY FACTOR	1.2000
VERTICAL BETATRON OSC AMPLITUDE,CM,	1.4500
VERTICAL CLOSED ORBIT DEVIATION,CM,	0.8600
VERTICAL INJECTION ERROR,CM,	0.1500
VERTICAL SAFETY FACTOR	0.5000
VACUUM TANK WALL THICKNESS,INCHES,	0.4000

Table II

MAGNET GAP, INCHES 3.3972

MAGNET PROFILE, INVERSE METERS 4.4190
CORE LOSS, WATTS PER LB 0.14
POLELEG WIDTH INCHES 9.0000
POLETIP WIDTH INCHES 11.0000

CORE FLUX DENSITY, GAUSS 10582.03

MAGNET GAP STORED ENERGY, JOULES 1169346

USEFUL FIELD ELLIPSE HALF WIDTH, INCHES 2.7441
USEFUL FIELD ELLIPSE HALF HEIGHT, INCHES 1.2101
POLE-TANK INTERSECT HOR DIST FROM ORBIT, IN 0.9197
POLE-TANK INTERSECT VER DIST FROM ORBIT, IN 1.5397

PWR	M	K	WT CU	WT FE	CO CU	CO FE	CO TO	PSCO	CAP	TOTAL	CORE	EDDY	TOTAL
KW	IN		LBS	LBS	**********	MILLIONS OF DOLLARS	**********				KW	KW	KW
50	27.677	1.357	1679213	2762961	6.045	2.763	8.808	1.822	11.128	13.899	378	2687	3114
100	18.908	1.267	731580	2147060	2.634	2.147	4.781	1.590	6.621	8.012	293	1171	1564
150	15.204	1.229	458789	1886903	1.652	1.887	3.539	1.527	5.248	6.264	258	734	1142
200	13.048	1.207	331764	1735432	1.194	1.735	2.930	1.501	4.586	5.447	237	531	968
250	11.598	1.192	258881	1633592	0.932	1.634	2.566	1.489	4.197	4.986	223	414	887
300	10.539	1.181	211803	1559205	0.762	1.559	2.322	1.484	3.942	4.700	213	339	852
350	9.722	1.172	178968	1501850	0.644	1.502	2.146	1.482	3.763	4.512	205	286	842
400	9.068	1.166	154802	1455909	0.557	1.456	2.013	1.483	3.632	4.385	199	248	847
450	8.529	1.160	136294	1418051	0.491	1.418	1.909	1.485	3.532	4.299	194	218	862
500	8.075	1.155	121678	1386163	0.438	1.386	1.824	1.489	3.454	4.241	189	195	884
550	7.686	1.151	109850	1358829	0.395	1.359	1.754	1.493	3.393	4.204	186	176	911
600	7.347	1.148	100087	1335064	0.360	1.335	1.695	1.497	3.343	4.192	182	160	943
650	7.050	1.145	91895	1314155	0.331	1.314	1.645	1.502	3.304	4.172	180	147	977
700	6.785	1.142	84926	1295574	0.306	1.296	1.601	1.508	3.271	4.172	177	136	1013
750	6.548	1.140	78925	1278922	0.284	1.279	1.563	1.513	3.245	4.180	175	126	1051
800	6.334	1.137	73706	1263886	0.265	1.264	1.529	1.519	3.223	4.193	173	118	1091
850	6.140	1.135	69126	1250222	0.249	1.250	1.499	1.525	3.206	4.212	171	111	1131
900	5.962	1.134	65076	1237734	0.234	1.238	1.472	1.532	3.191	4.235	169	104	1173

Table III

Table IV. List of symbols for Fig. 8

Note	Units	
A_c	in.^{2}	Cross-section area, two coils
m	inches	Magnet coil width
n	inches	Coil height
σ	%	Coil aspect ratio, width/height
V_c	in.^{3}	Coil, total volume
$\bar{L}$	inches	Mean length of one turn of coil in magnet
ρ	inches	Magnetic radius of synchrotron
K		Dimensionless ratio that indicates the amount of additional copper required for the coil cross-overs at the ends of each magnet unit. $K=\bar{\ell}/2X$
W	lb	Total weight of magnet coil copper
d	lb/in.^{3}	Coil conductor, specific weight (copper, 0.302)
f	%	Coil packing fraction
P	kW	Coil average power
I_{RMS}	amps	Magnet rms current
R	ohms	Coil, total electrical resistance
r	ohm inch	Electrical resistivity
N	turns	Total number of turns in coil
a'	in.^{2}	Coil conductor, cross-sectional area
V_{cu}	in.^{3}	Coil copper, total volume
c		Ratio, $I_{rms}/I_M = \sqrt{3/8}$
I_{MAX}	amps	Magnet maximum current
B_{MAX}	gauss	Maximum magnetic field in gap
h	inches	Magnet gap height
μ	%	Magnet efficiency, $\frac{NI_{gap}}{NI_{total}}$
$\bar{\ell}$	inches	Mean length of coil turn in magnet unit
w	inches	Magnet pole-tip width
X	inches	Magnet unit length
n_m		Number of magnets

The 8-BeV synchrotron magnet system requires a very uniform magnetic field in the gap and two kinds of magnet apertures (focusing and defocusing). The magnet coils are series connected and must track $B(t) = f(i)$ very closely. Thus the AG magnet cores operate well below saturation and the iron weight is not minimized, whereas in the big bubble chamber magnet previously discussed, the field uniformity was relatively unimportant and the main consideration was cost. Therefore, the amount of iron was optimized for the bubble chamber. The judgment, then, as to what to optimize is very different for these two magnets.

MAGHYP also compares different kinds of coils. The gradient magnet system was cost optimized for coils having both solid and stranded conductors. The capital cost of a magnet system having stranded coils is slightly higher than the solid conductor case because more coil space is needed for stranded coils; thus a larger core is needed for this particular magnet, the difference in space factors between the stranded and solid conductors is small because a 1-inch clearance around the coils is needed to keep the stray capacitance low. The solid-conductor-magnet system has a higher capital-plus-operations cost because of the higher operating costs caused by the eddy-current losses in the coil. The cost difference in this particular case is small and depends upon the actual cost of the coils. There would be no difference in magnet system total costs should the stranded conductor coils cost $1.30 per lb more to manufacture than the solid conductor coils.

The cost-optimization curve for the AG magnet is shown on Fig. 9. The dotted oval area around the capital cost indicates the probable range of capital cost and power dissipation. Several minimum total costs were determined by changing the unit costs of the coil, core, power supply, and the cost of power in different combinations (Table V). Each minimum total cost has a corresponding capital cost, and the locus of these points determines the oval. The probable cost area is not sharply defined and the ±25% possible cost variation represents (hopefully) extreme limits.

The flatness of the "total cost" near the minimum ($200,000 within 200 kW) shows that technical and design decisions have a small cost effect relative to the probable actual cost. The object then is to select parameters in such a way that the total cost curve is shallow in the minimum region as well as just being minimum. If this condition is satisfied, parameter selections made in the present will be just as desirable in the future.

Since the actual unit costs are contingent upon future economic conditions and are not known until the project is completed, the predicted minimum cost can be realized only by extreme good luck. The magnet designer, then, is confounded by the fact that the magnet parameters that must be selected today are determined by prices tomorrow.

References

1. H. P. Hernandez, Advanced Accelerator Booster Synchrotron Magnet, Parameter Study, June 1964, UCRL Engr. Note ACO303 M3390, Aug. 12, 1964 (unpublished).

Table V. Injector synchrotron magnet system cost optimization.

		Probable value	Highest power	Lowest power	Highest cost	Lowest cost
Unit costs						
Coil	($/lb)	5.00	6.00	3.60	6.00	3.60
Core	($/lb)	1.00	1.25	0.75	1.25	0.75
Stored energy storage system	($/J)	1.16	0.75	1.35	1.35	0.75
Power supply	($/kW)	90	60	120	120	60
Power cost	($/kWh)	0.006	0.004	0.008	0.008	0.004
Coil Dissipation	(kW)	800	1000	650	850	800
Capital cost	(Mega $)	5.0	4.7	4.9	6.1	3.6
Minimum total cost	(Mega $)	6.6	5.9	6.4	7.9	4.6

Figure Captions

Fig. 1. Magnet cross-sections that can be computed by COMA.

Fig. 2. Logic diagram for the COMA fortran program. Given the gap parameters and unit costs, COMA estimates the magnet dimensions, weights, power and costs for various magnet shapes.

Fig. 3. Large bubble chamber magnet.

Fig. 4. Ampere turns vs. gap magnetic field saturation effect of iron yoke.

Fig. 5. Total cost vs. coil width gap field. 10 – 70 kg.

Fig. 6. Total cost vs. gap field optimum coil width.

Fig. 7. Injector synchrotron. Gradient-Magnet cross section.

Fig. 8. Diagram of algebraic steps for computing the magnet coil width, m. The expression is used in the MAGHYP fortran program. The diagram is very useful for recall and exposes the details of a problem for fast checking.

Fig. 9. Injector synchrotron magnet system cost optimization.

Table Captions

Table II. Input data for an alternating gradient synchrotron magnet as printed by MAGHYP.

Table III. Output data for an alternating gradient synchrotron magnet as computed and printed by MAGHYP.

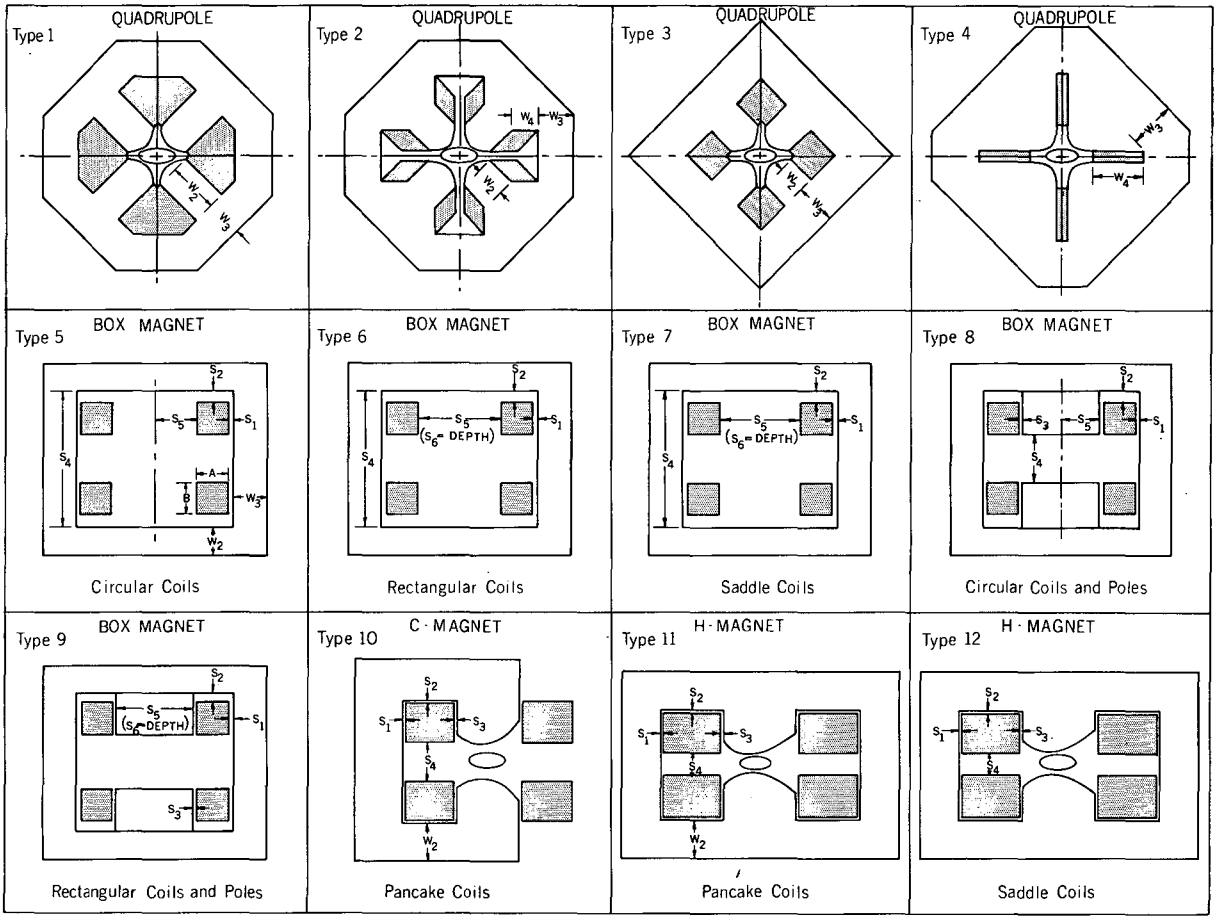

Figure 1

MUB-7633

Fig. 1

Logic Diagram

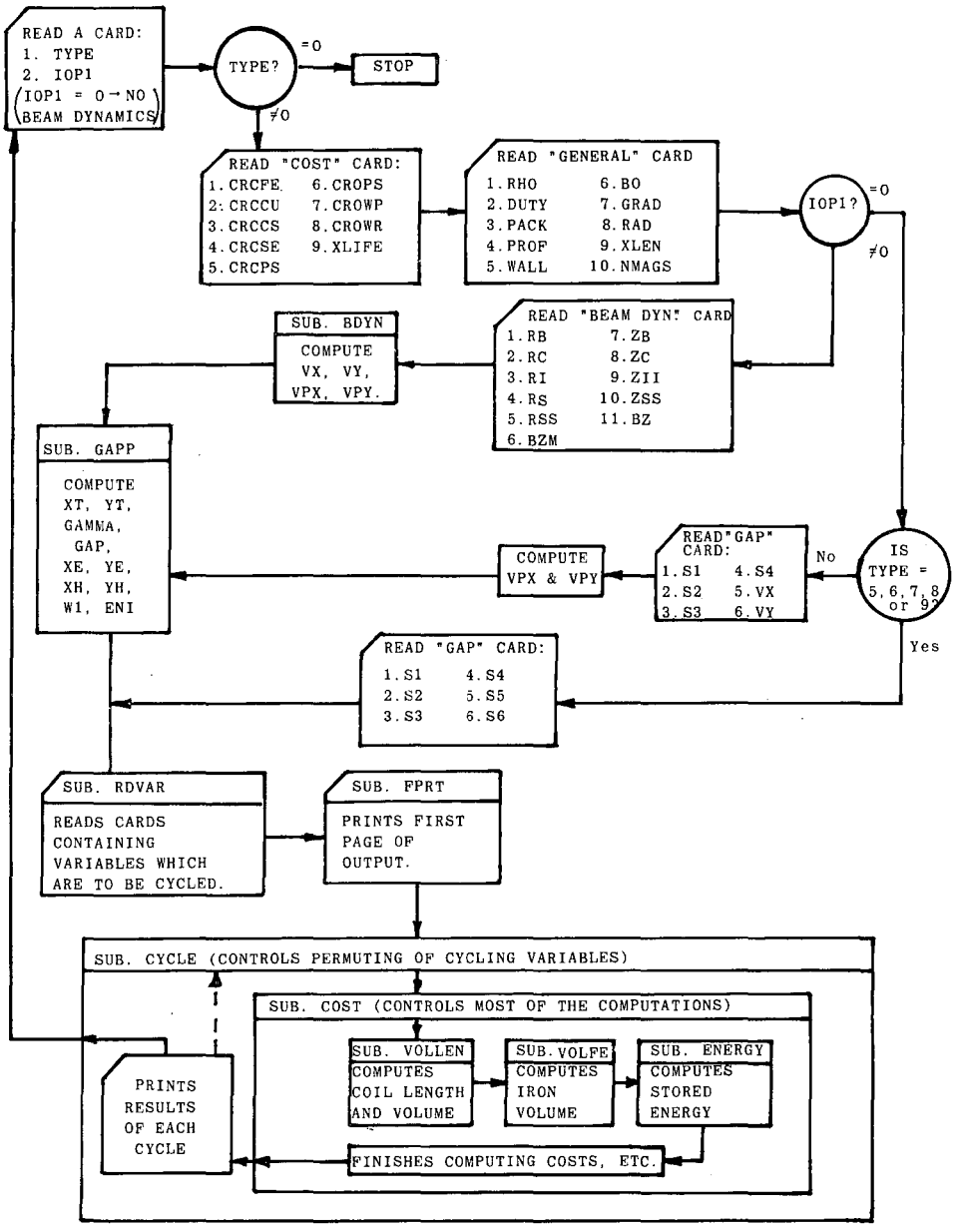

Figure 2

MUB-7654

Fig. 2

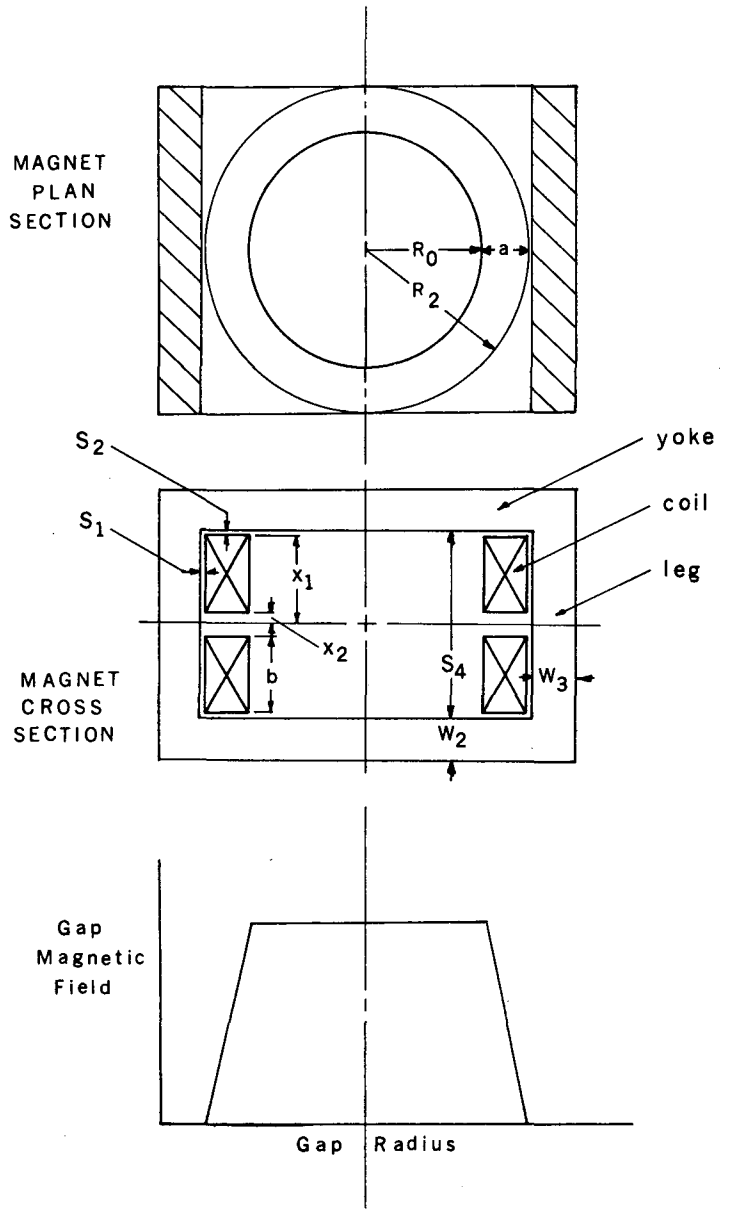

FIGURE 3
LARGE BUBBLE CHAMBER MAGNET

MUB-7634

Fig. 3

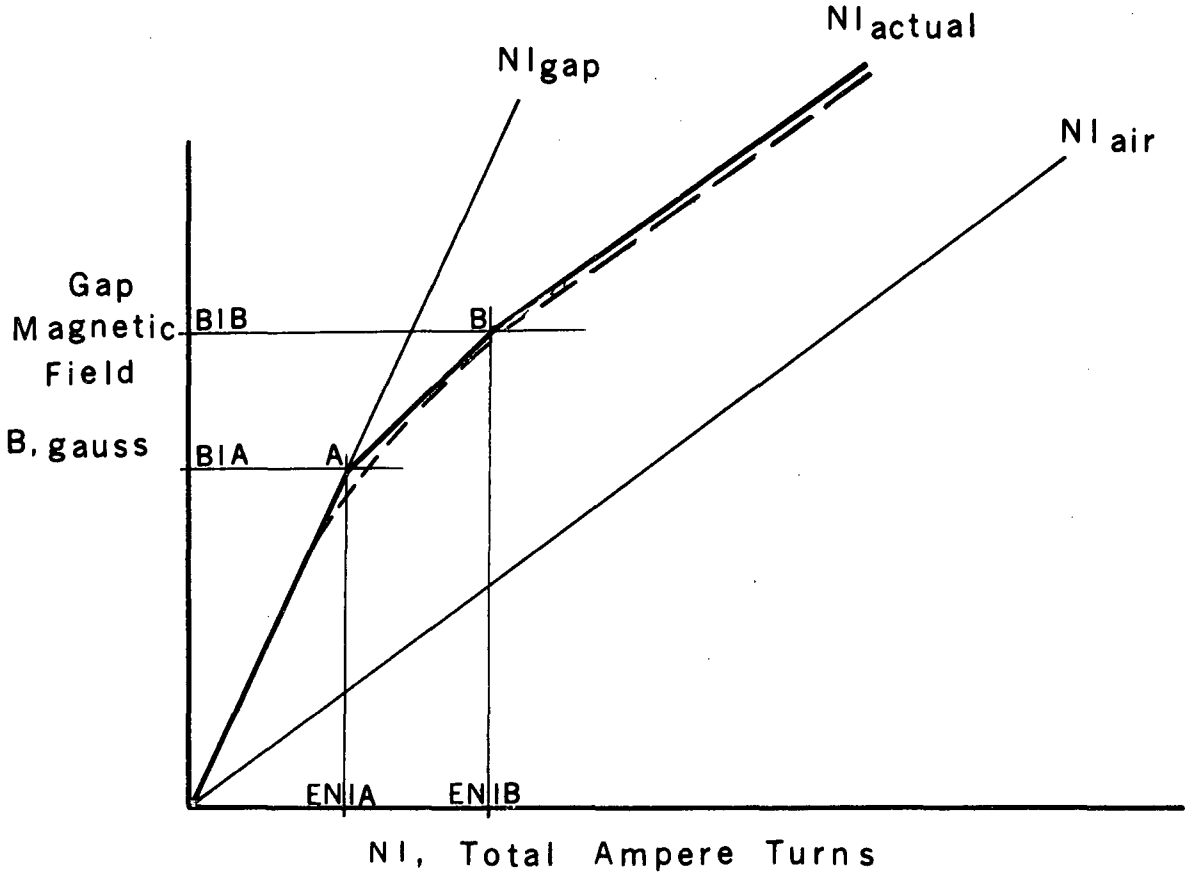

Figure 4

Ampere Turns vs. Gap Magnetic Field

Saturation Effect of Iron Yoke

MUB-7635

Fig. 4

Figure 5
Total Cost vs. Coil Width
Gap Field, 10 — 70 kg

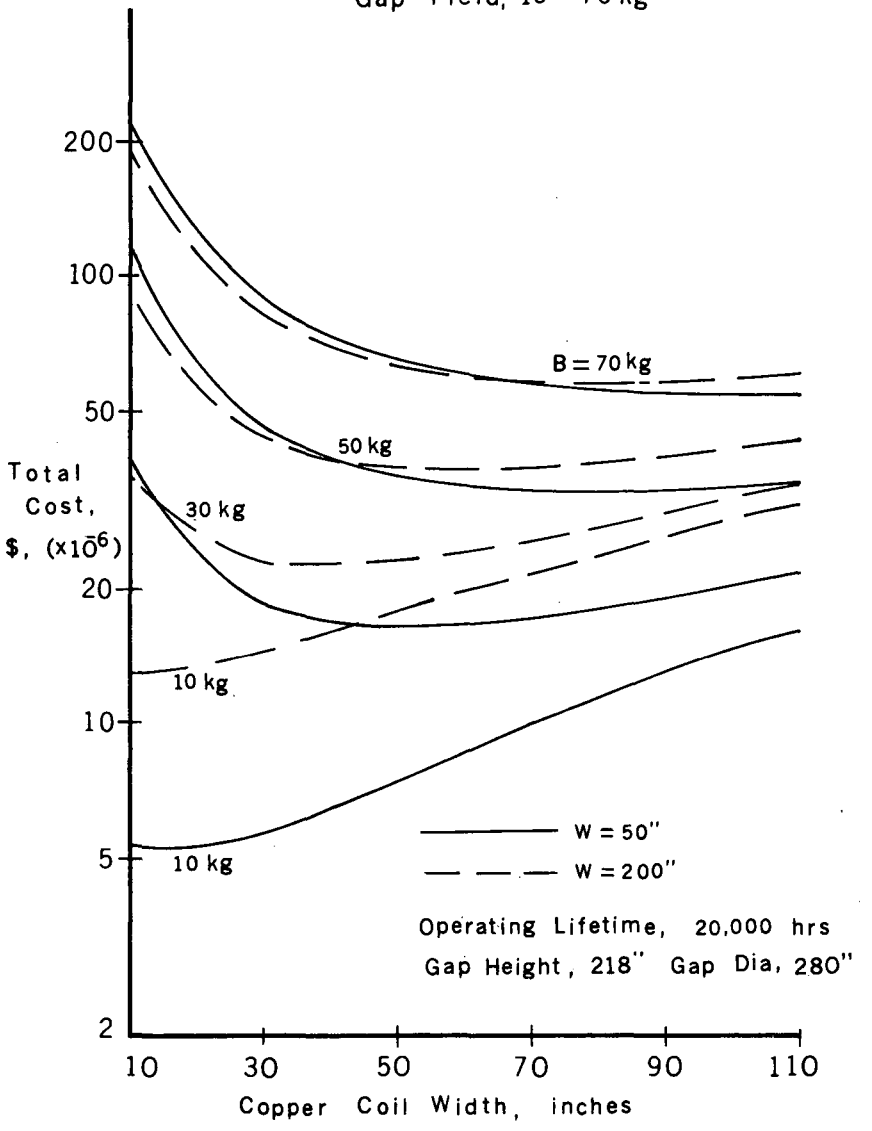

MUB-7636

Fig. 5

Figure 6

Total Cost vs. Gap Field
Optimum Coil Width

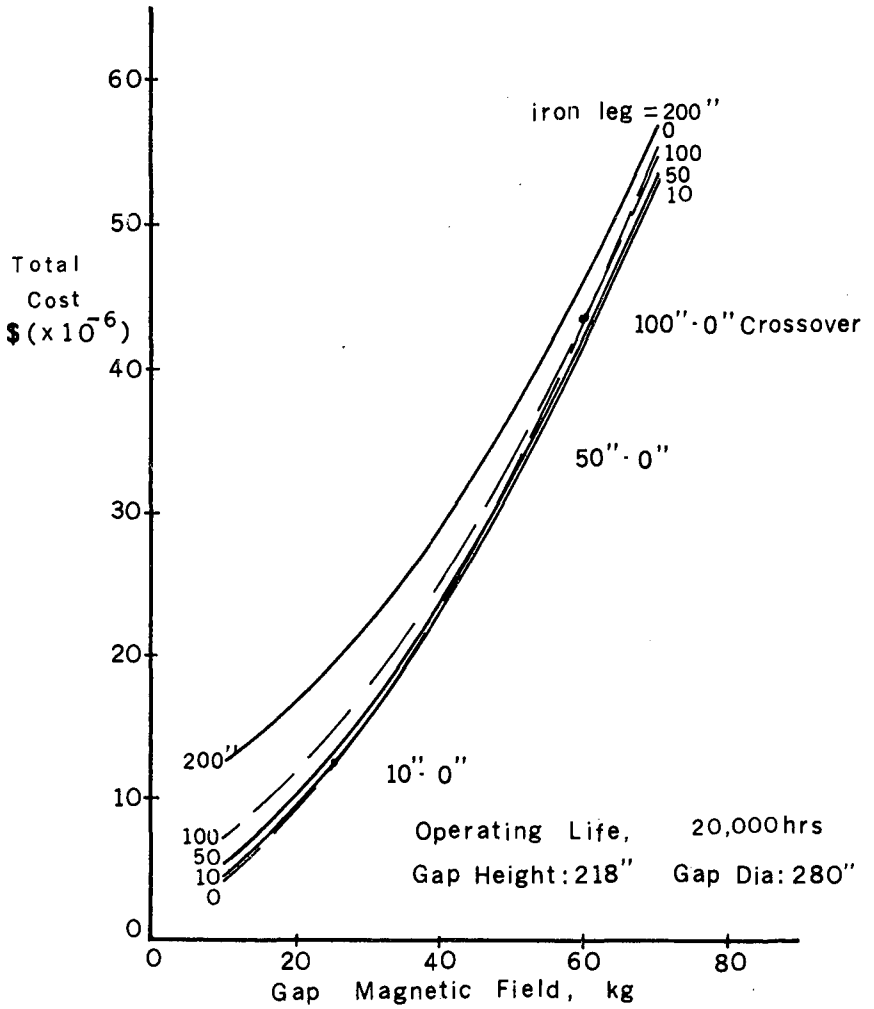

MUB-7637

Fig. 6

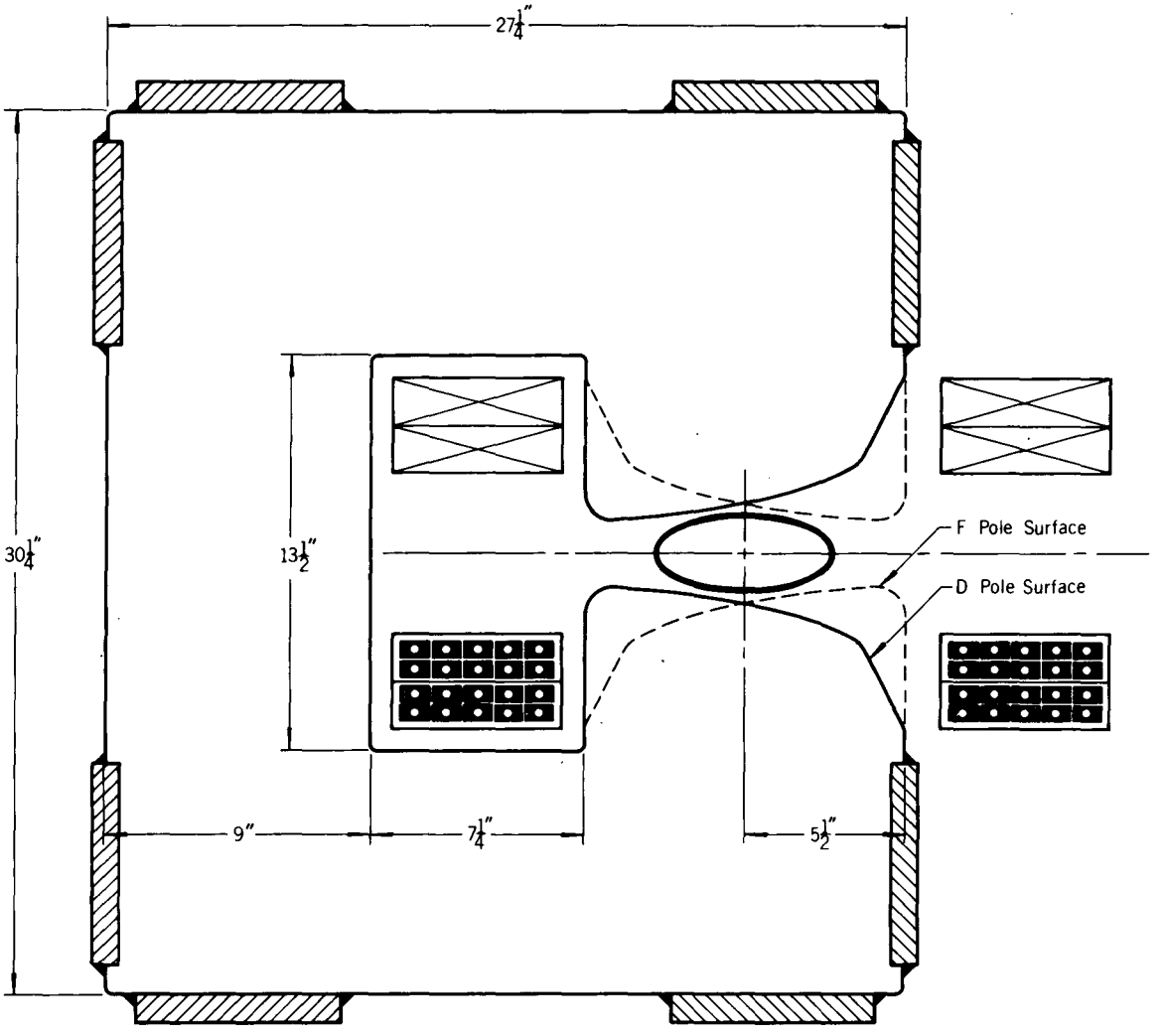

Injector Synchrotron
Gradient-Magnet Cross Section
Figure 7

MUB-7656

Fig. 7

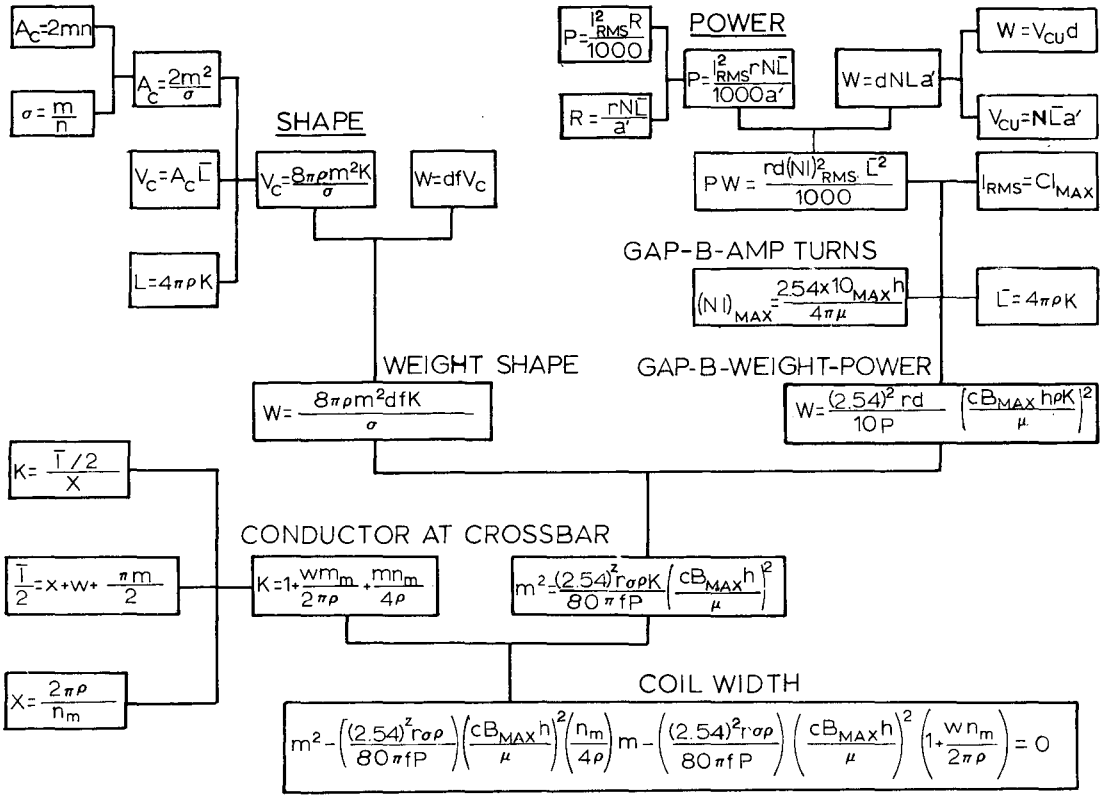

Fig. 9

MUB-7684

Fig. 8

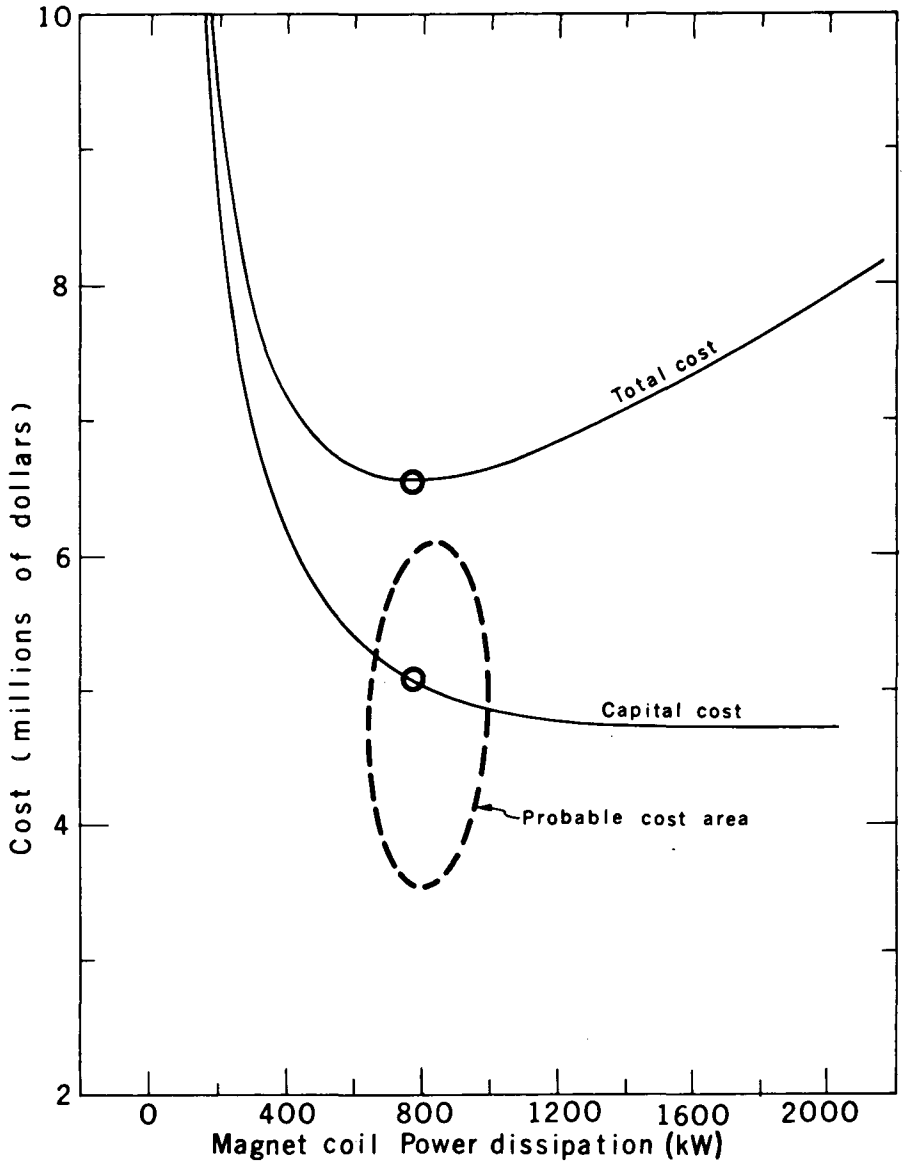

Injector Synchrotron Magnet System
Cost Optimization
Figure 9

MUB-7655

Fig. 9

This report was prepared as an account of Government sponsored work. Neither the United States, nor the Commission, nor any person acting on behalf of the Commission:

A. Makes any warranty or representation, expressed or implied, with respect to the accuracy, completeness, or usefulness of the information contained in this report, or that the use of any information, apparatus, method, or process disclosed in this report may not infringe privately owned rights; or

B. Assumes any liabilities with respect to the use of, or for damages resulting from the use of any information, apparatus, method, or process disclosed in this report.

As used in the above, "person acting on behalf of the Commission" includes any employee or contractor of the Commission, or employee of such contractor, to the extent that such employee or contractor of the Commission, or employee of such contractor prepares, disseminates, or provides access to, any information pursuant to his employment or contract with the Commission, or his employment with such contractor.