UCRL-1638

UNCLASSIFIED

UNIVERSITY OF CALIFORNIA — BERKELEY

TWO-WEEK LOAN COPY

*This is a Library Circulating Copy which may be borrowed for two weeks. For a personal retention copy, call Tech. Info. Division, Ext. 5545*

# RADIATION LABORATORY

## DISCLAIMER

This document was prepared as an account of work sponsored by the United States Government. While this document is believed to contain correct information, neither the United States Government nor any agency thereof, nor the Regents of the University of California, nor any of their employees, makes any warranty, express or implied, or assumes any legal responsibility for the accuracy, completeness, or usefulness of any information, apparatus, product, or process disclosed, or represents that its use would not infringe privately owned rights. Reference herein to any specific commercial product, process, or service by its trade name, trademark, manufacturer, or otherwise, does not necessarily constitute or imply its endorsement, recommendation, or favoring by the United States Government or any agency thereof, or the Regents of the University of California. The views and opinions of authors expressed herein do not necessarily state or reflect those of the United States Government or any agency thereof or the Regents of the University of California.

UCRL-1638
Unclassified-Chemistry Distribution

UNIVERSITY OF CALIFORNIA

Radiation Laboratory

Contract No. W-7405-eng-48

# SOME PROBLEMS IN THE CHEMISTRY OF GERMANIUM

W. L. Jolly

(Thesis)

January, 1952

Berkeley, California

TABLE OF CONTENTS


| Section | Subject | Page |
|---|---|---|
| I | Introduction | 1 |
| II | The Heat of Oxidation of Germanous Iodide | 2 |
| III | The Disproportionation of Germanous Iodide | 15 |
| IV | The GeO(hydrous) - $GeO_2$ Electrode | 33 |
| V | The Solubility of Germanous Hydroxide | 46 |
| VI | The Vapor Pressure, Heat of Formation and X-ray Pattern of Germanous Oxide | 51 |
| VII | HCl - Oxide Equilibria | 63 |
| VIII | The Heat of Oxidation of Germanium | 70 |
| IX | Absorption and Raman Spectra of $GeI_4$ | 75 |
| X | Summary and Conclusions | 79 |

TABLES


| Number | Subject | Page |
|---|---|---|
| 1 | Entropies and Heat Capacities of $GeX_4$ at 298°K..... | 17 |
| 2 | Vapor Pressure of $GeI_4(s)$..... | 21 |
| 3 | Vapor Pressures over Ge + $GeI_2$..... | 26 |
| 4 | The Disproportionation of $GeI_2(s)$..... | 28 |
| 5 | Values of $\Delta H_0^\circ$ for the Disproportionation of $GeI_2(s)$. | 30 |
| 6 | Cell Voltages..... | 36 |
| 7 | Cell Voltages..... | 38 |
| 8 | Cell Voltages..... | 39 |
| 9 | Cell Voltages..... | 41 |
| 10 | Cell Voltages..... | 44 |
| 11 | The Solubility of Brown Germanous Hydroxide in Water | 48 |
| 12 | The Solubility of Brown Germanous Hydroxide in Hydrochloric Acid Solutions..... | 48 |
| 13 | The Solubility of Brown Germanous Hydroxide in Various Chloride-Perchlorate Solutions..... | 50 |
| 14 | The Vapor Pressure of Mercury..... | 54 |
| 15 | The Vapor Pressure of GeO..... | 56 |
| 16 | Thermodynamic Functions for the Vaporization of GeO. | 58a |
| 17 | X-ray Examination of GeO..... | 61 |
| 18 | Pressure-Temperature Data..... | 65 |
| 19 | Pressure-Temperature Data..... | 67 |
| 20 | Pressure-Temperature Data..... | 68 |
| 21 | Calorimetric Experiments..... | 73 |
| 22 | Extinction Coefficients of $GeI_4$..... | 76 |
| 23 | Thermodynamic Functions at 298.16°K..... | 84 |

FIGURES


| Number | Subject | Page |
|---|---|---|
| 1 | Vibration Frequencies of Silicon Tetrahalides..... | 16 |
| 2 | Flow-Method Vapor Pressure Apparatus..... | 19 |
| 3 | The Sublimation of $GeI_4$..... | 23 |
| 4 | The Disproportionation of $GeI_2$..... | 31 |
| 5 | Electrolytic Cells..... | 34 |
| 6 | Knudsen Effusion Cell and Apparatus..... | 53 |
| 7 | The Vapor Pressure of GeO..... | 57 |
| 8 | Apparatus for Studying Static Equilibria between HCl gas and Germanium Oxides..... | 64 |

# I. INTRODUCTION

The chemical literature contains a large amount of descriptive material on germanium chemistry, but there is a paucity of quantitative data. The purpose of this investigation was to obtain some quantitative relationships among various inorganic compounds and, through the application of simple thermodynamics, to evaluate the free energies of typical compounds in the +2 and +4 oxidation states.

This thesis is divided into several sections; in each of these particular compounds and experimental techniques are discussed. In the summary, the various data obtained are correlated in an attempt to present a systematic scheme of heats, free energies and entropies.

## II. THE HEAT OF OXIDATION OF GERMANOUS IODIDE

Germanous iodide, $GeI_2$, was chosen as a reference compound of germanium in the +2 oxidation state because it is easily prepared and stable in dry air. This section deals only with the experimentation designed to measure the heat of oxidation of $GeI_2(s)$ to germanic acid in aqueous solution. By estimating entropies it is then possible to obtain the oxidation potential for the couple:

$$GeI_2(s) + 3H_2O = H_2GeO_3 + 4H^+ + 2I^- + 2e^-.$$

Several attempts were made to oxidize solid $GeI_2$ to germanic acid both in aqueous solution and in perchloric acid solutions, but even with use of very high stirring speeds in the calorimeter, it was found impossible to obtain complete reaction in a reasonable time. The reason for this lies in the fact that germanous iodide hydrolyzes to the hydrous oxide, which is relatively insoluble in non-complexing aqueous solutions. However, in two runs practically complete solution and reaction of the $GeI_2$ was effected, and the residual solutions were analyzed in order to determine the extent of reaction. These two runs constitute one set of data toward the evaluation of the desired heat. A second set of data resulted from a more roundabout approach, namely one involving the oxidation of $GeI_2$ in 3.88 molar hydrochloric acid. In order to get the desired heat, it was necessary to add four different experimental heats. These two experimental approaches are presented separately in this section, even though they both lead to the same final result.

## Experimental Procedures

### Preparation of Germanous Iodide

A modification of the method of Powell and Brewer[8] was used. In a typical preparation, 6.0 g. of germanic oxide was dissolved in about 30 ml. conc. sodium hydroxide solution. Then 6 M HCl was added until the initial precipitate of $GeO_2$ just redissolved. With cooling, 60 ml. conc. HCl and 45 ml. 50% $H_3PO_2$ were added and the solution heated under carbon dioxide for 5-6 hours at 100°C. The resulting solution was cooled, and germanous hydroxide precipitated by addition of aqueous ammonia. The hydroxide was filtered off under nitrogen and the moist material added to about 45 ml. iodine-free hydriodic acid (constant boiling). The suspension was heated with stirring at 80° for half an hour, cooled, and the resulting crystals of $GeI_2$ filtered off and washed with 50 ml. of a 30% aqueous solution of constant boiling hydriodic acid. The germanous iodide was dried and freed of $GeI_4$ by heating at 100° in vacuum overnight. The dry material was stored in a vacuum desiccator over $Mg(ClO_4)_2$.

### Chemical Analysis of Germanous Iodide

An appropriate sample of $GeI_2$ (ca. 0.3 g.) was weighed out and dissolved in 20 ml. 6 M HCl in an atmosphere of carbon dioxide. Then 30 ml. water were added and the solution titrated with 0.1 N $KMnO_4$ to the first appearance of iodine color (the titration being carried out under $CO_2$). This endpoint permitted a calculation of the germanium (II) content. Seventy ml. conc. HCl along with 5 ml. chloroform were then added and the titration continued. (Vigorous stirring was

necessary). The disappearance of the iodine color from the chloroform layer indicated the completion of the oxidation of iodide to $ICl_2^-$. From this one titration, it was thus possible to determine both germanium and iodide. Typical results follow:

| | | | |
|---|---|---|---|
| Ge (II); | found: 21.77%, 21.65%; | theory: | 22.24% |
| $I^-$ ; | found: 77.22%, 77.84%; | theory: | 77.76% |

## X-ray Analysis of Germanous Iodide

The X-ray diffraction patterns of several samples of freshly prepared $GeI_2$, including one sample of sublimed $GeI_2$, were obtained. The results were all in close agreement, and showed that $GeI_2$ has the $CdI_2$ type structure. The lattice constants a = 4.249 ± .004 Å and c = 6.833 ± .007 Å were measured. Now Powell and Brewer[8] have found much lower lattice constants for this compound, viz., a = 4.14 and c = 6.80 (corrected figures); but none of our samples gave results anywhere near their results. Our values for the lattice constants lead to a Ge - I distance of 2.99 Å, which is the same as the Cd - I distance in $CdI_2$. Credit is due Mrs. Carol H. Dauben for analyzing the diffraction patterns.

## Preparation of Germanic Iodide

The method of Foster and Williston[2] was used for preparing $GeI_4$. The product was purified by recrystallization from chloroform followed by air drying at 80°C. One preparation was analyzed by titrating the iodide with standard permanganate.

Iodide found: 87.9%, 86.8%

Theoretical iodide: 87.55%

Probably the purified material was better than 99% pure.

Preparation of Standard Solutions

The potassium permanganate solutions and the triiodide solutions were both standardized against standard arsenite solutions. The standard arsenite solutions were prepared from analytical reagent arsenious oxide. All standard acid solutions were standardized against solutions of sodium hydroxide which were in turn standardized against potassium acid phthalate.

Calorimeter

The calorimeter used in these measurements has been described previously[1,5]. All heats were measured at 25.0 ± 1.0°C. and are expressed in terms of the defined calorie[7].

Whenever a calorimetric run was carried out using a solution containing some easily oxidized species, the solution was well saturated with some inert gas before proceeding with the run. In some cases, very slowly soluble materials were dissolved, and in such cases extra stirring blades were attached near the bottom of the central stirring shaft.

# RESULTS

## The Direct Method

In these experiments, the oxidizing solution used in the calorimeter was prepared by mixing measured amounts of a standard triiodide solution with 0.200 M $HClO_4$. An excess of 0.1009 N triiodide solution was pipetted into a one liter volumetric flask and diluted to volume with 0.200 M $HClO_4$. This solution was then poured into the calorimetric dewar while flushing with carbon dioxide. After assembling the calorimeter and immediately before proceeding with the run, carbon dioxide was bubbled through the solution. The bulb containing the germanous iodide was attached to the end of a rod which had special stirring blades on it. The sample was introduced by plunging the rod down and breaking the bulb on the bottom of the dewar. After completion of the run, the calorimeter was immediately opened and 100 ml. aliquots of the residual solution were titrated with standard thiosulfate solution.

The germanous iodide used in these runs was about 96% pure. Approximately one hour was allowed for the samples to react, but in both runs a few grains of undissolved material remained. For these reasons, the moles of reacted $GeI_2$ calculated on the basis of the final titrations were lower than that calculated on the basis of the sample weighings. The details for the runs are given below:

| | Run 49 | Run 50 |
|---|---|---|
| Ml. 0.1009 N $I_3^-$ | 200 | 150 |
| Moles $GeI_2$ weighed out, assuming 100% purity | .00826 | .00721 |

| | Run 49 | Run 50 |
|---|---|---|
| Moles $GeI_2$ reacted, on basis of titration | .00780 | .00671 |
| Heat evolved (cal.) | 201.98 | 174.64 |
| $\Delta H$ (kcal./mole) | -25.9 | -26.0 |

From considerations of temperature drift uncertainties and analytical inaccuracies, we judge the probable error of each of these measurements to be ±4% and therefore give

$$\Delta H = -26.0 \pm 1.0 \text{ kcal. for}$$

$$3H_2O + GeI_2(s) + I_3^- = H_2GeO_3 + 4H^+ + 5I^-$$

The Indirect Method

The most convenient way of calorimetrically oxidizing $GeI_2$ rapidly and completely to a +4 germanium species was found to be the oxidation in approximately 4 molar hydrochloric acid. $GeI_2$ is quite soluble in 4M HCl (perhaps germano-chloroform, $GeHCl_3$, forms) and may be oxidized in this medium to form a soluble +4 germanium species.

Iodine was chosen as the best oxidizing agent for two reasons. First, iodine was a convenient oxidizing agent to have in excess because it cannot oxidize iodide. (It was necessary to employ an excess of oxidizing agent because of the ease of oxidation of germanium (II) solutions by traces of air). Second, since germanic iodide was used as a reference +4 germanium compound, the use of iodine as an oxidizing agent avoids the necessity of measuring the heats of solution of several extra compounds in 3.88 M HCl.

The main disadvantage of using a complexing solution such as

3.88 M HCl as a reaction medium is that the heats of formation of all the dissolved species are unknown and extra calorimetric experiments are required to relate the heats to infinite dilution in water.

The formula for the +4 germanium compound which exists in 3.88 M HCl is unknown; perhaps it is $H_2GeO_3$ or $GeCl_6^{=}$. Fortunately, it makes no difference what arbitrary formula we use in our equations. In order to relate the heat of formation of this +4 species to that for $H_2GeO_3(aq)$, it is necessary to know the heats of solution of some +4 compound in both water and 3.88 M HCl. First of all $GeCl_4$ was tried. The heat of solution of $GeCl_4$ in water was measured by Roth and Schwartz[10] (one successful experiment) who recorded that the reaction is poor for calorimetry because the $GeO_2$ formed in the initial hydrolysis is very slowly soluble. In our attempts to measure this heat the same difficulty was encountered. Oddly enough, this difficulty is even more important when $GeCl_4$ is dissolved in 3.88 M HCl. A very slowly soluble white product (an oxide or oxychloride) forms when liquid $GeCl_4$ is added to 3.88 M HCl.

Germanium tetra-iodide was finally decided upon as a reference +4 compound. Again, very slow solution was found in 3.88 M HCl, but not nearly as slow as was the case with $GeCl_4$.

The following is an outline of the various reactions whose heats were measured in order to finally obtain the heat desired.

(1) $GeI_2(s) + I_2(HCl \text{ and } KI) = GeI_4\ (HCl \text{ and } KI)$

(2) $GeI_4(s) = GeI_4\ (HCl \text{ and } KI)$

(3) $I_2(s) = I_2\ (HCl \text{ and } KI)$

(4) $GeI_4(s) + 3H_2O = H_2GeO_3(aq) + 4H^+ + 4I^-$

The sum of equations (1), (3) and (4) minus (2) gives equation (5).

$$(5)\ GeI_2(s) + I_2(s) + 3H_2O = H_2GeO_3 + 4H^+ + 4I^-.$$

By adding the following to (5)

$$(6)\ I_3^- = I_2(s) + I^-$$

we obtain

$$(7)\ 3H_2O + GeI_2(s) + I_3^- = H_2GeO_3 + 4H^+ + 5I^-.$$

Reaction (1)

Four runs were carried out: two using one preparation of $GeI_2$ and 3.88 M HCl, and two using entirely different preparations. In each run, a bulb containing the germanous iodide was broken into a solution of 3.88 M HCl containing about 60 g. of potassium iodide per liter and an excess of iodine. In runs 7 and 8 the $GeI_2$ used analyzed 99% pure and in runs 35 and 36 the $GeI_2$ analyzed 96% pure.

| Run | Grams 3.88 M HCl | Grams KI | Grams $I_2$ | Moles $GeI_2$ | Heat Evolved(cal.) | ΔH (kcal.mole) |
|---|---|---|---|---|---|---|
| 7 | 1008 | 60.0 | 0.97 | .002778 | 52.74 | -18.98 |
| 8 | 1003 | 57.0 | 0.48 | .001268 | 24.47 | -19.30 |
| 35 | 1070 | 80.4 | 1.24 | .003252 | 61.91 | -19.04 |
| 36 | 1019 | 60.0 | 0.74 | .002406 | 45.53 | -18.92 |

Average ΔH = -19.06 kcal./mole

Instead of trying to guess the impurities present in the $GeI_2$ samples and to estimate the corrections necessary to bring the heat up to that for 100% $GeI_2$, we shall merely assume a possible error of as much as 0.4 kcal./mole and take

$$\Delta H = -19.06 \pm 0.4 \text{ kcal./mole for}$$

$$(1)\ GeI_2(s) + I_2(HCl \text{ and } KI) = GeI_4(HCl \text{ and } KI)$$

Reaction (2)

Reaction (2) involves the dissolution of solid germanic iodide in 3.88 M HCl containing about 6% potassium iodide. Mistakenly, three runs were carried out without the potassium iodide; that is, $GeI_4$ was dissolved in 3.88 M HCl alone. The rate of solution was quite slow, but complete solution generally occurred after stirring for 30 minutes. The results of these runs are shown below.

| Run | Grams 3.88 M HCl | Moles $GeI_4$ | Heat evolved(cal.) | ΔH (kcal./mole) |
|---|---|---|---|---|
| 31 | 1004 | .003796 | 7.66 | -2.02 |
| 32 | 1007 | .002657 | 4.03 | -1.52 |
| 33 | 1004 | .003473 | 5.905 | -1.70 |
| | | | Average ΔH = | -1.75 |

When runs were attempted using HCl containing potassium iodide, the rate of solution was found to be prohibitively slow. In the best of three attempts, a very high stirring speed was used in conjunction with extra stirring blades. Even then, only about 90% of the $GeI_4$ dissolved after 45 minutes. The result of this run is very low in precision, but the details are nevertheless given.

Run 48

| | |
|---|---|
| Moles $GeI_4$ | .001806 |
| Grams 3.88 M HCl | 1008 |
| Grams KI | 60.0 |
| Heat evolved (cal.) | 8.4 |
| ΔH (kcal./mole) | -4.7 |

The value -4.7 kcal./mole probably only gives the order of magnitude. Assuming that the inclusion of KI does not change the heat very much from that measured in runs 31, 32, and 33, we shall take

$\Delta H = -3.0 \pm 2.0$ kcal./mole for

(2) $GeI_4(s) = GeI_4$ (HCl and KI)

Reaction (3)

In a rough preliminary run it was found that the heat of this reaction is very small, and hence the iodine was not weighed out into the bulb with great precision. (A semi-analytical balance rather than an analytical balance was used.) The potassium iodide was dissolved in 3.88 M HCl and diluted with the same acid to one liter. This solution was then used in the calorimeter. The iodine used was Baker and Adamson Resublimed Analytical Reagent Iodine.

| Run | Grams KI | Moles $I_2$ | Heat evolved (cal.) | $\Delta H$ (kcal./mole) |
|---|---|---|---|---|
| 44 | 60.0 | .0116 | -7.58 | +0.65 |
| 45 | 60.0 | .0220 | -13.82 | +0.63 |

We shall take $\Delta H = +0.64 \pm 0.05$ kcal./mole for

(3) $I_2(s) = I_2$ (HCl and KI)

Reaction (4)

The bulb containing the $GeI_4$ was attached to a hollow shaft which not only had extra stirring blades on the end, but also had a hole near the bottom which permitted bubbling inert gas through the solution in the calorimeter. In runs 28 and 29 the water in the calorimeter was degassed with $CO_2$; in run 30, with argon.

| Run | Grams water | Moles $GeI_4$ | Heat evolved (cal.) | $\Delta H$(kcal./mole) |
|---|---|---|---|---|
| 28 | 980 | .004459 | 41.78 | -9.37 |
| 29 | 1016 | .004480 | 42.39 | -9.46 |
| 30 | 1016 | .003788 | 35.38 | -9.34 |

With the aid of the Debye-Hückel equation, these heats were extrapolated to infinite dilution:

| Run | $\Delta H^\circ$ |
|---|---|
| 28 | -9.63 |
| 29 | -9.72 |
| 30 | -9.57 |

We shall take $\Delta H^\circ = -9.64 \pm 0.10$ kcal./mole for

$$(4) \quad GeI_4(s) + 3H_2O = H_2GeO_3 + 4H^+ + 4I^-.$$

By adding together the heats for reactions

| | |
|---|---|
| (1) | -19.06 ± 0.4 kcal./mole |
| -(2) | + 3.0 ± 2.0 |
| (3) | + 0.64 ± 0.05 |
| (4) | - 9.64 ± 0.1 |

We obtain for (5): -25.1 ± 2.0 kcal./mole

By adding $\Delta H = -1.0$ kcal./mole[7] for

$$(6) \quad I_3^- = I_2(s) + I^-$$

we obtain $\Delta H = -26.1 \pm 2.0$ kcal./mole for reaction (7).

$$(7) \quad 3H_2O + GeI_2(s) + I_3^- = H_2GeO_3 + 4H^+ + 5I^-.$$

## CONCLUSIONS

Two experimentally independent methods have given essentially the same value for the heat of reaction (7), and we shall take $\Delta H = -26.0 \pm 1.0$ kcal./mole.

Pugh[9], Laubengayer and Morton[6], Schwarz and Huf[11] and Winkler[12] measured the solubility of $GeO_2$ at various temperatures. From the temperature coefficient of the solubility, we can obtain an approximate value for the heat of solution of the soluble form of $GeO_2$. It appears that the two low temperature measurements of Schwarz and Huf give solubilities which are too high. For the process $H_2O + GeO_2(ppt.) = H_2GeO_3(aq)$ we calculate $\Delta H^\circ = +3.3 \pm 1.0$ kcal./mole. Pugh gave the solubility of $GeO_2$ in water as 4.47 g. per liter at 25°, while Laubengayer and Morton reported 4.53 g. Taking an average of 4.50 g. per liter, we find $\Delta F^\circ = +1.86$ kcal./mole for the solution of $GeO_2$. Combining this with the above heat yields $\Delta S^\circ = +4.7 \pm 3.4$ cal./deg. By estimating $S^\circ = 13$ cal./deg. for $GeO_2$ (using Latimer's tables[4]), we calculate the entropy of $H_2GeO_3(aq)$ to be $34.5 \pm 4.0$ cal./deg.

For the oxidation of $GeI_2$ to $GeO_2$ by triiodide,

$$2H_2O + GeI_2(s) + I_3^- = GeO_2(s) + 4H^+ + 5I^-,$$

we find $\Delta H^\circ = -29.3 \pm 1.4$ kcal./mole.

REFERENCES

1. Fontana, B. J. National Nuclear Energy Series, IV-19B, McGraw-Hill, N. Y., 1950, p. 321.

2. Foster, L. S. and Williston, A. F., Inorganic Syntheses 2, 112 (1946).

3. Latimer, W. M., "Oxidation Potentials", Prentice-Hall, N. Y., 1938, p. 57.

4. Latimer, W. M., J. Am. Chem. Soc. 73, 1480 (1951).

5. Latimer, W. M. and Zimmerman, H. W., J. Am. Chem. Soc. 61, 1550 (1939).

6. Laubengayer, A. W. and Morton, D. S., J. Am. Chem. Soc. 54, 2318 (1932).

7. National Bureau of Standards, Selected Values of Chemical Thermodynamic Properties, Washington, D. C.

8. Powell, H. M. and Brewer, F. M., J. Chem. Soc. 1938, 197.

9. Pugh, W., J. Chem. Soc. 1929, 1537.

10. Roth, W. A. and Schwartz, O., Z. physik. Chem. 134, 466 (1927).

11. Schwarz, R. and Huf. E., Z. anorg. Chem. 203, 195 (1931).

12. Winkler, C., J. pr. Chem. [2] 34, 213 (1886).

## III. THE DISPROPORTIONATION OF GERMANOUS IODIDE

Brewer and Dennis[1,2] have observed that when germanous iodide is heated, it decomposes into germanic iodide and germanium metal. This section principally deals with a study of this disproportionation; however certain questions arose incidental to this main study, and these will be discussed first, inasmuch as an intelligent discussion of the $GeI_2$ disproportionation is dependent on them.

### The Entropies and Heat Capacities of $GeCl_4(g)$, $GeBr_4(g)$ and $GeI_4(g)$

Sufficient experimental data exist for germanium tetrachloride and germanium tetrabromide to calculate their entropies on the basis of molecular constants. Both the vibrational energies and the interatomic distances are known. Neu and Gwinn[10] measured the fundamental frequencies for $GeCl_4$: $\nu_1 = 397$, $\nu_2 = 132$, $\nu_3 = 452$, $\nu_4 = 171$. Herzberg[4] gives for $GeBr_4$: $\nu_1 = 234$, $\nu_2 = 78$, $\nu_3 = 328$, $\nu_4 = 111$ (all in $cm.^{-1}$). It was necessary to estimate the frequencies for $GeI_4$. Hildebrand[5] has shown that when $\nu_1$ and $\nu_2$ (for various tetrahalides) are plotted against interatomic distance, smooth curves are obtained, which are roughly straight lines. The points on each curve are characterized by the same halogen and mode of vibration, each point on a given curve representing a tetrahalide with a different central atom. It was hoped that an extension of this idea might aid in estimating the fundamental frequencies for germanium tetraiodide. Figure 1 shows a plot of all four vibrational frequencies of $SiF_4$, $SiCl_4$ and $SiBr_4$ against the Si - X distance. It is apparent that the points for a given mode of vibration are approximately on a

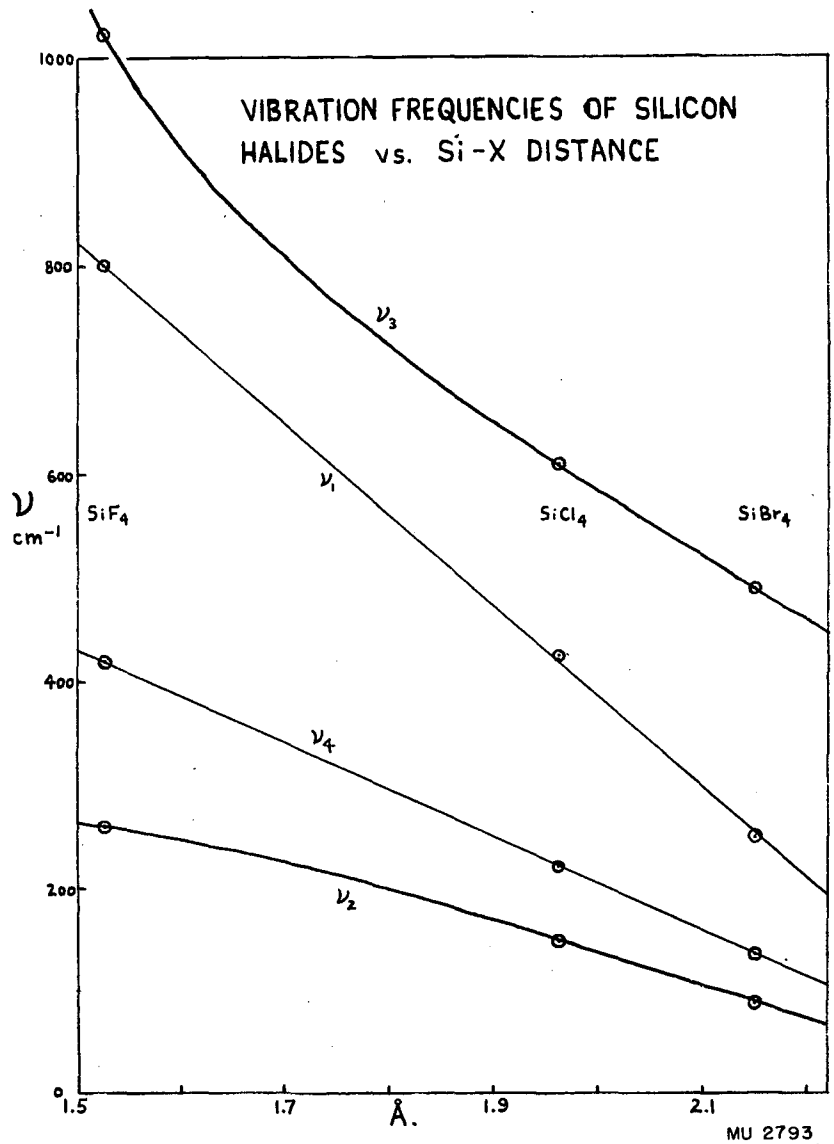
VIBRATION FREQUENCIES OF SILICON HALIDES vs. Si-X DISTANCE
1000
800
600
400
200
0
ν
cm⁻¹
SiF4
SiCl4
SiBr4
ν3
ν1
ν4
ν2
1.5
1.7
1.9
2.1
Å.
MU 2793

Fig. 1

straight line. It is suspected that the deviations from linearity would be smaller if the values for a tetrachloride, tetrabromide and tetraiodide were plotted. (The vibration frequencies were taken from Herzberg[4] and the interatomic distances from Pauling and Brockway[11] and Kelley[7]).

Assuming that straight lines would well represent the values for the germanium tetrahalides, the frequencies for $GeI_4$ were extrapolated from those of $GeCl_4$ and $GeBr_4$. Rouault[12] found the Ge-Br distance in $GeBr_4$ to be 2.34 ± .04 Å. whereas Lister and Sutton[9] found it to be 2.29 ± .02 Å. We shall take an average of 2.31 Å. The last named investigators found the Ge-I distance in $GeI_4$ to be 2.50 ± .03 Å, and Pauling and Brockway[11] found the Ge-Cl distance in $GeCl_4$ to be 2.070 Å. The extrapolated vibration frequencies for $GeI_4$ are $\nu_1 = 104$, $\nu_2 = 36$, $\nu_3 = 230$, $\nu_4 = 64$. The calculated moments of inertia for the germanium tetrahalides are:

$$GeCl_4: \quad I = 673 \times 10^{-40}$$

$$GeBr_4: \quad I = 1890 \times 10^{-40}$$

$$GeI_4: \quad I = 3510 \times 10^{-40}$$

Using the methods outlined by Kelley[7] and tables of Einstein-functions[6], the heat capacities at constant pressure and standard entropies of the germanium tetrahalides were calculated. The results are shown in Table 1.

Table 1

Entropies and Heat Capacities of $GeX_4(g)$ at 298°K.

| | $C^\circ_{p298}$ | $S^\circ_{298}$ |
|---|---|---|
| $GeCl_4$ | 23.0 | 83.05 ± 0.5 |
| $GeBr_4$ | 24.4 | 94.78 ± 0.5 |
| $GeI_4$ | 25.2 | 107.4 ± 2.0 |

## The Vapor Pressure of $GeI_4(s)$

Germanic iodide readily sublimes at temperatures in the neighborhood of 100°C., and so its vapor pressure can be accurately measured with relative ease. A saturated vapor flow-method was employed. Germanic iodide crystals were placed in a horizontal glass tube which was heated to a constant temperature while a steady stream of argon was passed through the tube. By assuming that the gas was saturated with $GeI_4$ vapor in passing through the tube, the amount of $GeI_4$ which was condensed out on the cooler portions of the tubing was taken as a measure of the vapor pressure.

## Experimental Procedure

The preparation and analysis of germanic iodide was discussed in section II. Two methods for heating the tube containing the $GeI_4$ were used. In two low temperature experiments the tubing was heated by a vapor-jacket similar to that used in Albderhalden driers. The vapors of boiling benzene and of boiling water were used to maintain the temperatures 79.8° and 99.8°, respectively. Higher temperatures were maintained by heating the tubing in a horizontal tube furnace. A "Celectray" electronic controller (C. J. Tagliabue Mfg. Co.) was used in conjunction with a chromel-alumel thermocouple to keep the temperature of the furnace constant to ±3°C. The thermocouple was calibrated at the boiling point of water and the melting points of ice, tin and cadmium. A sheath of nickel foil was wrapped around the tubing where the $GeI_4$ was contained. Both the vapor jacket and electric furnace outfits are pictured in Figure 2.

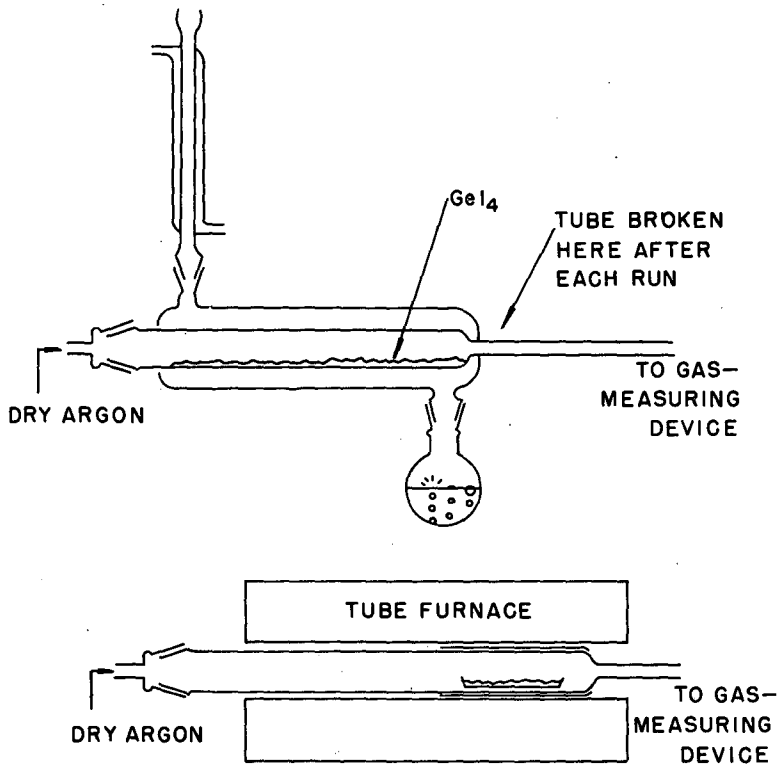


FLOW-METHOD VAPOR PRESSURE EXPERIMENTS

MU2790

Fig. 2

Linde argon was freed of oxygen and water by passing the gas consecutively through hot copper turnings and magnesium perchlorate. The total volume of gas passed in a run was determined by collecting the gas over water at the end of the flow system. (It was necessary to correct for the vapor pressure of water). The runs were timed with an electric timer; runs were started by suddenly bringing the temperature up to the desired point and ended by suddenly removing the heat.

Quantitative condensation of the volatilized $GeI_4$ was found to occur in the cool, narrow tubing immediately outside the hot zone. This narrow tubing was cracked off after each run and the sublimed $GeI_4$ was dissolved. The iodide was titrated to $ICl_2^-$ with a standard permanganate solution. Details of the runs are given in Table 2.

Runs A, B and C were carried out at the same temperature, but with different flow rates. It can be seen that relatively good vapor saturation is attained if the flow rate is kept below about $0.7 \times 10^{-3}$ moles argon/minute. The error due to incomplete saturation in the remaining runs is probably less than 10% in the vapor pressure.

## Interpretation of Data

A very satisfactory representation of vapor pressure data is given by an equation of the form:

$$\Delta F^\circ = \Delta H_o^\circ - \Delta C_p^\circ \, T \ln T + IT$$

where $\Delta H_o^\circ$ and I are empirical constants. In this case $\Delta C_p^\circ$ is the difference in heat capacity between the gas and solid. We have

Table 2

The Vapor Pressure of $GeI_4(s)$

| Run | T°K | Time (min) | Flow rate (moles A/min.) | Total pressure in tube (atm.) | Calc. vapor pressure of $GeI_4$(atm) |
|---|---|---|---|---|---|
| A | 393 | 106 | $0.746 \times 10^{-3}$ | 0.999 | $8.2 \times 10^{-4}$ |
| B | 393 | 206 | $0.387 \times 10^{-3}$ | 1.007 | $8.4 \times 10^{-4}$ |
| C | 393 | 47 | $1.69 \times 10^{-3}$ | 1.008 | $7.1 \times 10^{-4}$ |
| | 393 | | 0 (extrap.) | | $8.7 \times 10^{-4}$ |
| D | 408 | 75 | $0.527 \times 10^{-3}$ | 1.010 | $1.79 \times 10^{-3}$ |
| E | 379 | 203 | $0.774 \times 10^{-3}$ | 1.000 | $2.9 \times 10^{-4}$ |
| F | 373.0 | 215 | $0.735 \times 10^{-3}$ | 1.002 | $2.20 \times 10^{-4}$ |
| G | 353.0 | 380 | $0.634 \times 10^{-3}$ | 0.999 | $4.7 \times 10^{-5}$ |

calculated $C_p^\circ = 25.2$ for the gas and by Kopp's rule we estimate $C_p^\circ = 33$ for the solid. Taking $\Delta C_p^\circ$ to be -8, we have plotted, in Figure 3, the "sigma function" $\Delta F^\circ/T + \Delta C_p^\circ \ln T$ versus 1/T. The slope of the straight line drawn through the points is $\Delta H_0^\circ$ = 22,500 cal./mole. The intercept on the 1/T = 0 axis is I = -90.8. Hence the free energy of sublimation of $GeI_4$ can be represented within experimental error by the equation

$$\Delta F^\circ = 22{,}500 + 8T\ln T - 90.8T.$$

The heat and entropy of sublimation can similarly be represented by

$$\Delta H^\circ = 22{,}500 - 8T$$

$$\Delta S^\circ = 82.8 - 8\ln T.$$

At 298°K., these functions have the values

$$\Delta F^\circ_{298} = 9.0 \text{ kcal./mole}$$

$$\Delta H^\circ_{298} = 20.1 \text{ kcal./mole}$$

$$\Delta S^\circ_{298} = 37 \text{ cal./deg.-mole}$$

Since the entropy of $GeI_4(g)$ is approximately 107, we calculate the entropy of solid $GeI_4$ to be 70. This is considerably higher than the value calculated using Latimer's tables[8], i.e., 63.3.

## The Vapor Pressure of $GeI_4(l)$

The melting point of $GeI_4$ is 144°C. At this point the heat of sublimation is 19,200 cal./mole and the entropy of sublimation is 34.6 cal./deg. If we estimate the entropy of melting to be 7 cal./deg. (Brewer[3] gives 11 for $SnI_4$ and 3 for $SiI_4$), then the heat of vaporization of the liquid at 144°C. is 16,300 cal./mole, and the entropy of vaporization is 27.6 cal./deg. If we estimate $\Delta C_p$ to be about -15 cal./deg. for the vaporization of liquid $GeI_4$, then rough values of

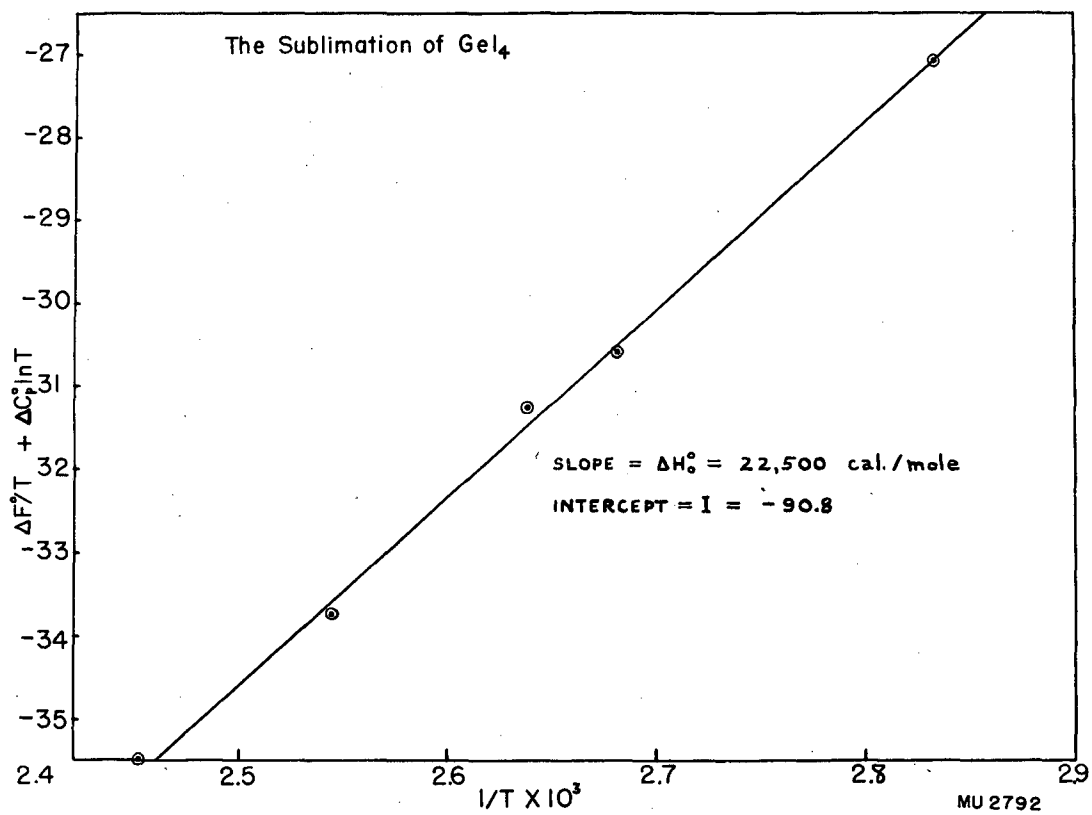
The Sublimation of $GeI_4$
SLOPE = $\Delta H_o^\circ$ = 22,500 cal./mole
INTERCEPT = I = -90.8
$\Delta F^\circ/T + \Delta C_p^\circ \ln T$
-27
-28
-29
-30
-31
-32
-33
-34
-35
2.4
2.5
2.6
2.7
2.8
2.9
$1/T \times 10^3$
MU 2792

Fig. 3

the free energy of vaporization may be given by the equation

$$\Delta F^{\circ} = 22{,}500 + 15T\ln T - 133T,$$

which gives 337°C. as the normal boiling point. The entropy of vaporization at the boiling point is calculated to be 21.9 cal./deg. Winkler[13] reported that the boiling point lies between 350° and 400°C. The boiling point calculated above may well be in error by 10 or 20 degrees.

## The Disproportionation of $GeI_2$

First an isopiestic method was tried in an attempt to study the equilibrium

$$2GeI_2(s) = Ge(s) + GeI_4(g).$$

Some $GeI_2$ was put in one end of a glass tube and the tube was sealed off under vacuum. Using two separately controlled tube furnaces, the end of the tube containing the $GeI_2$ was held at one temperature (ca. 600°K.) and the other end of the tube was held at another temperature (ca. 450°K.). The middle of the tube was always at some temperature intermediate between the temperatures of the ends. It was hoped that the $GeI_2(s)$ would be sufficiently non-volatile so that it would not distill over into the cooler end of the tube. Then the two temperatures could be regulated until $GeI_4$ just began to condense in the cooler end (or until $GeI_4$ already there just disappeared). Then it would be known that the partial pressure of $GeI_4$ over the $GeI_2$ was equal to the vapor pressure of $GeI_4$ at the temperature of the cooler end of the tube. However, at the temperatures required in order to achieve equilibrium rapidly, the $GeI_2$ sublimed over and made measurements impossible.

Then a saturated vapor flow-method was tried; an apparatus (cf. Fig. 2) similar to that used in measuring the vapor pressure of $GeI_4$ was used. $GeI_2$ crystals were placed in a glass tube through which dry argon was passed. The tube was heated by a tube furnace (same method of control as in the $GeI_4$ vapor pressure experiments) and the volume of gas passed through the tube was measured by collecting it over water.

When the tube was heated to about 270°C. reaction commenced and clouds of $GeI_4$ dust began emerging from the furnace. Some of the $GeI_4$ (approximately 50%) condensed in the cool, narrow tubing leading from the reaction chamber, but the remainder passed right into the container used for collecting the argon at the end of the line. Additional coiled glass tubing was put into the line beyond the furnace in an attempt to condense out the $GeI_4$, but even with more than a meter of tubing for condensation, some of the $GeI_4$ particles were swept through the line. Thus it was impossible to accurately determine the amount of $GeI_4$ formed by collecting that which condensed out in the cooler tubing. However two runs were carried out using this method; the results are given in Table 3. In these two runs, the condensed $GeI_4$ was dissolved out of the tubing and titrated with permanganate.

In addition to $GeI_4$ being evolved due to the disproportionation of $GeI_2$, some $GeI_2$ sublimed and quantitatively condensed out. At the end of the runs, this $GeI_2$ could be easily separated from the condensed $GeI_4$, because the $GeI_2$ condensed out in a much hotter zone (almost within the furnace) than did the $GeI_4$. This sublimed $GeI_2$ was also dissolved and titrated with permanganate. Thus these measurements yielded both the vapor pressure of $GeI_2$ and the pressure

of $GeI_4$ due to disproportionation.

Table 3

Vapor Pressures over Ge + $GeI_2$

| Run | T°K. | Pressure of $GeI_4$ (atm.) | Pressure of $GeI_2$ (atm.) |
|---|---|---|---|
| C' | 557 | $4.1 \times 10^{-4}$ | $1.3 \times 10^{-4}$ |
| D' | 557 | $9.6 \times 10^{-4}$ | $1.6 \times 10^{-4}$ |

It was then decided to modify the flow-method technique. The $GeI_2$ was put in a metal boat and the boat was weighed before and after each run. Then there was no concern over where or how the $GeI_4$ condensed out--the extent of reaction was determined by the change in weight of the boat, after correcting for the sublimation of $GeI_2$.

For the first five runs, a platinum boat weighing about 4 grams was used. It was noticed after a few runs that the boat was being alloyed by the metallic germanium, and since this alloying might cause erroneous results (because of the formation of non-standard metallic germanium), the remaining runs were carried out using a molybdenum boat weighing about 3 grams.

The method of preparing germanous iodide has been described in Section II. About 2-3 grams of the $GeI_2$ was used in each series of runs; volatile impurities were eliminated by making preliminary blank runs. Between runs, the mixture of $GeI_2$ and Ge in the boat was stirred slightly so that the metal particles (which formed mainly on the top surface) would not keep equilibrium from being rapidly established. After four or five runs, so much disproportionation had occurred that, for fear of the metal particles preventing equilibrium,

a fresh batch of $GeI_2$ was put in the boat.

In runs 10 and 11 the sublimed $GeI_2$ was separated from the $GeI_4$, dissolved, and titrated with permanganate. The vapor pressures for $GeI_2$ calculated from these runs are: at 594°K., $p = 5.1 \times 10^{-4}$ atm.; at 618°K., $p = 26.7 \times 10^{-4}$ atm. Using these data and the data in Table 3, we calculate $\Delta F^\circ = 30{,}000 - 36T$ as a rough free energy equation for the sublimation of $GeI_2$. In all the following runs except runs 10 and 11, the amount of sublimed $GeI_2$ was calculated from this equation. The weight of sublimed $GeI_2$ was always about 10% of the total loss in weight, so very little inaccuracy resulted from use of the crude equation.

The experimental data and calculated pressures are presented in Table 4. It can be seen that the trends in calculated pressure with various flow rates are rather small compared to the experimental error. It is difficult to say whether the higher calculated pressures at lower flow rates are due to better equilibria or to convection in the reaction chamber, hence equal weight will be assigned to all the data.

The entropy of Ge(s) is 10.1 cal./deg. at 298°K.[7] We have calculated $S^\circ_{298} = 107.4$ for $GeI_4(g)$, and by Latimer's tables[8] $S^\circ_{298} = 38.5$ for $GeI_2(s)$. Hence $\Delta S^\circ_{298} = 40.5$ cal./deg. for

$$2GeI_2(s) = Ge(s) + GeI_4(g).$$

For $GeI_4(g)$ $C^\circ_{p298} = 25.2$ and for Ge(s) $C^\circ_{p298} = 6.2$. Using Kopp's rule, we calculate $C^\circ_{p298} = 19.5$ for $GeI_2(s)$. Therefore as a rough approximation we shall take $\Delta C^\circ_p = -8$ for the above reaction from 298°K. to 643°K. Then $\Delta S^\circ = -8 - I - 8\ln t$

and $I = -94$.

Table 4

The Disproportionation of Germanous Iodide

| Run | T°K | Moles of Argon | Flow rate (ml./min.) | Loss in weight of boat (grams) | Weight of sublimed $GeI_2$ | Moles $GeI_4$ formed | Total pressure (atm.) | Pressure of $GeI_4$ (atm) |
|---|---|---|---|---|---|---|---|---|
| 2 | 569 | .0805 | 16.9 | .0961 | .0058 | $15.6 \times 10^{-5}$ | .996 | $1.93 \times 10^{-3}$ |
| 3 | 569 | .0812 | 41.7 | .0540 | .0058 | $8.3 \times 10^{-5}$ | 1.000 | $1.02 \times 10^{-3}$ |
| 4 | 569 | .0819 | 54 | .0629 | .0058 | $9.8 \times 10^{-5}$ | 1.003 | $1.20 \times 10^{-3}$ |
| 6 | 569 | .0808 | 16.3 | .0592 | .0058 | $9.2 \times 10^{-5}$ | 1.000 | $1.14 \times 10^{-3}$ |
| 7 | 594 | .0211 | 6.9 | .0593 | .0048 | $9.4 \times 10^{-5}$ | .995 | $4.4 \times 10^{-3}$ |
| 8 | 594 | .0211 | 13.8 | .0507 | .0048 | $7.9 \times 10^{-5}$ | .995 | $3.7 \times 10^{-3}$ |
| 10 | 594 | .0210 | 21.0 | .0551 | .0036 | $8.9 \times 10^{-5}$ | .988 | $4.2 \times 10^{-3}$ |
| 9 | 544 | .236 | 26.8 | .0415 | .0052 | $6.3 \times 10^{-5}$ | .989 | $0.26 \times 10^{-3}$ |
| 12 | 544 | .239 | 17.9 | .0762 | .0052 | $12.2 \times 10^{-5}$ | .993 | $0.51 \times 10^{-3}$ |
| 11 | 618 | .0210 | 11.2 | .1647 | .0186 | $25.2 \times 10^{-5}$ | .987 | $11.8 \times 10^{-3}$ |
| 13 | 643 | .0208 | 12.7 | .3300 | .0329 | $51.2 \times 10^{-5}$ | .992 | $24.4 \times 10^{-3}$ |
| 14 | 643 | .0208 | 14.0 | .3569 | .0329 | $55.9 \times 10^{-5}$ | .992 | $26.7 \times 10^{-3}$ |

For each run in Table 4, it is now possible to calculate $\Delta H^\circ$ using the equation

$$\Delta H^\circ = \Delta F^\circ - 8T\ln T + 94T.$$

The calculated values of $\Delta H^\circ_0$ are given in Table 5. It can be seen that over the experimental range of 100°, there is no significant trend in $\Delta H^\circ$. We shall use the average value $\Delta H^\circ_0 = 32{,}100$ cal./mole. Hence

$$\Delta H^\circ = 32{,}100 - 8T$$

$$\Delta F^\circ = 32{,}100 + 8T\ln T - 94T$$

$$\Delta S^\circ = 86 - 8\ln T$$

and

$$\Delta H^\circ_{298} = 29{,}700 \text{ cal./mole}$$

$$\Delta F^\circ_{298} = 17{,}700 \text{ cal./mole}$$

$$\Delta S^\circ_{298} = 40.5 \text{ cal./deg.-mole}$$

In Figure 4, the experimental free energies of disproportionation of $GeI_2(s)$ to $Ge(s)$ and $GeI_4(g)$ are plotted <u>versus</u> 1/T. The curve was calculated using the above free energy equation.

Table 5

Values of $\Delta H_0^\circ$ for the disproportionation of $GeI_2(s)$

| Run | T°K. | $\Delta F^\circ$ | $\Delta H_0^\circ$ |
|---|---|---|---|
| 2 | 569 | 7,060 | 31,710 |
| 3 | 569 | 7,780 | 32,430 |
| 4 | 569 | 7,600 | 32,250 |
| 6 | 569 | 7,660 | 32,310 |
| 7 | 594 | 6,400 | 31.920 |
| 8 | 594 | 6,610 | 32,130 |
| 10 | 594 | 6,460 | 31,980 |
| 9 | 544 | 8,920 | 32,670 |
| 12 | 544 | 8,190 | 31,940 |
| 11 | 618 | 5,450 | 31,810 |
| 13 | 643 | 4,740 | 31,960 |
| 14 | 643 | 4,630 | 31,850 |
| C' | 557 | 8,630 | 32,840 |
| D' | 557 | 7,690 | 31,900 |

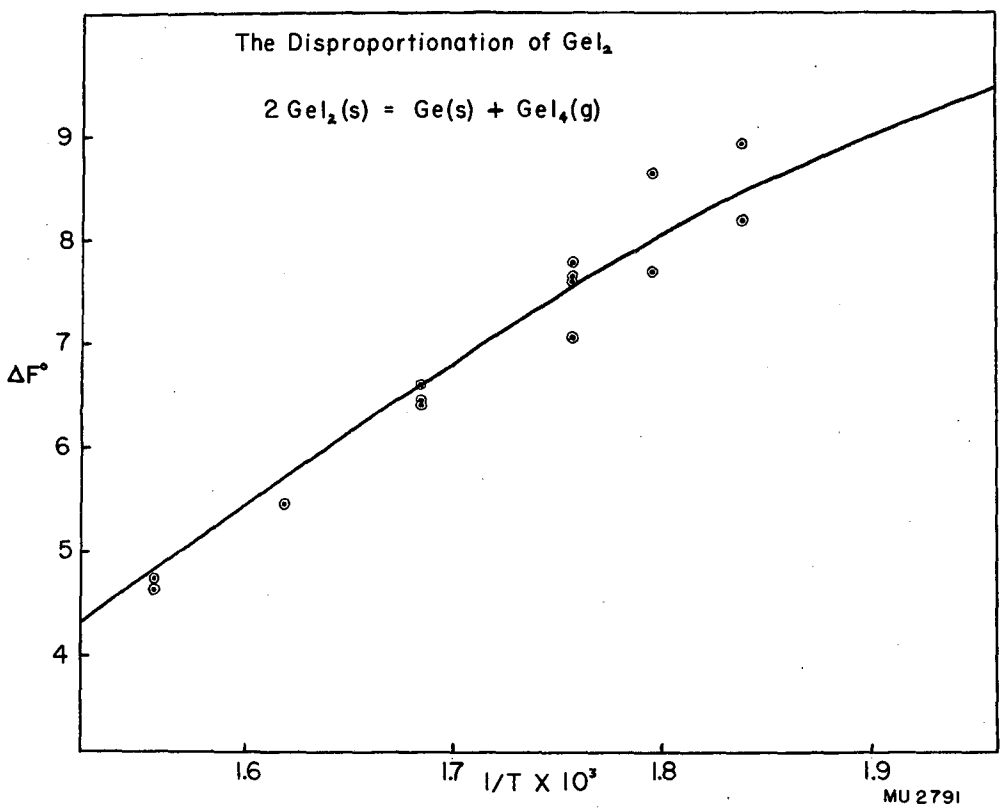
The Disproportionation of GeI₂
2 GeI₂(s) = Ge(s) + GeI₄(g)
ΔF°
9
8
7
6
5
4
1.6
1.7
1.8
1.9
1/T X 10³
MU 2791

Fig. 4

REFERENCES

1. Brewer, F. M., J. Phys. Chem. 31, 1817 (1927).

2. Brewer, F. M., and Dennis, L. M., J. Phys. Chem. 31, 1537 (1927).

3. Brewer, L., "The Fusion and Vaporization Data of the Halides," Paper 7 from "The Chemistry and Metallurgy of Miscellaneous Materials," L. Quill, Editor.

4. Herzberg, G., "Infra-Red and Raman Spectra of Polyatomic Molecules," Van Nostrand, New York, 1945.

5. Hildebrand, J. H., J. Chem. Phys. 15, 727-36 (1947).

6. Johnston, H. L., Savedoff, L. and Belzer, J., "Contributions to the Thermodynamic Functions by a Planck-Einstein Oscillator in One Degree of Freedom," Office of Naval Research, July, 1949.

7. Kelley, K. K., "Contributions to the Data on Theoretical Metallurgy, XI: Entropies of Inorganic Substances," Bureau of Mines Bulletin 477.

8. Latimer, W. M., J. Am. Chem. Soc., 73, 1480 (1951).

9. Lister, M. W., and Sutton, L. E., Trans. Faraday Soc. 37, 393-406 (1941).

10. Neu, T. and Gwinn, W., J. Am. Chem. Soc., 70, 3463-5 (1948).

11. Pauling, L. and Brockway, L. O., J. Am. Chem. Soc. 57, 2684-92 (1935).

12. Rouault, M., Ann. phys. 14, 78-147 (1940).

13. Winkler, C., J. prakt. Chem., (2) 34, 226 (1886).

# IV. THE GeO - $GeO_2$ ELECTRODE

## Preliminary Study

Early in this investigation it was thought that germanous iodide was not only insoluble in water, but that it was also not hydrolyzed when in contact with dilute acid aqueous solutions. Consequently an attempt was made to study the half-cell

$$GeI_2 + 2H_2O = GeO_2 + 4H^+ + 2I^- + 2e^-.$$

The cell pictured in Figure 5 (A) was used. An intimate mixture of germanous iodide and germanium dioxide completely covered the platinum spiral electrode. Two different silver-silver iodide electrodes were used alternately. These were prepared by fusing silver wires through ends of soft glass tubes and by then using these as anodes in the D.C. (1.5 volts) electrolysis of a sodium iodide solution. Corks were slipped around the glass tubes so that these electrodes could then be supported in the electrolyte without circulation of air over the electrolyte (which would cause oxidation of the iodide in the electrolyte). The cell compartment containing the silver-silver iodide electrode was connected to the cell compartment containing the $GeI_2$-$GeO_2$ electrode by a glass tube with two stopcocks. Except when measurements were being taken, the stopcocks were closed and the entire cell was stored in a dark place. The two Ag-AgI electrodes gave readings which agreed within one or two millivolts. The Ag-AgI electrode which was not in use at a given time was immersed in water and stored in the dark.

The electrolyte was prepared by mixing and diluting standardized solutions of sodium iodide and perchloric acid. When the electrolyte

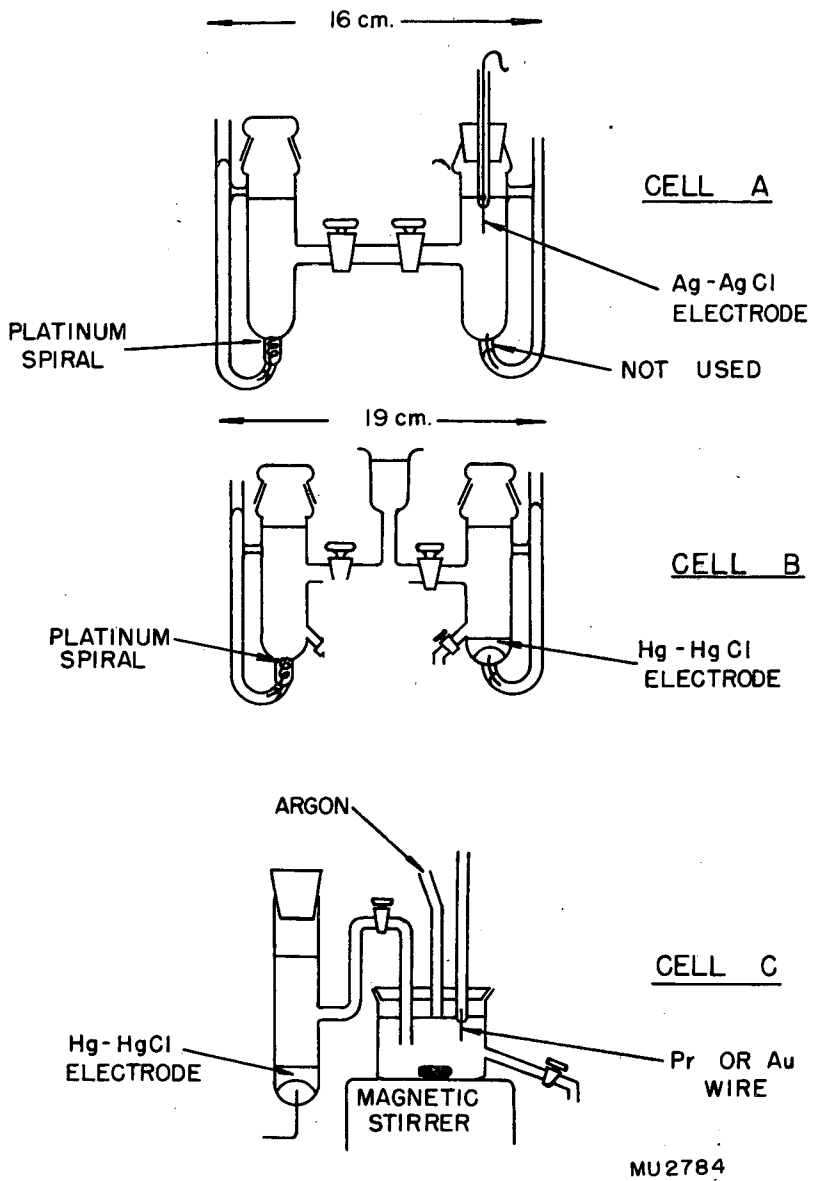
16 cm.
CELL A
Ag-Ag Cl
ELECTRODE
PLATINUM
SPIRAL
NOT USED
19 cm.
CELL B
PLATINUM
SPIRAL
Hg-Hg Cl
ELECTRODE
ARGON
CELL C
Hg-HgCl
ELECTRODE
Pr OR Au
WIRE
MAGNETIC
STIRRER
MU2784

Fig. 5

in the cell was changed, the old solution was pipetted out and the cell then rinsed several times with the new solution.

The cell was not thermostatted; the average room temperature was ca. 23°C. The potentials were measured with a Leeds and Northrup student-type potentiometer.

At first attempts were made to interpret the results on the assumption that the net cell reaction was

$$GeI_2 + 2H_2O + 2AgI = GeO_2 + Ag + 4H^+ + 4I^-.$$

But the data did not agree with the thermodynamic equation for dependence of emf on concentration when assuming this reaction. In order to have agreement with the equation, it was decided that the most likely reaction occurring was

$$GeO + H_2O + 2AgI = GeO_2 + 2H^+ + 2I^- + Ag.$$

This implies that the $GeI_2$ had hydrolyzed according to the equation

$$GeI_2 + H_2O = GeO + 2H^+ + 2I^-.$$

One might expect that some of the first data obtained would be in error because of the extra hydriodic acid introduced by this hydrolysis. This effect was apparently very small; probably in the initial rinsing of the cell this excess HI was for the most part eliminated. The cell data were therefore calculated assuming the cell was truly represented by the scheme: GeO(hydrous), $GeO_2$; x$\underline{M}$ $HClO_4$ and y$\underline{M}$ NaI; AgI, Ag. The activity coefficients for the hydriodic acid were obtained by using the "principle of ionic strength"[4]; the activity coefficient of HI in a particular solution was assumed to be the same as that in a hydriodic acid solution of the same ionic strength. The activity coefficients for hydriodic acid were taken from the data of Harned and Robinson[2]. The experimental details are given in Table 6.

Table 6

Cell Voltages

| Molarity of $HClO_4$ | Molarity of NaI | E | $E^\circ$ |
|---|---|---|---|
| 0.205 | 0.194 | .065 | -.028 |
| 0.102 | 0.097 | .103 | -.027 |
| 0.0205 | 0.0194 | .175 | -.033 |
| 0.512 | 0.485 | .016 | -.022 |

There is a decided trend in the values of $E^\circ$ calculated from the data, the values being more negative for the more dilute solutions. However, we shall use the average value, $E^\circ = -.03$ v. Taking 0.15 v. as the standard potential of the Ag-AgI electrode[3], we calculate

$$GeO + H_2O = GeO_2 + 2H^+ + 2e^-. \quad E^\circ = 0.12$$

Further Studies

The preceding investigation was encouraging because it demonstrated that the $GeO$-$GeO_2$ electrode is reversible and amenable to further study. Consequently a number of cells were prepared in order to more carefully study this electrode. Many of the results were of low accuracy and the details of these experiments are not given.

Cell: $GeO$, $GeO_2$, x*M* HCl: sat'd. KCl, HgCl, Hg.--A suspension of hydrous germanous oxide and $GeO_2$ in aqueous hydrochloric acid was stirred in a beaker under an atmosphere of argon. A platinum wire electrode and a gold wire electrode were alternately dipped into the

suspension to serve as inert electrodes. A capillary bridge containing a saturated KCl solution led to a saturated KCl calomel electrode. Three concentrations of HCl were employed: .0910 molar, .640 molar and 1.14 molar. The reproducibility of the potentials was very poor and only a very rough value could be obtained.

$$GeO + H_2O = GeO_2 + 2H^+ + 2e^-. \qquad E^\circ = \text{ca. } 0.06$$

Cell: $GeO, GeO_2, x\underline{M}\ HCl, HgCl, Hg$.--Two cells were studied concurrently. Both cells were constructed so that the electrolyte could be easily and thoroughly rinsed through the cell compartments. In one cell (Fig. 5 - B) there was no stirring of the $GeO$-$GeO_2$ electrode. The electrolyte was introduced in the top funnel and drained out either of the two small stopcocks near the bottom of each cell compartment. The two larger stopcocks in the cross-arm were opened only when rinsing the cell with electrolyte or when making measurements. In the other cell (Fig. 5 - C), the $GeO$-$GeO_2$ suspension was stirred. Stirring was stopped to allow the solids to settle out only when rinsing the beaker with electrolyte. The beaker was drained by opening the small stopcock connected near its bottom. During measurements, the stopcock in the arm of the calomel half-cell was opened; no drainage occurred because of the tight-fitting stopper at the top. When it was desired to drain the calomel half-cell, it was necessary to both open the stopcock and remove the top stopper. Neither cell was thermostatted; the room temperature was about 23°C.

The data were interpreted by assuming the net cell reaction to be

$$GeO + H_2O + 2HgCl = GeO_2 + 2Hg + 2H^+ + 2Cl^-.$$

The activity coefficients for hydrochloric acid were interpolated from the values given by Harned and Owen[1]. The details are given in Table 7.

Table 7

Cell Voltages

| Molarity of HCl | Cell without stirring | | Cell with stirring | |
|---|---|---|---|---|
| | E | $E^\circ$ | E | $E^\circ$ |
| .00960 | .562 | .318 | .62 | .38 |
| .0384 | .511 | .335 | .518 | .342 |
| .0960 | .473 | .341 | .495 | .363 |
| .297 | .425 | .348 | .413 | .336 |
| | Average $E^\circ$ -- | .336 | | .355 |

Taking -0.268 as the standard potential of the calomel electrode[3], we calculate for $GeO + H_2O = GeO_2 + 2H^+ + 2e^-$: $E^\circ = 0.068$ (cell without stirring) and $E^\circ = 0.087$ (cell with stirring).

Cell: $GeO, GeO_2$, x$\underline{M}$ $HClO_4$, y$\underline{M}$ NaI,AgI,Ag.--The electrolyte used in the cell-without-stirring (Fig. 5-B) of the preceding investigation was drained and the $GeO$-$GeO_2$ compartment was rinsed with a perchloric acid-sodium iodide electrolyte. Thus the same $GeO$-$GeO_2$ electrode was used as in the preceding investigation. Freshly prepared Ag-AgI electrodes were dipped into the electrolyte in the top funnel. Calculations were made exactly as in the previous study of this type of cell. (Cf. "Preliminary Study"). The details are given in Table 8.

Table 8

Cell Voltages

| Molarity of $HClO_4$ | Molarity of NaI | E | $E^\circ$ |
|---|---|---|---|
| .00925 | .0100 | .151 | -.094 |
| .0185 | .0200 | .125 | -.086 |
| .0925 | .0800 | .065 | -.072 |
| .0462 | .0476 | .087 | -.080 |
| | | Average $E^\circ$ = | -.083 |

These data give for the half-cell

$$GeO + H_2O = GeO_2 + 2H^+ + 2e^-. \qquad E^\circ = 0.068$$

Conclusive Study

In the preceding studies, it was noted that the reproducibility of the standard potential in any one set of measurements was much better than the reproducibility of the standard potential from cell to cell. In addition, a more curious observation was made: freshly prepared germanous hydroxide (prepared by precipitation in the cold) is yellow, and it stays this color if stored under water at room temperature. But if an aqeuous suspension of the yellow hydroxide is boiled, or if it is treated in the cold with aqueous hydrochloric acid, the color changes to a dark brown. These observations suggested that the lack of reproducibility of the cell data was due to the varying nature of the germanous hydroxide. Apparently the stable form of germanous hydroxide in the presence of water is the dark

brown form, and the conversion is catalyzed by heat and at least one electrolyte - hydrochloric acid.

It was decided to directly confirm this suspicion by making a cell composed of two $GeO-GeO_2$ electrodes--one containing the yellow form and the other containing the brown form. Hereafter the "brown form" of germanous hydroxide refers to material prepared in the following manner. Freshly prepared, washed germanous hydroxide was added to a large volume of water (about 100 ml. per gram GeO) and the suspension held at the boiling point for 45 minutes, under an atmosphere of argon or nitrogen. Most of the water was then removed by centrifugation and decantation.

A cell similar to cell A (Fig. 5) was employed, except that both sides had spiral electrodes. For no particular reason, except that such a cell was on hand, one spiral was of gold and the other of platinum. The electrolyte was 0.0025 M HCl; such a low concentration of hydrochloric acid was found to very slowly catalyze the conversion of GeO from yellow to brown. A mixture of $GeO_2$ and brown GeO was rinsed with the electrolyte and packed around the gold spiral. A mixture of $GeO_2$ and yellow GeO was also rinsed with the electrolyte, but packed around the platinum spiral. The potential of this cell was measured at various times after initially preparing the cell. The electrode with the brown GeO was positive. At no time was a finite current allowed to pass through the cell.

As can be seen from Table 9, this experiment fully confirmed the predictions. Initially the cell potential was about 0.155 volts corresponding to the cell reaction (two electron change):

$$GeO(yellow) = GeO(brown)$$

Table 9

Cell Voltages

| Time, hours | E |
|---|---|
| 1.0 | .155 |
| 3.0 | .156 |
| 6.8 | .129 |
| 21.5 | .122 |
| 43.5 | .098 |
| 47.5 | .090 |
| 117 | .064 |

For this reaction we calculate $\Delta F^{\circ} = -7{,}200$ cal./mole. As was expected, the cell potential dropped gradually with time, because of spontaneous conversion of the yellow GeO to the brown GeO.

Two more cells were prepared (cell vessels like cell B, Fig. 5) and runs made concurrently. Both were of the type

$$GeO, GeO_2,\ x\underline{M}\ HCl,\ HgCl, Hg,$$

but one contained yellow GeO initially and the other contained brown GeO.

Cell Materials

Double distilled mercury was washed with nitric acid and rinsed well with water. Baker and Adamson U.S.P. mercurous chloride was washed by decantation with water. The hydrochloric acid solutions were prepared by appropriate dilution of stock solutions, which had been standardized by titration of weighed amounts of mercuric oxide by the iodo-mercurate method. In one case, the hydrochloric acid was prepared by diluting some constant boiling acid. The molalities and activity coefficients were calculated from the data of Harned and Owen.[1] Whenever the electrolyte was changed, the cell was rinsed very thoroughly by draining and adding the fresh electrolyte in the top funnel. This rinsing was repeated at hourly intervals until the cell potential changed less than a millivolt. The most dilute solution of HCl was used at first, and the most concentrated last. Therefore one would expect the first run with the cell containing the yellow GeO to be in disagreement with the later runs, where the HCl concentration was sufficient to rapidly convert the GeO to the stable form.

The cells were immersed in a thermostatted bath whose temperature was held constant to ±0.1°C. Potentials were measured at 25.0°C. and at temperatures about 6° above and below this temperature. The details are given in Table 10.

We see that the first run using the yellow GeO gave a standard potential 0.155 v. higher than the average of all the other standard potentials, in agreement with the preceding experiment. We shall take $E^{\circ}(25^{\circ}C.) = 0.386 \pm .010$ volts for

$$GeO(brown) + 2HgCl + H_2O = GeO_2(ppt.) + 2Hg + 2H^+ + 2Cl^-.$$

Since the standard potential of the calomel electrode is -0.268 v., we calculate $E^{\circ} = 0.118 \pm .010$ volts for the GeO(brown)-$GeO_2$ couple.

An attempt to calculate the entropy of the cell reaction from the temperature coefficients of the potential at various concentrations gave discordant results. Much too high entropies were obtained from the data for the dilute solutions.

Table 10

| | Molality of HCl | Temperature °C | E | E°(25°) |
|---|---|---|---|---|
| Brown GeO | | | | |
| | .00260 | 25.0° | .690 | .381 |
| | | 19.0 | .675 | |
| | | 31.0 | .707 | |
| | .1042 | 25.0 | .519 | .391 |
| | | 19.6 | .514 | |
| | | 33.3 | .526 | |
| | 1.06 | 25.0 | .400 | .393 |
| | | 21.5 | .4007 | |
| | | 33.2 | .4017 | |
| Yellow GeO | | | | |
| | .00260 | 25.0 | .850 | .541 |
| | | 19.0 | .834 | |
| | | 31.0 | .865 | |
| | .1042 | 25.0 | .505 | .377 |
| | | 19.6 | .499 | |
| | | 33.3 | .514 | |
| | 1.043 | 25.0 | .395 | .387 |
| | | 21.5 | .394 | |
| | | 33.2 | .396 | |

## REFERENCES

1. Harned, H., and Owen, B., "The Physical Chemistry of Electrolytic Solutions," Reinhold, New York, 1943.
2. Harned, H. and Robinson, Trans. Faraday Soc. 37, 302-7 (1941).
3. Latimer, W. M, "The Oxidation States of the Elements and Their Potentials in Aqueous Solutions," Prentice-Hall, New York, 1938.
4. Lewis, G. N. and Randall, M., "Thermodynamics and the Free Energy of Chemical Substances," McGraw-Hill, New York, 1923.

## V. THE SOLUBILITY OF GERMANOUS HYDROXIDE

Everest and Terrey[1] found germanous hydroxide to be insoluble in alkaline solutions and hence discredited the reports of Hantzsch[2] and others who postulated "germano-formic acid". They measured the solubility of the hydroxide in water and found a solubility of $5.0 \times 10^{-3}$ molar. Their method of analysis consisted of oxidizing the +2 germanium in solution to germanic acid and then titrating this acid after addition of glycerol. (Any germanic acid already present or formed by air oxidation of the germanous hydroxide would have led to high results). These investigators observed the spontaneous darkening of germanous hydroxide which was discussed in Section IV. Presumably their solubility measurements were carried out with the yellow form of the hydroxide.

The purpose of this investigation was to check the solubility of the hydroxide (brown) in water and to determine the solubility in various concentrations of hydrochloric acid.

Brown germanous hydroxide was prepared as described in Section IV. Excess of the moist hydroxide was washed by decantation with the solvent and then a mixture of the hydroxide and the solvent was sealed off in an argon atmosphere in a closed tube. The flask was immersed in a bath thermostatted at 25.0 ± 0.1°C. and the suspension was stirred magnetically, using a glass-covered iron bar. After a suitable time, the flask was opened, argon flushed over the suspension, and the suspension was filtered by sucking it up into a pipet equipped with a removable sintered glass tip. (The pipet delivered 19.4 ml.). The filtered solution was acidified if necessary, sodium

iodide was added and the +2 germanium was titrated in an inert atmosphere with standard permanganate. For the dilute solutions, .005 N $KMnO_4$ was used; for the more concentrated solutions, .1 N $KMnO_4$ was used. The first appearance of the brwon triiodide color was taken as the endpoint.

The suspension of hydroxide and solvent was usually stirred for at least six hours before filtering and titrating. This was considered ample time for reaching equilibrium, because other runs (wherein aliquots of the same suspension were titrated at various times) showed no appreciable change in concentration after four hours.

The hydrochloric acid solutions were prepared by suitable dilution of standardized 0.1 molar, 3 molar and 6 molar solutions of HCl. The solutions were either standardized by titration with sodium hydroxide solutions which had been standardized vs. potassium acid phthalate or standardized by titration of sodium carbonate. In one experiment, using a relatively concentrated solution of HCl, it was necessary to titrate the acid after equilibration with the germanous hydroxide, because the solubility of the hydroxide was so great that it would not have been economical to rinse the hydroxide with the acid.

The results of the solubility determinations in water and hydrochloric acid solutions are given in Tables 11 and 12. An average of about $2 \times 10^{-4}$ molar was obtained for the solubility of germanous hydroxide in water, as compared with $5 \times 10^{-3}$ molar obtained by Everest and Terrey. Some of the difference may be ascribed to the different forms of the hydroxide used. It can be seen that the solubility in hydrochloric acid remains fairly low below 3 M HCl and suddenly begins to increase at about 4 M HCl. Even in 4 M HCl, however, the solubility is only ca 0.01 molar.

Table 11

Solubility of Brown Germanous Hydroxide in Water

| Experiment | Time allowed to reach equilibrium (hours) | Molarity of +2 germanium |
|---|---|---|
| 1 | 1.1 | $1.2 \times 10^{-4}$ |
| | 20 | $1.5 \times 10^{-4}$ |
| 4* | 13 | $1.8 \times 10^{-5}$ |
| 22 | 13 | $2.3 \times 10^{-4}$ |

*Hydroxide which had previously been equilibrated with 0.1 M HCl was used.

Table 12

Solubility of Brown Germanous Hydroxide in Hydrochloric Acid Solutions

| Experiment | Molarity of HCl | Molarity of +2 germanium |
|---|---|---|
| 2 | 0.01 | $1.1 \times 10^{-4}$ |
| 3 | 0.1 | $4 \times 10^{-5}$ |
| 5 | 1.02 | $3.4 \times 10^{-4}$ |
| | | $2.7 \times 10^{-4}$ |
| 8 | 1.02 | $1.8 \times 10^{-4}$ |
| 7 | 1.79 | $1.6 \times 10^{-3}$ |
| 9 | 1.79 | $1.0 \times 10^{-3}$ |
| 11 | 2.43 | $4.9 \times 10^{-4}$ |
| | | $4.4 \times 10^{-4}$ |
| 6 | 2.99 | $2.6 \times 10^{-3}$ |
| | | $2.8 \times 10^{-3}$ |
| 10 | 3.65 | $2.5 \times 10^{-3}$ |
| 13 | 3.65 | $2.7 \times 10^{-3}$ |
| | | $2.7 \times 10^{-3}$ |
| 14 | 4.00 | $8.7 \times 10^{-3}$ |
| | | $8.7 \times 10^{-3}$ |
| 12 | 4.39 | $2.5 \times 10^{-2}$ |
| | | $2.7 \times 10^{-2}$ |

At this point it was decided to determine, if possible, whether the increased solubility at high concentrations of HCl was due to the increase in the activity of the chloride ion or the increase in activity of the hydrogen ion. Consequently a series of solubility measurements were carried out at constant ionic strength (u = 4.00) in which the chloride and hydrogen ion concentrations were varied independently of one another. The solutions were made up by mixing standardized solutions of 4M HCl, 4M $HClO_4$ and 4M NaCl. The results are shown in Table 13. The data are very inaccurate; the lack of reproducibility is probably mainly due to the difficulty in obtaining germanous hydroxide in a stable form. Only one generalization can be gleaned from Table 13: when the chloride ion concentration is held constant at 4 molar while the hydrogen ion concentration is increased (or vice versa), the solubility of germanous hydroxide goes up. This behavior is consistent with the formation of a complex ion of the type $GeCl_x^{+(2-x)}$, where $x > 0$. The net reaction corresponding to such a complex formation is

$$GeO + 2H^+ + xCl^- = H_2O + GeCl_x^{+(2-x)}.$$

## REFERENCES

1. Everest, D. A. and Terry, H., J. Chem. Soc. 1950, 2282-5.
2. Hantzsch, Z. anorg. Chem. 30, 316 (1902).

Table 13

Solubility of Brown Germanous Hydroxide in Various Chloride-Perchlorate Solutions

| Experiment | Molarity of HCl | Molarity of $HClO_4$ | Molarity of NaCl | Molarity of +2 germanium |
|---|---|---|---|---|
| 15 | 0 | 4.00 | 0 | $3.4 \times 10^{-4}$ |
| 29 | 0 | 4.00 | 0 | $10.7 \times 10^{-4}$ |
| 28 | 0.50 | 3.50 | 0 | $2.0 \times 10^{-3}$ |
| 30 | 0.50 | 3.50 | 0 | $14.5 \times 10^{-3}$ |
| 21 | 1.00 | 3.00 | 0 | $1.7 \times 10^{-2}$ |
| 27 | 1.00 | 3.00 | 0 | $1.7 \times 10^{-2}$ |
| 25 | 2.00 | 2.00 | 0 | $1.9 \times 10^{-2}$ |
| 26 | 2.00 | 2.00 | 0 | $1.8 \times 10^{-2}$ |
| 24 | 3.00 | 1.00 | 0 | $2.3 \times 10^{-2}$ |
| 14 | 4.00 | 0 | 0 | $8.7 \times 10^{-3}$ |
| 16 | 0 | 0 | 4.00 | $4.9 \times 10^{-5}$ |
| 23 | 0 | 0 | 4.00 | $7.3 \times 10^{-5}$ |
| 17 | 1.00 | 0 | 3.00 | $1.1 \times 10^{-3}$ |
| 20 | 1.00 | 0 | 3.00 | $1.0 \times 10^{-3}$ |
| 18 | 2.00 | 0 | 2.00 | $1.0 \times 10^{-2}$ |
| 19 | 2.00 | 0 | 2.00 | $1.2 \times 10^{-2}$ |
| 14 | 4.00 | 0 | 0 | $8.7 \times 10^{-3}$ |

# VI. THE VAPOR PRESSURE, HEAT OF FORMATION AND X-RAY PATTERN OF GERMANOUS OXIDE.

## THE VAPOR PRESSURE OF GeO.

### Introduction

Brewer and Mastick[1] have shown how it is possible to calculate the dissociation energies of gaseous diatomic oxides from thermal data and thus provide a check on spectroscopic measurements (which involve long, uncertain Birge-Sponer extrapolations). Since Searcy's[5] recent determination of the heat of vaporization of metallic germanium, there are only two data lacking in order to calculate the dissociation energy of GeO: the heat of formation of GeO and the heat of sublimation of GeO.

### Preparation of Germanous Oxide

Germanous hydroxide was prepared by the same method as described in Section II. A suspension of the material in water was boiled for 45 minutes and then centrifuged. After decanting off the water, the pasty material was transferred to a glass boat and set in a glass tube. By heating for several hours at 450°C. in vacuo, the material was dehydrated to a hard, black substance. Two such preparations were carried out for the vapor pressure experiments: one sample was 89.7% GeO by analysis, the other 95.8% GeO. Probably the main impurity in each case was $GeO_2$.

The analyses were carried out by oxidizing the GeO with hydrogen peroxide and then igniting to $GeO_2$ in porcelain crucibles. Two samples were taken for each analysis; in both cases the ratios weight after::weight before agreed within 0.2%.

A sample of each preparation of GeO was submitted for spectrographic analysis. Only traces of aluminum, calcium and iron were found, and a "weak" amount of sodium. No trace of arsenic was detected.

Samples of the germanous oxide were also submitted for X-ray examination. (Cf. the last part of this section).

Vapor Pressure Measurements

The Knudsen method of molecular effusion was used for measuring the vapor pressure of GeO. The cell was made of Pyrex glass, with a standard taper joint connecting the lid and the base. (Cf. Fig. 6). The top of the lid was of very thin glass and had a circular hole in its center. The hole diameter was measured microscopically and was found to be 0.219 ± .003 cm. The thickness of the lid wall next to the hole was not measured, but by visual examination it was estimated to be 0.02 cm. or less. A small glass ring on the side of the cell permitted the cell to be lifted with a wire from the cylinder which contained it during the runs. The weight of the empty cell was 15.9925 grams; the weight of effusate was ascertained by weighing the cell containing the sample before and after each run.

In order to calibrate the hole, i.e. to measure its "probability factor," the vapor pressure of mercury was measured in two preliminary runs. The cell was charged with about 20 grams of clean mercury, and a blank run was made first to eliminate any volatile impurities. The vacuum was furnished by a mechanical oil pump supplemented by two oil diffusion pumps. The pressure during the runs was always well below 0.1 micron. While evacuating the system, the cylinder holding the cell was held in an ice-salt bath (ca -20°C.). The run was

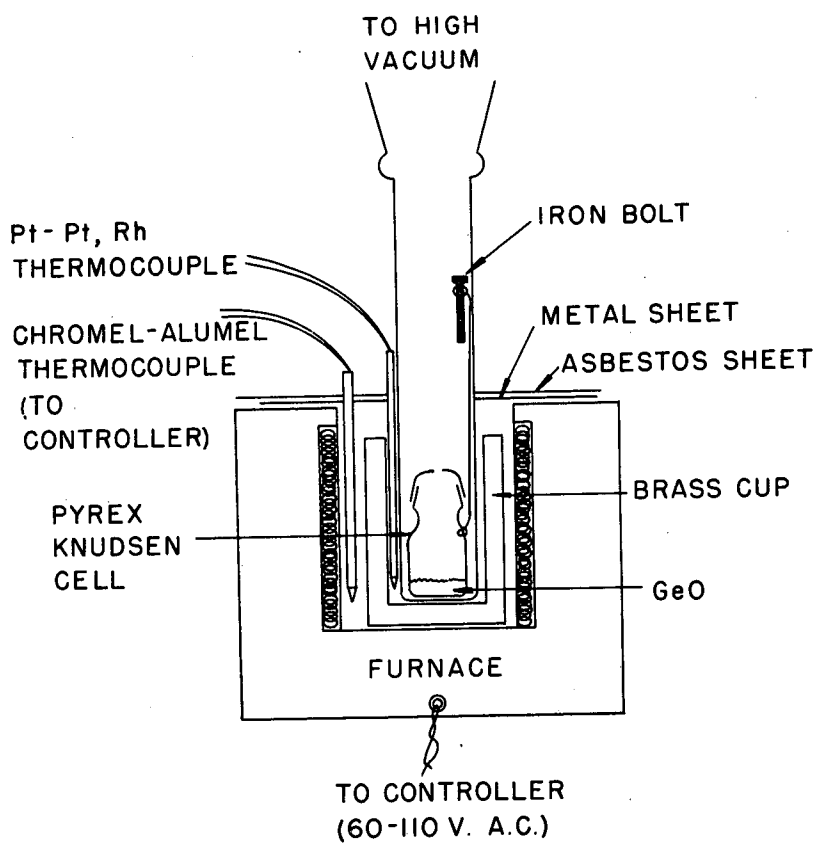


APPARATUS FOR KNUDSEN EFFUSION EXPERIMENTS

MU 2788

Fig. 6

started by replacing the ice-salt bath with a manually controlled water bath, and stopped by breaking the vacuum. The details are given in Table 14.

Table 14

The Vapor Pressure of Mercury

| Time, sec. | Temp., °C. | Weight of effused mercury, grams | True Vapor Pressure of mercury, atm. | Measured Vapor Pressure, atm. |
|---|---|---|---|---|
| 11,220 | 26.1 | .0347 | $2.65 \times 10^{-6}$ | $2.25 \times 10^{-6}$ |
| 6,180 | 45.0 | .0710 | $1.17 \times 10^{-5}$ | $0.865 \times 10^{-5}$ |

The pressures were calculated with the equation

$$p = z\sqrt{MT}/44.4\ a \cdot t,$$

where p is the pressure in atmospheres, z is the number of moles of vapor effusing, M is the molecular weight, T is the absolute temperature, a is the hole area in $cm.^2$, and t is the time in seconds. The apparent probability factor for the run at 26.1° was 0.85; for the run at 46.0° it was 0.74. Hereafter all calculations were made with the modified equation

$$p = z\sqrt{MT}/35.5\ a \cdot t,$$

which assumes a probability factor of 0.80.

During the runs with GeO, it was found impossible to initiate the runs quickly enough either by suddenly applying the vacuum or by suddenly raising the temperature. Consequently the lower end of the cylinder (containing the cell in its upper part) was heated up to the proper temperature while the system was under a good vacuum,

and then the cell was lowered into the hot zone with a wire which had an iron bolt attached to it. The position of the iron bolt, and consequently of the cell, was manually controlled by a strong permanent magnet completely outside the evacuated system. The run was terminated by completely removing the heater from the cylinder--this causing an abrupt drop in the temperature.

It will be noted from Fig. 6 that the "hot zone" of the cylinder was surrounded by a thick brass cup, which in turn was enclosed in an insulated resistance furnace. A chromel-alumel thermocouple outside the brass cup led to a Minimax recorder which served to hold the temperature of the furnace outside the brass cup constant to ±5°C. Because of thermal leakage and lag, the temperature inside the brass cup was about 40° lower than the outside temperature and constant to about ±0.5°C. The temperature of the inside of the brass cup was measured with a platinum-platinum rhodium thermocouple which was calibrated at the boiling points of water and sulfur. The temperature as measured by this thermocouple was presumed to be the temperature of the vapor in equilibrium with the GeO. Good evidence for rapid attainment of thermal equilibrium in the cell is the fact that when the cell was lowered into the hot zone, the temperature dropped initially about 20°, but by suitable manipulation of the outside furnace temperature, it was possible to bring the temperature up to a constant value within five or ten minutes. A reasonable guess was made as to the time of starting the run, which could not be in error by more than 2-3 minutes.

The first three runs were carried out using 0.57 g. of the 89.7% pure GeO; the remaining five runs were carried out using 0.47 g. of

the 95.8% pure GeO. The details of the runs are given in Table 15 and the calculated pressures are plotted in Figure 7.

Table 15

The Vapor Pressure of GeO

| Run | Purity of GeO | T°K. | Grams effused | Time (sec.) | Calculated pressure (atm). |
|---|---|---|---|---|---|
| 1 | 89.7% | 770 | .0021 | 3600 | $1.3 \times 10^{-6}$ |
| 2 | 89.7 | 788 | .0040 | 4980 | $1.8 \times 10^{-6}$ |
| 3 | 89.7 | 816 | .0079 | 6900 | $2.6 \times 10^{-6}$ |
| 4 | 95.8% | 835 | .0100 | 2160 | $1.06 \times 10^{-5}$ |
| 5 | 95.8 | 758 | .0012 | 40300 | $6.7 \times 10^{-8}$ |
| 6 | 95.8 | 816 | .0033 | 4980 | $1.5 \times 10^{-6}$ |
| 7 | 95.8 | 790 | .0061 | 36400 | $3.7 \times 10^{-7}$ |
| 8 | 95.8 | 859 | .0064 | 1920 | $7.7 \times 10^{-6}$ |

Before runs 1 and 4, blank runs of about an hour duration were carried out in order to eliminate any volatile impurities. Despite these precautions, it is obvious from Fig. 7 that the first runs made with a fresh sample of GeO (i.e., runs 1, 2 and 4) gave decidedly high vapor pressures. This can be ascribed to loss of volatile impurities (e.g. water) and to recrystallization of the GeO to form more massive particles. Small particles and particles with jagged edges are known to have higher vapor pressures than larger, regular particles.

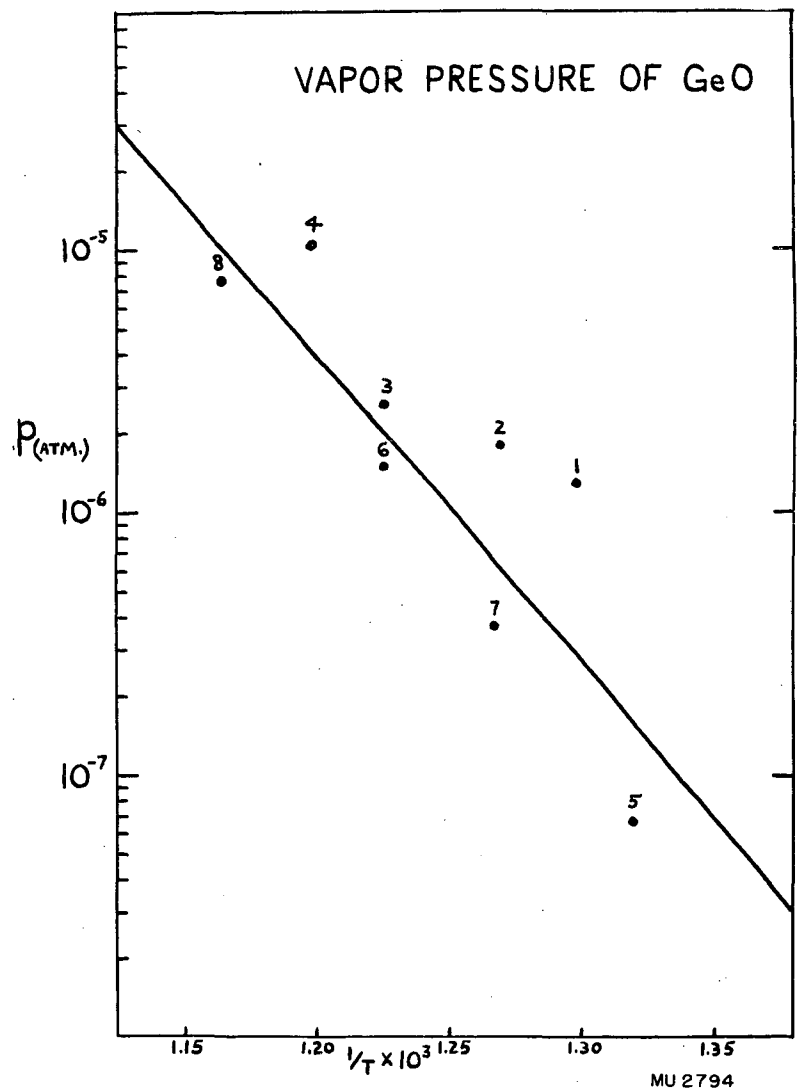
VAPOR PRESSURE OF GeO
$10^{-5}$
$10^{-6}$
$10^{-7}$
$P_{(ATM.)}$
1.15
1.20
1.25
1.30
1.35
$1/T \times 10^3$
MU 2794

Fig. 7

Calculation of Thermodynamic Quantities

As will be seen later, the measured vapor pressures probably do not represent the pressures of GeO(g) over solid GeO, but rather the pressures over a mixture of Ge(s) and $GeO_2$(s). However, calculations will be carried out assuming the solid phase to be GeO, and the results may be interpreted either way, inasmuch as the entropies and heat capacities of (1/2 Ge + 1/2 $GeO_2$) and GeO are approximately the same.

The data were not of sufficient accuracy to give both the heat and free energy of vaporization, so it was decided to estimate the entropies and heat capacities. Kelley[3] gives 53.5 for the entropy of GeO(g) at 25°, and the National Bureau of Standards Tables[4] give 7.39 for the heat capacity at constant pressure at 25°. The entropy and heat capacity of the solid at 25° were estimated to be 11.5 and 10, respectively. So for the reaction

$$GeO(s) = GeO(g)$$

$$\Delta S^{\circ}_{298} = 42 \text{ cal./deg.}$$

$$\Delta C^{\circ}_{p_{298}} = -3 \text{ cal./deg.}$$

By assuming $\Delta C^{\circ}_p$ to be constant with temperature, the quantity $\Delta H^{\circ}_0$ can be calculated from the vapor pressure data by means of the following equation:

$$\Delta H^{\circ}_0 = \Delta F^{\circ} - 6.9T\log_{10}T + 62T.$$

The quantity $\Delta H^{\circ}_0$ is not the heat of the reaction at absolute zero, since the constancy of $\Delta C^{\circ}_p$ cannot be presumed any lower than about 298°K. The reliability of the data can be tested by the constancy of $\Delta H^{\circ}_0$ when calculated from all the experimental data. Table 16 shows the results of these calculations.

Table 16

Thermodynamic Functions for the Vaporization of GeO

| Run | T°K | $\Delta F^\circ$ cal./mole | $\Delta H^\circ_0$ cal./mole |
|---|---|---|---|
| 1 | 770 | 20,740 | 53,160 |
| 2 | 788 | 20,680 | 53,790 |
| 3 | 816 | 20,820 | 55,030 |
| 4 | 835 | 19,000 | 53,940 |
| 5 | 758 | 24,860 | 56,790 |
| 6 | 816 | 21,720 | 55,930 |
| 7 | 790 | 23,220 | 56,440 |
| 8 | 859 | 20,080 | 55,960 |

The average of all eight values for $\Delta H_0^\circ$ is 55,130 ± 1,200 cal./mole. If we omit the bad runs 1, 2 and 4, the average is 56,030 ± 500 cal./mole. We shall use an intermediate value of $\Delta H_0^\circ$ = 55,500 ± 1,000 cal./mole. Hence

$$\Delta H^\circ = \Delta H_0^\circ + \Delta C_p^\circ T$$
$$= 55{,}500 - 3T$$
$$\Delta F^\circ = \Delta H_0^\circ - \Delta C_p^\circ T \ln T + IT$$
$$= 55{,}500 + 6.9\ T\log_{10}T - 62T$$
$$\Delta S^\circ = \Delta C_p^\circ + \Delta C_p^\circ \ln T - I$$
$$= 59 - 6.9 \log_{10}T$$
$$\Delta H^\circ_{298} = 54.6 \text{ kcal./mole}$$
$$\Delta F^\circ_{298} = 42.1 \text{ kcal./mole}$$
$$\Delta S^\circ_{298} = 42 \text{ cal./deg. mole}$$

Let us combine $\Delta H^\circ_{298}$ for the sublimation of GeO with several other quantities:

| Reaction | $\Delta H^\circ_{298}$(kcal./mole) | Reference |
|---|---|---|
| $GeO(g) = GeO(s)$ | -54.6 | This paper |
| $Ge(g) + O(g) = GeO(g)$ | $\geqslant$-159 | Ref. 2 |
| $Ge(s) = Ge(g)$ | 85.2 | Ref. 5 |
| $1/2O_2(g) = O(g)$ | 59.2 | Ref. 4 |
| $Ge(s) + 1/2O_2(g) = GeO(s)$ | $\geqslant$-69 | |

We find that the heat of formation of GeO is more positive than -69 kcal./mole. If we assume that the vapor pressure measurements gave the heat of the reaction

$$1/2\ Ge(s) + 1/2\ GeO_2(s) = GeO(g),$$

then we conclude that the heat of formation of $GeO_2(s)$ is more positive than -138 kcal./mole.

The Heat of Formation of GeO

Through the cooperation of Dr. K. K. Kelley and Dr. G. Humphrey, two bomb calorimeter combustions of 92% GeO were carried out. The combustions were carried out at 30°C. under 30 atmospheres of oxygen pressure. The runs were of low accuracy because approximately 3% of the GeO remained unburned and because the oxidized material, $GeO_2$, formed both a glassy pellet in the oxidation crucible and a layer of microcrystalline powder on the walls of the bomb. After correcting for the $GeO_2$ impurity in the burned GeO and the incomplete combustion, we calculate $\Delta H^\circ = -69 \pm 3$ kcal./mole for the heat of combustion of GeO. Using $-130 \pm 3$ kcal./mole (Cf. Section VIII) for the heat of formation of $GeO_2$, we calculate $\Delta H_f = -61 \pm 4$ kcal./mole for the heat of formation of GeO(s). This is in agreement with the conclusions of the vapor pressure experiments and indicates that GeO(s) is thermodynamically unstable.

$$2\ GeO(s) = Ge(s) + GeO_2(s) \qquad \Delta H^\circ_{298} = -8 \pm 8 \text{ kcal./mole.}$$

The "GeO" studied was probably a mixture of Ge and $GeO_2$.

X-ray Study of GeO

The oxide used in runs 1-3 (maximum temperature 543°C.) was submitted for X-ray examination. Only two phases, Ge and $GeO_2$ were identified in the pattern. Other preparations heated to maximum temperatures of 403° and 475° were also examined. These showed lines

due to Ge and many faint lines which could be ascribed to neither Ge nor $GeO_2$. Of these unidentified lines (which may be due to GeO), two were fairly prominent and corresponded to d = 2.99Å and d = 1.83Å.

Another preparation of GeO was heated to various temperatures and X-ray spectra were taken after various high-temperature treatments. The thermal history of each sample and the intensity of the "unidentified" lines are given in Table 17. Each of the samples gave strong lines of Ge (diamond cubic symmetry).

The X-ray studies definitely bear out the thermal data; solid GeO appears to be unstable with respect to disproportionation. In this respect GeO resembles both SiO and SnO.

Table 17

X-ray Examination of GeO

| Thermal History | Intensity of "Unidentified" Lines |
|---|---|
| Heated at 460° for one half hour; cooled slowly | Many weak lines |
| Heated at 520° for two hours; cooled rapidly | A few very weak lines |
| Heated at 580° for one half hour; cooled rapidly | A few very weak, broad lines |

## REFERENCES


1. Brewer, L. and Mastick, D., J. Chem. Phys. 19, 834-43 (1951).
2. Herzberg, G., "Molecular Spectra and Molecular Structure, I. Spectra of Diatomic Molecules," Van Nostrand, New York, 1950.
3. Kelley, K. K., Bureau of Mines Bulletin 477 (1948).
4. National Bureau of Standards Selected Values of Chemical Thermodynamic Constants, Washington, D. C., 1947 et seq.
5. Searcy, A. W., UCRL-1403 (1951).

# VII. HCl - OXIDE EQUILIBRIA

## HCl - $GeO_2$ Equilibrium

A preliminary experiment was carried out to determine whether gaseous hydrogen chloride reacts with solid $GeO_2$ at an appreciable rate at 211°C. Dry HCl gas was passed over solid $GeO_2$ contained in a glass tube held at 211°C., but no appreciable loss of $GeO_2$ occurred. The slow rate is attributed to the strong Ge-O bonds in the oxide.

A quartz tube (cf. Figure 8) equipped with a U-tube was charged with some dry germanic oxide and filled with dry HCl gas (23.05 cm. pressure at 298°K.). The side U-tube contained mercury; the capillary tubing connecting this U-tube with the main reaction tube was heated to 100°C. and insulated. The dead space contained in this capillary was negligible compared with the volume of the reaction chamber, and pressures were not corrected for this dead space. The mercury U-tube was used as a pressure gauge; when the mercury columns were at the same height, the pressure inside the reaction chamber was known to be the same as that in the system beyond the U-tube. The temperature of the furnace was controlled by varying the applied voltage, using a Variac and Sola transformer. The temperature was measured with a platinum-rhodium, platinum thermocouple. The pressures recorded at various temperatures are given in Table 18. The ratios of the actual pressures to those calculated assuming the HCl to be an inert ideal gas are also given. It can be seen that above 570°C., the pressures are low by a factor of about 0.75, corresponding to the reaction

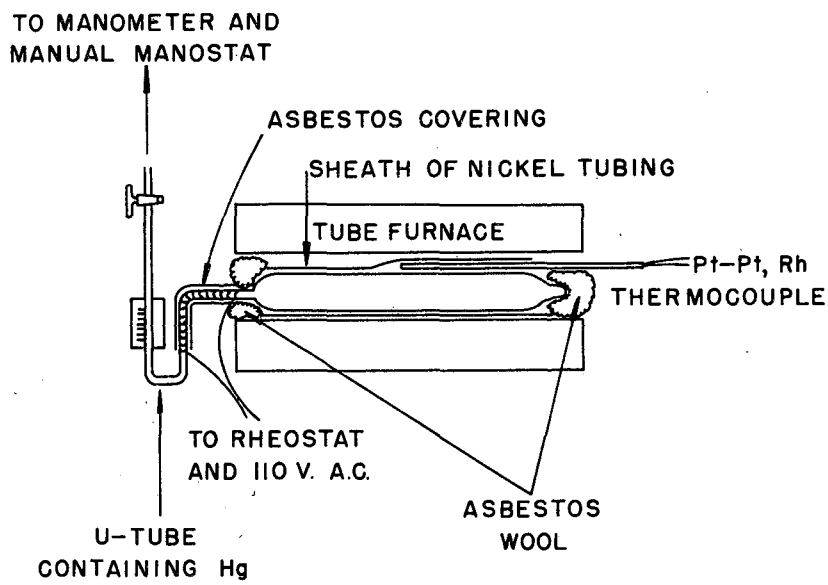


APPARATUS FOR STUDYING STATIC EQUILIBRIA BETWEEN HCl GAS AND GERMANIUM OXIDES

MU2789

Fig. 8

$$GeO_2(s) + 4HCl(g) = GeCl_4(g) + 2H_2O(g).$$

We conclude that the reaction is essentially complete up to the highest temperature investigated, 1363°K. The experiment shows that there was no oxy-chloride formation under the pressures studied.

Table 18

Pressure-Temperature Data

| T°K | Pressure, cm. Hg. | Ratio: Pressure/"Inert Ideal gas pressure" |
|---|---|---|
| 298 | 23.05 | 1.000 |
| 389 | 30.0 | .997 |
| 588 | 44.85 | .986 |
| 843 | 49.8 | .764 |
| 1288 | 79.1 | .794 |
| 403 | 23.0 | .738 |
| 401 | 23.55 | .760 |
| 814 | 49.4 | .784 |
| 1083 | 64.6 | .771 |
| 1363 | 81.2 | .770 |

HCl - GeO Equilibrium

A glass tube similar to that shown in Figure 8 was charged with some dry GeO. When HCl gas was admitted, reaction commenced immediately, and hence the amount of HCl introduced was not known accurately. However, immediately after putting the HCl in the reaction chamber, the system was sealed off, and it was hoped that

negligible amounts of reaction products diffused out. The pressure was recorded as a function of temperature; in Table 19 the results of two runs are given. The pressure at the highest temperatures investigated in each run was taken as the "pressure of an inert ideal gas", and the ratios of the actual pressures to the pressures of this ideal gas were calculated for the other temperatures. It can be seen that at lower temperatures some reaction involving a dimunition in volume took place. Any +4 oxide impurity in the GeO should have no effect in these experiments; the results of the first part of this section indicate that, at the temperature investigated in these experiments, no reaction between $GeO_2$ and HCl occurs. The very low temperature pressures (below 370°K.) are probably low because of condensation of the reaction products.

An experiment similar to the preceding two was carried out--differing in that the amount of HCl gas originally present was known. A bulb containing a known amount of pure, dry HCl was connected to the evacuated reaction vessel containing the GeO. The HCl was then condensed in the reaction vessel by cooling the reaction vessel in liquid nitrogen, and the external system was sealed off. The pressure was measured as a function of temperature. Table 20 gives the experimental data as well as the calculated pressures of HCl (known from the amount of HCl introduced and the volume of the apparatus), assuming no reaction of the HCl. It appears that some reaction caused a dimunition in volume even at the highest temperature, 275°C.

These static experiments are not of much value because of the limited temperature ranges studied. Lower temperatures are impossible unless very low pressures are employed (because of condensation of

Table 19

Temperature-Pressure Data

| T°K. | Pressure in cm. | Ratio: Pressure/"Ideal gas pressure" |
|---|---|---|
| 352 | 9.6 | .41 |
| 401 | 21.15 | .80 |
| 474 | 31.0 | .99 |
| 407 | 24.2 | .90 |
| 357 | 12.1 | .51 |
| 561 | 37.15 | 1.00 |
| 339 | 11.7 | .52 |
| 551 | 61.6 | 1.00 |
| 535 | 61.2 | 1.02 |
| 508 | 58.5 | 1.03 |
| 484 | 56.3 | 1.04 |
| 448 | 51.7 | 1.03 |
| 402 | 46.0 | 1.02 |
| 390 | 43.0 | .99 |
| 375 | 38.1 | .91 |
| 353 | 30.1 | .76 |
| 347 | 28.5 | .73 |
| 331 | 24.8 | .67 |
| 313 | 22.3 | .64 |

Table 20

Temperature-Pressure Data

| T°K. | Pressure in cm. | Pressure if HCl inert | Ratio: Pressure/"Ideal gas pressure" |
|---|---|---|---|
| 548 | 52.7 | 72.6 | .73 |
| 525 | 50.5 | 69.5 | .73 |
| 497 | 47.4 | 65.8 | .72 |
| 470 | 44.4 | 62.2 | .71 |
| 451 | 42.5 | 59.7 | .71 |
| 417 | 39.1 | 55.2 | .71 |
| 369 | 30.7 | 48.8 | .63 |
| 350 | 26.7 | 46.3 | .58 |

the reaction products), and higher temperatures are impossible because then $GeO_2$ (impurity in the GeO) would begin to react with the HCl.

No definite conclusions can be drawn from the data; possibly a number of reactions are taking place at the same time, e.g.

$$GeO + 3\ HCl = GeHCl_3 + H_2O$$

$$4GeO + 12HCl = GeH_4 + 3GeCl_4 + 4H_2O$$

$$2GeO + 6HCl = GeH_2Cl_2 + GeCl_4 + 2H_2O.$$

Simple pressure-temperature studies cannot distinguish these reactions, because in each case the ratio of volume of reactants to volume of products is the same.

# VIII. THE HEAT OF OXIDATION OF GERMANIUM

The heat of oxidation of germanium to germanic oxide by oxygen has been measured by Becker and Roth[1] and Hahn and Juza[3]. These investigators found the heat of formation of $GeO_2(s)$ to be -128.4 kcal./mole. It was considered desirable, however, to check this value by measuring the heat of oxidation of the metal by some aqueous oxidizing agent.

Germanium is a hard, brittle and relatively inert metal. Some idea of the chemical inactivity of the metal may be obtained from the following quotation from Hopkins[4]: "The following reagents, (at room temp. for one week or at 90° for eight hours) have no effect on metallic germanium: water, 50% NaOH, conc. HCl, 1:1 HCl, 1:1 sulfuric acid. Ten percent NaOH tarnishes the metal as does concentrated nitric acid. More dilute nitric acid forms a coating of germanium dioxide on the metal. Concentrated sulfuric acid and hydrofluoric acid slightly attack the metal, while 3% hydrogen peroxide is the best solvent."

Indeed, hydrogen peroxide does dissolve germanium, but it is an unsuitable oxidizing agent for calorimetry because it rapidly decomposes in the presence of the metal. Some preliminary experiments were carried out on some roughly ground germanium particles in an attempt to find a suitable oxidizing agent. No oxidizing agent was found to be rapid enough. It was finally found that when the metal is very finely pulverized, an alkaline solution of hypochlorite effects complete solution in a relatively short time. High alkalinity is probably necessary in order to dissolve any

oxide which forms on the surface of the metal.

The hypochlorite solution was prepared by passing chlorine into approximately 0.8 molar potassium hydroxide. The hypochlorite content was then determined volumetrically using a standard thiosulfate solution. Three such batches of hypochlorite solution were prepared; each batch was used for a separate series of runs. In each of these series, two measurements were made of the heat of solution of metallic germanium and at least one measurement was made of the heat of solution of germanic oxide. These heats refer to the following reactions:

$$\Delta H_1: \quad Ge(s) + 2ClO^-(sol'n.) = GeO_2(sol'n.) + 2Cl^-(sol'n.)$$

$$\Delta H_2: \quad GeO_2(s) = GeO_2(sol'n.)$$

The first heat minus the second give $\Delta H_3$, the heat of the reaction

$$\Delta H_3: \quad Ge(s) + 2ClO^-(sol'n.) = GeO_2(s) + 2Cl^-(sol'n.)$$

In subsequent calculations, the heats of formation of $ClO^-$(sol'n.) and $Cl^-$(sol'n.) are taken to be the same as those in infinitely dilute aqueous solution.

The germanic oxide used was obtained from the Fairmount Chemical Co. (purest - As free). It was dried before use by heating at 900° for several hours.

Some spectroscopically pure germanium powder was obtained from the Belmont Chemical Co. (New York). That which passed through a 400 mesh sieve was used in the calorimetric experiments. The metal completely dissolved in the calorimeter in about 20 minutes; this rather long time is responsible for most of the uncertainties in heats. Unfortunately, the metal used in all the runs did not come

from the same sieving. The first two runs with the metal, runs 13 and 14, were carried out using unanalyzed material. The remaining runs, however, were carried out using analyzed metal from one sieving. The sieved metal of runs 13 and 14 probably differed very little from the metal of the remaining runs, because the sievings were carried out using portions of the same batch of powder. (The unpassed powder was not returned to the larger batch). We shall therefore include the data of runs 13 and 14, but weight the results one half.

The sieved metal was analyzed by oxidizing with hydrogen peroxide and then igniting to the oxide. The entire impurity is assumed to be $GeO_2$. The results of four separate analyses gave for %Ge: 89.7%, 89.7%, 89.1% and 90.1%. We shall use 89.65 ± .25%. The heats were therefore corrected assuming 10.35% of the material to be $GeO_2$.

The calorimetric experiments were carried out at 25 ± 1°C.

From the data in Table 21 we calculate as a weighted average $\Delta H_3 = -159.4 \pm 2.4$ kcal./mole. The National Bureau of Standards[5] gives -27.83 kcal./mole as the heat of formation of HClO(1000 $H_2O$). Pitzer[6] tabulated 3.32 kcal./mole as the heat of ionization of HClO; hence $\Delta H_f = -24.5$ kcal./mole for $ClO^-$. Bichowsky and Rossini[2] give -25.9 for 18°C. Using $\Delta H_f = -40.02$ kcal./mole for $Cl^-$, we calculate $\Delta H_f = -128.4$ for $GeO_2(s)$ (using -24.5 for $ClO^-$) and $\Delta H_f = -131.2$ kcal./mole for $GeO_2(s)$ (using -25.9 for $ClO^-$). Actually the more negative value is probably more nearly correct. It will be noted that runs 16, 19 and 22 agree very well, and the $\Delta H_3$ values for these runs are higher than those of the other runs. We shall finally take $\Delta H_f = -130 \pm 3$ for the heat of formation of $GeO_2(s)$.

Table 21

Calorimetric Experiments

| Run | Grams of Material | Hypochlorite Solution | | Calories per gram (uncorr.) | Corrected heats | | |
|---|---|---|---|---|---|---|---|
| | | Molarity of KOH | Molarity of $ClO^-$ | | $\Delta H_1$ | $\Delta H_2$ | $\Delta H_3$ |
| 12 | .2723 g. $GeO_2$ | .84 | .076 | 81.4 | | -8.5 | |
| 13 | .0720 g. Ge | .84 | .076 | 2,017 | -162.7 | | -154.2 |
| 14 | .0727 g. Ge | .84 | .076 | 2,071 | -167.1 | | -158.6 |
| 11 | .1467 g. $GeO_2$ | .84 | .076 | 80.0 | | -8.4 | |
| 16 | .0978 g. Ge | 0.8 | .039 | 2,108 | -170.0 | | -161.0 |
| 19 | .1151 g. Ge | 0.8 | .039 | 2,115 | -170.5 | | -161.5 |
| 20 | .6728 g. $GeO_2$ | 0.8 | .039 | 86.2 | | -9.0 | |
| 21 | .1066 g. Ge | 0.8 | .081 | 2,053 | -165.5 | | -156.5 |
| 22 | .0818 g. Ge | 0.8 | .081 | 2,117 | -170.7 | | -161.7 |
| 23 | .1923 g. $GeO_2$ | 0.8 | .081 | 85.7 | | -9.0 | |

## REFERENCES


1. Becker, G. and Roth, W. A., Z. physik. Chem. A 161, 69 (1932).
2. Bichowsky and Rossini, "Thermochemistry of Chemical Substances," Reinhold, New York, 1936.
3. Hahn, H., and Juza, R., Z. anorg. allgem. Chem. 244, 120 (1940).
4. Hopkins, B. Smith, "Chapters in the Chemistry of the Less Familiar Elements," Stipes Publ. Co., Champaign, Ill., Vol. I, 1939.
5. National Bureau of Standards Selected Values of Chemical Thermodynamic Constants, Washington, D. C., 1947 et seq.
6. Pitzer, K., J. Am. Chem. Soc. 59, 2368 (1937).

# IX. ABSORPTION AND RAMAN SPECTRA OF GERMANIC IODIDE

## Absorption Spectra

Dennis and Hance[1] reported the colors of solutions of $GeI_4$ in various organic solvents. Colors ranging from pale yellow to red were reported. The results of this section lead to the conclusion that some of the orange and red colors observed by Dennis and Hance were not caused by $GeI_4$ alone, but by a mixture of $GeI_4$ and iodine.

Solutions of $GeI_4$ in benzene, hexane, carbon tetrachloride and chloroform are yellow. When these solutions are allowed to stand open to the air, they gradually turn orange-red. The latter color is due to oxidation of the iodide to iodine; the yellow color of the $GeI_4$ and the purple color of the iodine yield orange-red. (Probably completely anhydrous solutions would not change color in the presence of dry air).

The absorption spectra of $GeI_4$ in $CCl_4$, benzene and hexane were determined with a Cary Recording Spectrophotometer (Model 11, Serial 4) using a 1.000 cm. quartz cell. The spectra of these solutions were very similar; each exhibited absorption maxima at approximately 2800 Å and 3600 Å. The carbon tetrachloride and benzene were of C. P. Reagent grade; the impurity of the hexane was unknown. Solutions were made by weighing out samples of recrystallized $GeI_4$ and dissolving in known volumes of solvent. The extinction coefficients (liter/cm.-mole) at the absorption maxima are given in Table 22. The values are accurate to ±5%. No rigorous test of Beer's Law was made.

Table 22

Extinction Coefficients of $GeI_4$

| Solvent | Wavelength, Angstroms | Extinction Coefficient |
|---|---|---|
| $CCl_4$ | 3600 | 6200 |
| $CCl_4$ | 2820 | 4100 |
| Hexane | 3570 | 6500 |
| Hexane | 2820 | 4500 |
| Benzene | 3600 | 7200 |
| Benzene | 2950 | 8300 |

The color of solid germanic iodide is markedly dependent on the temperature.[1] At 0°C. it is yellow, at room temperature it is orange and at 100°C. it is dark red. An attempt was made to measure the absorption spectrum of the solid using the Cary Spectrophotometer. (The solid was crystallized out from carbon tetrachloride on the faces of a quartz absorption cell). The resulting spectrum was very indistinct; only a broad maximum at approximately 3850 Å was discernible. In order to obtain a sharp absorption spectrum, it would be necessary to grow a large crystal and polish it down to a thickness of about 0.2 mm.

An experiment was performed in order to determine whether the absorption spectrum of $GeI_4$ in hexane changes with temperature. By using a quartz dewar absorption cell, and by cooling the hexane solution of $GeI_4$ with dry ice, the absorption spectrum was obtained

at -50°C. There was no significant difference between the low temperature spectrum and the room temperature spectrum; the apparent extinction coefficients increased, of course, because of the contraction of the solution at the low temperature. A slight humping in the curve at about 3100 Å was observed at -50°, which was not observed at room temperature.

Raman Spectrum

The Raman spectra of $GeCl_4$ and $GeBr_4$ have been determined, but the Raman spectrum of $GeI_4$ is unknown.

An attempt was made to determine the Raman spectrum of a saturated solution of $GeI_4$ in carbon tetrachloride. A Steinheil type GH spectrograph and a Kodak 103J plate were used. The Raman cell was approximately five inches long with a diameter of one inch. Two intense mercury vapor lamps were used without any filter. An exposure of 3 1/2 hours yielded a completely blank plate up to about 5000 Å. Only the 5461, 5770 and 5791 Å mercury lines appeared. (A similar exposure using pure carbon tetrachloride gave very intense Raman lines of $CCl_4$ around the 4047 and 4358 Å mercury lines). After this 3 1/2 hour exposure, the solution of $GeI_4$ in $CCl_4$ was dark red, indicating considerable decomposition of the $GeI_4$ by the ultraviolet light. (Spectrophotometric examination of the red solution showed the characteristic peak of iodine at 5100 Å).

Using a fresh solution of $GeI_4$ and a filter of concentrated aqueous potassium chromate, another exposure of 21 hours was made. A few more mercury lines appeared on the plate, but there were no Raman lines. The chromate filter partially eliminated the decompo-

sition of the tetraiodide; not as much decomposition occurred during this 21 hour exposure as did in the previous 3 1/2 hour exposure.

The 5461 Å mercury line is the only feasible line to use for the Raman spectrum of $GeI_4$, because too much absorption occurs at shorter wavelengths. It was hoped that the near-lying absorption band would increase the Raman activity at this wavelength, but apparently it does not do so sufficiently. Ordinarily, increased exposure might be expected to bring out the Raman lines, but in this case longer exposures are precluded by the photolysis of the tetraiodide and consequent absorption in the 5461 Å region by iodine.

The use of solid $GeI_4$ at room temperature is probably impossible because the solid is orange. However, by keeping the solid at 0° or lower, a suitable Raman spectrum might be obtained, because at low temperatures solid $GeI_4$ is yellow.

## REFERENCE

1. Dennis, L. M. and Hance, F. E., J. Am. Chem. Soc. 44, 2854-60 (1922).

# X. SUMMARY AND CONCLUSIONS

In the preceding sections, thermodynamic data have been presented for various germanium compounds, and it now remains to correlate all these data in some systematic fashion. In an attempt to achieve this end, heats of formation, free energies of formation and entropies are calculated and tabulated in this section. Oxidation potential diagrams are also presented.

## Calculation and Estimation of Thermodynamic Functions

### Ge(s):

Kelley[4] gives $S^{\circ} = 10.1$ cal./deg.

### Ge(g):

Searcy[11] gives $\Delta H_f = 85.2$ kcal./mole. $S^{\circ} = 40.11$[7], hence $\Delta F_f = 76.3$ kcal./mole.

### $GeH_4$:

Kelley[4] gives $S^{\circ} = 50.6$ cal./deg.

### Ge++(aq):

The solubility of brown germanous oxide in 4 M $HClO_4$ is about $5 \times 10^{-4}$ molar at 25°C. If we assume the net reaction to be

$$GeO(brown) + 2H^+ = Ge^{++} + H_2O,$$

we calculate $K = 3 \times 10^{-5}$. Using -54.2 kcal./mole for the free energy of formation of brown GeO, we obtain $\Delta F_f = 8.6$ kcal./mole for the germanous ion. Using the method of Powell and Latimer[9], we estimate $S^{\circ} = -11$; hence $\Delta H_f = 11.6$ kcal./mole.

GeO (black):

$\Delta H_f = -61.0 \pm 4$ kcal./mole (cf. Section VI) and we estimate $S^\circ = 11.5$. Hence $\Delta F_f = -54.1$ kcal./mole.

GeO (hydrous, brown):

From Section IV, we calculate $\Delta F^\circ = -5.4$ kcal./mole for

$$GeO(brown) + H_2O = GeO_2 + 2H_2.$$

Hence $\Delta F_f = -54.2$ kcal./mole. Estimating $S^\circ = 12$, $\Delta H_f = -60.9$ kcal./mole.

GeO (hydrous, yellow):

From Section IV, we calculate $\Delta F_f = -47.0$ kcal./mole. Estimating $S^\circ = 12$, $\Delta H_f = -53.7$ kcal./mole.

GeO (g):

From Section VI, we obtain $\Delta H_f = -6.4$ kcal./mole and $\Delta F_f = -12.0$ kcal./mole. $S^\circ = 53.55$[4].

$GeI_2$ (s):

From the heat of oxidation of $GeI_2$ by triiodide (cf. Section II), we calculate $\Delta H_f = -18.6$ kcal./mole. Estimating $S^\circ = 38.5$ cal./deg.[6], we calculate $\Delta F_f = -18.8$ kcal./mole.

$GeO_2$ (s):

Becker and Roth[1] and Hahn and Juza[2] found the heat of formation of $GeO_2$(s) to be -128.4 kcal./mole.

In Section VIII, the value $\Delta H_f = -130 \pm 3$ kcal./mole was obtained.

The heats of the following reactions, when added, can be used to calculate the heat of formation of $GeO_2$(s):

| Reaction | $\Delta H^{\circ}_{298}$ | Reference |
|---|---|---|
| $2GeI_2(s) = Ge(s) + GeI_4(g)$ | 29.7 ± 1.0 | Sec. III |
| $GeI_4(g) = GeI_4(s)$ | -20.1 ± .5 | Sec. III |
| $GeI_4(s) + 3H_2O = H_2GeO_3 + 4H^+ + 4I^-$ | -9.6 ± .1 | Sec. II |
| $H_2GeO_3 = H_2O + GeO_2$ | -3.3 ± 1.0 | Sec. II |
| $10I^- + 8H^+ + 2GeO_2 =$ | | |
| $2GeI_2(s) + 2I_3^- + 4H_2O$ | 58.6 ± 2.8 | Sec. II |
| $4H^+ + 6I^- + GeO_2 = 2H_2O + Ge + 2I_3^-$ | 55.3±3.2 | |

Employing known heats of formation[7], we calculate $\Delta H_f = -136.5 \pm 3.2$ kcal./mole. The latter value is probably the least accurate of the three, and we shall use $\Delta H_f = -130 \pm 2$ kcal./mole. Using Latimer's tables[6], $S^{\circ} = 13$ cal./deg., hence $\Delta F_f = -116.3$ kcal./mole.

$H_2GeO_3$ (aq):

From Section II, $\Delta H^{\circ} = 3.3$ kcal./mole for the dissolution of $GeO_2$. Hence $\Delta H_f = -195.0$ kcal./mole for $H_2GeO_3(aq)$. From Section II, $S^{\circ} = 34.5$ cal./deg., hence $\Delta F_f = -171.1$ kcal./mole.

$HGeO_3^-$(aq):

Using Pitzer's rule[8], we estimate $\Delta S^{\circ} = -22$ cal./deg. for

$$H_2GeO_3 = H^+ + HGeO_3^-.$$

$\Delta F^{\circ} = 11.7$ kcal./mole[5]. Hence $\Delta F_f = -159.4$ kcal./mole, $\Delta H_f = -189.9$ kcal./mole and $S^{\circ} = 12.5$ cal./deg.

$GeO_3^=$(aq):

We estimate $\Delta S^{\circ} = -30$ cal./deg for $HGeO_3^- = H^+ + GeO_3^=$.

$\Delta F^\circ = 17.4$ kcal./mole[5]. Hence $\Delta F_f = -142.0$ kcal./mole, $\Delta H_f = -181.4$ kcal./mole and $S^\circ = -17.5$ cal./deg.

Then one calculates $\Delta H^\circ = -9.7$ kcal./mole for the reaction

$$GeO_2 + 2OH^- = GeO_3^= + H_2O.$$

This is in reasonable accord with the results of Section VIII, where an average value of -8.7 kcal./mole was found for essentially this reaction. In fact the experimental value would be expected to be somewhat more positive, inasmuch as the above reaction only accounts for about 90% of the net reaction in the experiments of Section VIII. Some 10% of the oxide dissolved to form the $HGeO_3^-$ ion in those experiments.

<u>$Ge_3N_4$ (s):</u>

Hahn and Juza[2] give $\Delta H_f = -15.6$ kcal./mole. Estimating $S^\circ = 30$, we calculate $\Delta F_f = 11.8$ kcal./mole.

<u>$GeCl_4$ (l):</u>

Roth and Schwartz[10] found $\Delta H^\circ = -22.5$ kcal./mole for

$$GeCl_4(l) + 3H_2O = H_2GeO_3(aq) + 4H^+ + 4Cl^-.$$

Hence $\Delta H_f = -127.7$ kcal./mole for $GeCl_4(l)$. Kelley[3] gives $\Delta S^\circ_{298} = 22.9$ cal./deg. for the vaporization of $GeCl_4$ and in Section III we calculated the entropy of $GeCl_4(g)$ to be 83.0. Hence $S^\circ_{298} = 60$ for $GeCl_4(l)$ and $\Delta F_f = -110.8$ kcal./mole.

<u>$GeCl_4$ (g):</u>

Using the data in Kelley[3] we calculate $\Delta H_f = -119.6$ kcal./mole, $\Delta F_f = -109.5$ kcal./mole and $S^\circ = 83.0$ (Section III).

These data lead to $\Delta F^\circ = 0$ at 930°K. for the reaction

$$GeO_2(s) + 4HCl(g) = GeCl_4(g) + 2H_2O(g),$$

whereas the one experiment of Section VII leads to 1363°K. as a lower limit for the temperature at which $\Delta F^\circ = 0$. If the error were entirely in the heat, the error would amount to almost 8 kcal./mole. Perhaps this is not too unreasonable, inasmuch as the heat given by Roth and Schwartz for the hydrolysis of $GeCl_4(l)$ was the result of only one experiment. It seems that the $GeO_2$ - HCl(g) equilibrium warrants further study.

$GeBr_4(s)$:

By estimating the entropy of fusion to be 6 cal./deg. and by using the entropy value given below for the liquid, we calculate $S^\circ = 62$ cal./deg. for the solid. (Using Latimer's tables[6], we calculate $S^\circ = 51.3$).

$GeBr_4(l)$:

Germanic bromide melts at 26.1°C., but from Kelley's[3] data we can calculate $S^\circ = 68.4$ cal./deg. for the supercooled liquid.

$GeBr_4(g)$:

From Section III, $S^\circ = 94.8$ cal./deg.

$GeI_4(s)$:

From Section II, $\Delta H^\circ = -9.6$ kcal./mole for the hydrolysis of $GeI_4$; hence $\Delta H_f = -34.0$ kcal./mole. $S^\circ = 70$ cal./deg. (cf. Section III), and therefore $\Delta F_f = -35.2$ kcal./mole.

$GeI_4(g)$:

From the data in Section III, we calculate $\Delta H_f = -13.9$ kcal./mole, $\Delta F_f = -26.2$ kcal./mole and $S^\circ = 107$ cal./deg.

Table 23

Thermodynamic Functions at 298.16°K.

(Energies in kcal./mole and entropies in cal./deg.)

| Compound | Physical State | $\Delta F_f^\circ$ | $\Delta H_f^\circ$ | $S^\circ$ |
|---|---|---|---|---|
| Ge | metal | 0 | 0 | 10.1 |
| Ge | gas | 76.3 | 85.2 | 40.11 |
| $GeH_4$ | gas | | | 50.6 |
| $Ge^{++}$ | aqueous | (8.6) | (11.6) | (-11) |
| GeO | black solid | -54.1 | -61.0 | 11.5 |
| GeO | hydrous, brown | -54.2 | -60.9 | 12 |
| GeO | hydrous, yellow | -47 | -54 | 12 |
| GeO | gas | -12.0 | -6.4 | 53.55 |
| $GeI_2$ | crystal | -18.8 | -18.6 | 38.5 |
| $GeO_2$ | crystal(soluble) | -116.3 | -130.0 | 13 |
| $H_2GeO_3$ | aqueous | -171.1 | -195.0 | 34.5 |
| $HGeO_3^-$ | aqueous | -159.4 | -189.9 | 12.5 |
| $GeO_3^{--}$ | aqueous | -142.0 | -181.4 | -17.5 |
| $Ge_3N_4$ | solid | 11.8 | -15.6 | 30 |
| $GeCl_4$ | liquid | -110.8 | -127.7 | 60 |
| $GeCl_4$ | gas | -109.5 | -119.6 | 83.0 |
| $GeBr_4$ | crystal | | | 62 |
| $GeBr_4$ | liquid | | | 68.4 |
| $BeBr_4$ | gas | | | 94.8 |
| $GeI_4$ | crystal | -35.2 | -34.0 | 70 |
| $GeI_4$ | gas | -26.2 | -13.9 | 107 |

## Potentials in Acid Solution

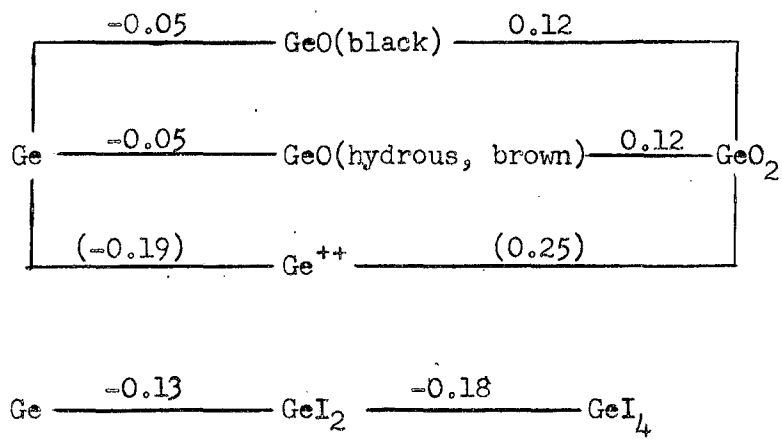


## Potentials in Basic Solution

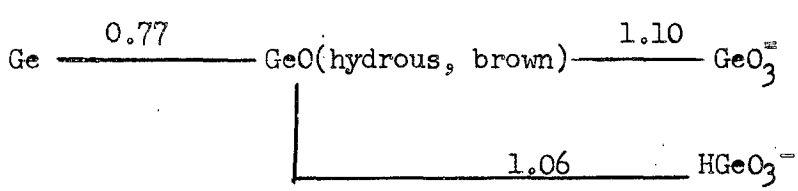

# ACKNOWLEDGEMENTS

The author is indebted to numerous people for help given during the progress of this research problem. Foremost is Professor Wendell M. Latimer, who not only proposed this study of germanium chemistry and gave valuable suggestions throughout its course, but also inspired the author to deviate at times in order to investigate various interesting side problems. Dr. Z Z. Hugus has been a constant source of information and was particularly helpful in teaching the author how to use the calorimeter. Many thanks are given to Professor Leo Brewer, Dr. John Margrave, Mr. Guy Elliott, Mrs. C. H. Dauben, Mrs. H. Ruben, Mrs. R. Cooper, Dr. K. K. Kelley and Dr. G. Humphrey for the assistance they have cheerfully given.

## REFERENCES


1. Becker, G. and Roth, W. A., Z. physik. Chem. A 161, 69 (1932).
2. Hahn, H. and Juza, R., Z. anorg. allgem. Chem. 244, 120 (1940).
3. Kelley, K. K., Bureau of Mines Bulletin 383, 1935.
4. Kelley, K. K., Bureau of Mines Bulletin 477, 1948.
5. Latimer, W. M, "The Oxidation States of the Elements and Their Potentials in Aqueous Solutions," Prentice-Hall, New York, 1938.
6. Latimer, W. M., J. Am. Chem. Soc. 73, 1480 (1951).
7. National Bureau of Standards Selected Values of Chemical Thermodynamic Constants, Washington, D. C., 1947 et. seq.
8. Pitzer, K. S., J. Am. Chem. Soc., 59, 2365 (1937).
9. Powell, R. E. and Latimer, W. M., J. Chem. Phys. 19, 1139-41 (1951).
10. Roth, W. A. and Schwartz, O., Z. physik. Chem. 134, 466 (1927).
11. Searcy, A. W., UCRL-1403 (1951).