UCRL- 1639

DECLASSIFIED

UNIVERSITY OF CALIFORNIA — BERKELEY

TWO-WEEK LOAN COPY

This is a Library Circulating Copy which may be borrowed for two weeks. For a personal retention copy, call Tech. Info. Division, Ext. 5545

RADIATION LABORATORY

DISCLAIMER

This document was prepared as an account of work sponsored by the United States Government. While this document is believed to contain correct information, neither the United States Government nor any agency thereof, nor the Regents of the University of California, nor any of their employees, makes any warranty, express or implied, or assumes any legal responsibility for the accuracy, completeness, or usefulness of any information, apparatus, product, or process disclosed, or represents that its use would not infringe privately owned rights. Reference herein to any specific commercial product, process, or service by its trade name, trademark, manufacturer, or otherwise, does not necessarily constitute or imply its endorsement, recommendation, or favoring by the United States Government or any agency thereof, or the Regents of the University of California. The views and opinions of authors expressed herein do not necessarily state or reflect those of the United States Government or any agency thereof or the Regents of the University of California.

UCRL-1639
Chemistry-General Distribution

UNIVERSITY OF CALIFORNIA

DECLASSIFIED

Radiation Laboratory

Contract No. W-7405-eng-48

STUDIES OF MATERIALS AT HIGH TEMPERATURES

Russell Keith Edwards

March 12, 1952

CLASSIFICATION CANCELLED
BY AUTHORITY OF THE DECLASSIFICATION
BRANCH USAEC ON 4-23-52
DATE
B. Fockett
SIGNATURE OF THE
PERSON MAKING THE
CHANGE

Berkeley, California

Standard Distribution: Series A	Copy Nos.
American Cyanamid Company (Watertown)	1
Aircraft Nuclear Propulsion Project	2 - 4
Argonne National Laboratory	5 - 12
Armed Forces Special Weapons Project (Sandia)	13
Armed Forces Special Weapons Project (Washington)	14
Army Chemical Center	15
Atomic Energy Commission, Washington	15 - 20
Battelle Memorial Institute	21
Brookhaven National Laboratory	22 - 24
Carbide and Carbon Chemicals Company (C-31 Plant)	25 - 26
Carbide and Carbon Chemicals Company (K-25 Plant)	27 - 30
Carbide and Carbon Chemicals Company (ORNL)	31 - 38
Carbide and Carbon Chemicals Company (Y-12 Area)	39 - 42
Chicago Patent Group	43
Chief of Naval Research	44
Dow Chemical Company (Pittsburg)	45
Dow Chemical Company (Rocky Flats)	46
duPont Company	47 - 51
H. K. Ferguson Company	52
General Electric Company, Richland	53 - 58
Hanford Operations Office	60 - 63
Iowa State College	64
Knolls Atomic Power Laboratory	65 - 68
Los Alamos	69 - 71
Mallinckrodt Chemical Works	72
Massachusetts Institute of Technology	73
Mound Laboratory	74 - 76
National Advisory Committee for Aeronautics	77
National Bureau of Standards	78
National Lead Company	79
Naval Medical Research Institute	80
Naval Research Laboratory	81
New Brunswick Laboratory	82
New York Operations Office	83 - 84
North American Aviation, Inc.	85 - 86
Patent Branch, Washington	87
Savannah River Operations Office	88
Sylvania Electric Products, Inc.	89
U. S. Naval Radiological Defence Laboratory	90
UCLA Medical Research Laboratory (Warren)	91
University of California Radiation Laboratory	92 - 95
University of Rochester	96 - 97
Vitro Corporation of America	98 - 99
Western Reserve University (Friedell)	100
Westinghouse Electric Corporation	101 - 102
Wright Air Development Center	103 - 105
Technical Information Service, Oak Ridge	106 - 120

INTRODUCTION

This thesis embodies three somewhat unrelated studies and is therefore divided into three sections, each of which is complete in itself. In the first section a study of the intermetallic phases in the system U-Bi is presented. The second second section describes a liquid sodium pump which as been developed, and which, through its capacity for removal of oxidizing gases makes possible the maintaining of very high purity inert atmospheres in working chambers where highly reactive materials must be handled. The third section presents a study of the stability of solid and gaseous SiO.

ACKNOWLEDGMENT

I wish to acknowledge my indebtedness to Professor Leo Brewer under whose direction these studies have been conducted. I wish also to express my gratitude to Professor Wendell M. Latimer.

These researches have been supported by an American Chemical Society Predoctoral Fellowship (3 years) and by the U. S. Atomic Energy Commission through the Radiation Laboratory of the University of California.

Table of Contents

Page

I. The Crystal Structure of UBi..... 1

Introduction..... 1

Preparation of Alloys..... 1

Preparation of Powder Specimens for X-ray Study..... 2

Diffraction Results..... 4

Table I. Results of X-ray Analysis of Alloys... 5

Table II. Powder Diffraction Data for UBi..... 7

Table III. Diffraction Data for Phase "B"..... 8

Table IV. Diffraction Data for Phase "A".....10

Table V. Diffraction Data for Phase "C".....11

II. Liquid Sodium Pump for the Purification of Inert Atmospheres..... 1

Table I. The Dynamic Vacuum Pressure Equivalent in Reactivity to Various Dry-box Atmospheres..... 6

III. Silicon Monoxide Stability of the Solid, Heat of Formation and Dissociation Energy of the Gas.... 1

Preparation and Properties of Silicon Monoxide Solid..... 4

Composition of SiO Solid..... 9

Table of Contents (cont.)

Page

Crystal Structure of Solid SiO..... 11

Table I. X-ray Diffraction Data of Inuzuka..... 13

Table II. Comparison of Inuzuka's Observed and Calculated Data..... 14

Table III. Comparison of Inuzuka's Diffraction Pattern for SiO with Those of Si, SiC, and SiO_2..... 16

Disproportionation of Silicon Monoxide Solid Due to Heat Treatments..... 18

Heat of Formation of SiO Solid..... 20

Estimation of the Entropy and Stability of SiO Solid at the Temperatures 298°K. and 1200°K..... 22

Table IV. Comparison of Entropies with Estimates by Latimer Method..... 23

Table V. ΔS°_{298} of Formation of Oxides of Group IV..... 25

Table VI. ΔS°_{1200} of Formation of Oxides of Group IV..... 28

Recalculation and Correlation of Existing Thermodynamic and Thermochemical Data..... 29

Thermodynamic Functions..... 30

Table VII. Thermodynamic Functions for Gaseous SiO..... 32

Thermochemical Data Used..... 34

Form of Presentation of Equilibria Calculations..... 36

Data of Gel'd and Kochnev..... 37

Table VIII..... 38

Data of Grube and Speidel..... 39

Table IX..... 40

Data of Schäfer and Hörnle..... 41

Table X..... 43

Table of Contents (cont.)

Page

Data of Brewer and Mastick..... 44

Table XI. Calculation of Effusion Data of Brewer and Mastick..... 45

Summary..... 46

Table XII..... 47

Experimental (A)..... 49

X-ray Diffraction Studies on ($Si+SiO_2$) Mixture at High Temperatures..... 49

Materials..... 49

Equipment..... 49

Preliminary Preparation of Materials..... 51

Table XIII..... 52

Table XIV..... 54

Experimental (B)..... 57a

Melting Point of the Mixture ($Si+SiO_2$)..... 57a

Method..... 57a

Discussion..... 57a

Experimental (C)..... 58

Quenching Studies on the Mixture ($Si+SiO_2$)..... 58

Discussion..... 58

Experimental (D)..... 59

Thermoelectrovalve Effect and the Stable Existence of Solid SiO..... 59

Introduction to the Theory of the Experimental Method..... 59

Materials..... 60

Thermoelectrovalve Experiment No. 1..... 61

Table of Contents (cont.)

Page

Table XV..... 64

Thermoelectrovalve Experiment No. 2..... 66

Table XVI..... 67

Thermoelectrovalve Experiment No. 3..... 68

Table XVII..... 70

Thermoelectrovalve Experiment No. 4..... 71

Thermoelectrovalve Experiment No. 5..... 71

Table XVIII..... 72

Correction of "Brightness Temperature" to the True Temperatures..... 74

Discussion of the Results of the Thermoelectrovalve Experiments..... 75

Appendix 1..... 78

Thermal Conductivity of the New Refractories, CeS, UC, and UN by a Relative Method..... 78

Thermal Conductivity of CeS..... 79

Thermal Conductivity of UC..... 79

Thermal Conductivity of UN..... 79

I. The Crystal Structure of UBi.

Introduction

The existence of the compound UBi was demonstrated by Ahmann and Baldwin[1] who made use of cooling curves, microscopic examination, and chemical analysis. Their X-ray results failed because of the pyrophoric nature of this material. We have prepared samples suitable for X-ray investigation and have shown that the compound has the sodium chloride structure.

Preparation of Alloys

Highest purity uranium metal of greater than 99.9 percent uranium and bismuth metal of 99.8 percent purity were used.

Charges of the metal mixtures of from 400 to 600 grams in zirconia slip-cast crucibles were first degassed for about an hour in vacuum at about 500 - 600°C. Heating was by direct induction[2] with no stirring except that produced by the induction. The further heat treatment which was done under an argon atmosphere, was varied somewhat for alloys of different compositions to provide for reasonable annealing time in the ranges of temperatures associated with transitions as were indicated in the partial phase diagram by Ahmann and Baldwin[1]. The prepared alloys were stored under inert atmospheres, usually argon. A typical heat treatment (after degassing) took 20 minutes to attain 1130°C. and an additional

---

[1] D. H. Ahmann and R. R. Baldwin, CT-2961, November 12, 1945.

[2] The apparatus is described by L. Brewer, L. A. Bromley, P. W. Gilles, and N. L. Lofgren, Declassified Atomic Energy Commission Paper MDDC-367, August 4, 1945.

40 minutes to attain 1500°C. Upon cooling the preparations were maintained for 20 to 30 minutes just under the indicated equilibrium to be attained.

Some attack on the crucible was evident from visual inspection and from X-ray analysis of samples taken from the innermost two layers of the three principal layers observed in a cross-section of a used crucible. These showed the innermost layer to consist principally of UO_2 and Bi, the next layer principally of UO_2, ZrO_2 and Bi, with the external layer ZrO_2 unattacked. The outer portions of all preparations were filed clean and discarded before samples for X-ray analysis were made in an effort to remove excessive contamination. In consideration of the relatively large volume of the preparation with respect to the exposed surface area of the crucible it was assumed that contamination of the alloys was small.

The highly pyrophoric character of the alloys required that all post-preparative handling be done in a dry-box[3] under inert atmosphere.

Preparation of Powder Specimens for X-ray Study.

The first work was on an alloy of the atom ratio U/Bi = 1/2. The drilled or filed samples, powdered in propane atmosphere, in a stainless steel mortar to pass a 140 mesh screen, were sealed in pyrex capillaries which had been dried at 100°C. for a day and left in the propane atmosphere for another day to allow the contained air to be replaced by propane. All inert gases in this work were dried through P_2O_5 before use. Four samples taken from four different levels from top to bottom all showed, on X-ray analysis, the composition to be principally UO_2 and Bi.

---

3 The dry-box used is described by L. Brewer, L. A. Bromley, P. W. Gilles, and N. L. Lofgren, Declassified Atomic Energy Commission Paper AECD-2242, October 15, 1945.

More careful specimen preparation was attempted by working in a high purity argon atmosphere. The dry-box was slowly and alternately swept with volumes of helium and argon from top and bottom inlets, respectively, in a manner to displace the dry-box contents with as little mixing as possible. Finally several volumes of argon were passed through with thorough mixing by an electric fan. Using an alloy of composition corresponding closely to UBi (see Table I) it was found that excessive oxidation still occurred as could be observed by noting the rapid darkening of a brightly filed surface. Samples of the dark dust thus obtained were shaken into capillaries and examined with X-rays. The diffraction lines found corresponded to metallic bismuth plus a phase "B" which was subsequently found (at weaker intensities) in the successfully prepared alloy X-ray specimens described later in this paper. No uranium metal or UO_2 was observed. Spectroscopic analysis of the dark dust indicated U and Bi to be the principal metallic constituents. The identity of phase "B" is discussed below.

Finally successful preparations of specimens free from oxidation were made by working in an argon atmosphere as prepared above, but in addition, scavanged of oxygen and water vapor by liquid sodium metal. The sodium metal was heated in a monel metal container so as to give a liquid surface area of about 12 square inches. A high speed electric fan was directed down on the surface and served to circulate and mix the atmosphere in the dry-box. The oxidative action was easily observed by the white coating which formed immediately on the freshly scraped bright metallic surface. The procedure was to continuously scrape the oxide surface off with a spatula to provide fresh liquid surface for further scavenging. The oxide removed also served to pick up H_2O vapor as could be seen by its wetting.

After about 6 hours of scraping an atmosphere could be obtained in which the liquid sodium metallic surface would remain bright and mirror-like for as long as 5 minutes. Furthermore the UBi compound and other alloys would show no darkening of a freshly filed bright surface. Samples of the clean alloys were then prepared and placed in specially degassed pyrex capillary tubes, stoppered, removed from the dry-box, and later sealed off in a flame and used as X-ray specimens. The capillaries had been "specially" degassed by being heated for 20 hours at 150°C. and then by being placed, hot, in a vacuum line and being evacuated at about 6×10^{-4} mm. of Hg for 4 hours. Argon was then admitted to the vacuum line to fill the capillaries and their container at 1 atmosphere, after which the container was removed from the vacuum line, covered, and placed in the dry-box. The dry-box atmosphere was then treated as above described. This somewhat tedious method was quite successful in eliminating oxidation.

Diffraction Results

Powder specimens of the compositions listed in Table I were studied by X-ray diffraction using Cu Kα X-rays filtered through nickel. Three new phases are designed "A", "B", and "C". A fourth phase, strong in samples of composition UBi and absent in all others, is attributed to UBi. Its pattern corresponds to a simple cubic lattice with a = 3.182 Å.

This very small cube is large enough for only one atom. Because of the closely 1:1 atom ratio of the compound, the somewhat different metallic radii of bismuth and uranium (1.52 and 1.42 Å respectively[4]) and their quite different valence behavior, it is most reasonable to interpret the

[4] L. Pauling, J. Am. Chem. Soc., 69, 542 (1947): values for single bond radii.

Table I. Results of X-ray Analysis of Alloys

atomic ratio, U/Bi	number of preparations	number of specimens examined	phases observed
1/1 [a]	2	2	UBi strong, "A" very weak, "B" weak
46/54	1	2	"A" strong, "B" weak
41/59	1	2	"A" strong, "B" very weak
1/2	1	1	"C" strong, "A" weak
28/72	1	1	"C" strong, Bi weak, "A" weak

[a] The alloy was prepared from U/Bi atomic ratio of 55/45, which yielded a layer of unreacted uranium (identified by X-ray analysis) and a layer of the UBi, whose composition was determined by difference from the uranium in the original mixture and that of the unreacted uranium.

diffraction pattern as due to a sodium chloride structure with a = 6.364 Å. In this case, the observed lines correspond to the reflections with even indices which should be strong. Calculation shows that the reflections with odd indices, which are due to the difference in scattering power of uranium and bismuth, are too weak to be observed. Planes with mixed indices are absent because of the face-centered structure.

The intensities of the lines due to UBi were estimated by visual comparison with a set of standard marks made with variable exposure times. Intensities were calculated for the sodium chloride structure by the equation:

$$I = p \; F_{hkl}^{2} \; \frac{1 + \cos^2 2\theta}{\sin^2\theta \cos\theta} \; 6.9 \times 10^{-7}$$

in which p is the multiplicity factor, F_{hkl} is the structure factor, and θ is the Bragg angle. The numerical factor normalizes the value to the arbitrary scale of the observed intensities, with which they are compared in Table II. The planes with mixed indices, which should all be absent, are omitted from the table. The agreement is as good as the accuracy of the intensity estimates.

The observed lattice constant, 6.364 ± 0.004 Å corresponds to a density of 11.52 ± .02 g. cm^{-3}.

The lines corresponding to phase "B" and listed in Table III were indexed on a body-centered tetragonal lattice with a = 3.95 ± 0.01 Å and c = 4.22 ± 0.01 Å. Such a cell has room for only two uranium or bismuth atoms. Intensities calculated for two uranium atoms at 000, $\frac{1}{2}\frac{1}{2}\frac{1}{2}$ are listed in Table III. They are normalized by the factor 5×10^{-6}. The observed intensities, judged by eye, are poor because they are in most cases near the limit of sensitivity of the film. The agreement is good considering these errors and the neglect of light atoms, absorption, and

Table II. Powder Diffraction Data for UBi.

	$\sin^2\theta$		Intensity	
hkl	obs.	calc.[a]	obs.	calc.
111		0.0440	0	0.3
200	0.0583	0.0587	60	56
220	.1174	.1174	40	41
311		.1614	0	0.2
222	.1769	.1761	10	15
400	.2346	.2348	10	8
331		.2788	0	0.08
420	.2936	.2934	20	20
422	.3516	.3521	15	18
511, 333		.3961	0	0.06
440	.4698	.4695	5	5
531		.5135	0	0.06
600,442	.5291	.5282	15	11
620	.5868	.5869	15	8
533		.6309	0	0.02
622	.6450	.6456	15	8
444	.7053	.7043	3	3
711, 551		.7483	0	0.05
640	.7630[b]	.7630	10	9
642	.8204[b]	.8217	20	20
731, 553		.8656	0	0.1
800	.9400[b]	.9390	3	4

[a] $\underline{a} = 6.364 \pm 0.004$ Å (Cu Kα = 1.5418 Å)

[b] very diffuse

Table III. Diffraction Data for Phase "B".

tetragonal	$\sin^2\theta$		intensities		
hkl	obs.[a]	calc.[c]	obs.[a]	obs.[b]	calc.
101	0.0711	0.0715	10	10	24
110	.0768	.0762	5[d]	3	12
002	.1340	.1336	3	3	3
200	.1527	.1524	3	4	4
112	.2096	.2098	6	5	5
211	.2239	.2239	8	7[d]	10
202	.2860	.2860	3	3[d]	3
220		.3048	<3	<3	1
103	.3385	.3387	3	-d	2
301	.3778	.3763	5	3	4
310		.3810			
222		.4384	<3	3	2
213	.4902	.4911	4	3	3
312	.5152	.5146	3	3	3
321		.5287	-d	3	3
004		.5344	-d	3	0.4
400	.6108	.6096	3	<3	2
114		.6106			
303		.6435	-d	<3	1
411		.6811			
330	.6828	.6858	4	<3	3
204		.6868			

[a] in pattern mixed with UBi

[b] in pattern mixed with Bi

[c] for a = 3.95 and c = 4.22 Å

[d] uncertain because of near coincidence with another line

temperature factor. The density calculated from this cell for two uranium atoms and a few oxygens is of the order of 13. This is intermediate between the values 14.2 and 10.96 for UO and UO_2 respectively[5]. All known higher oxides of uranium are even less dense. Thus the volume is correct for a uranium oxide UO_x, with x some value between one and two. Since bismuth is about as big as uranium and has nearly as great a scattering power, the data can as well be interpreted as a mixed oxide of Bi and U. The appearance of bismuth metal in the dark dust means that such a mixed oxide contains more uranium than bismuth (U_2BiO_4, U_3BiO_4, U_3BiO_5, etc.) and therefore has either a disordered structure or a true unit cell larger than the pseudo unit which is observed. The unknown oxygen positions may also require a larger unit cell.

The new phases "A" and "C" have complicated patterns which have not yet been indexed. The strongest lines in the low angle ranges are listed in Tables IV and V. "A" is presumably a compound with atomic ratio U/Bi approximately 4/5, and as such would explain the arrest noted by Ahmann and Baldwin about 35°C. above the peritectic temperature of UBi_2.[1] Phase "C" should be Ahmann and Baldwin's compound UBi_2.

Acknowledgement.

The author is indebted to Dr. J. D. McCullough for advice and assistance concerning the X-ray techniques, to Professor D. H. Templeton for working out the detailed structural analysis, and to Mrs. Lee Jackson for taking the diffraction patterns.

---

[5] R. E. Rundle, N. C. Baenziger, A. S. Wilson, and R. A. McDonald, "The Structures of the Carbides, Nitrides, and Oxides of Uranium", J. Am. Chem. Soc., 70, 99 (1948).

Table IV. Diffraction Data for Phase "A".

intensity	$\sin^2\theta$ (Cu Kα)	remarks
W	0.0722	Phase B
S	.0779	Partly Phase B
S	.0852	
W	.1285	
S	.1630	
M	.1801	
M	.1934	
M-	.2113	Phase B ?
M	.2250	Phase B ?
M	.2350	
M+	.2422	
M	.2585	
M	.2856	Phase B ?
S	.3132	
W	.3387	
M	.3762	Phase B ?
M-	.4012	

Weaker lines, not listed, are also present.

W = weak

M = moderate

S = strong

Table V. Diffraction Data for Phase "C".

intensity	$\sin^2\theta$ (Cu Kα)	remarks
M	0.0550	Bi ?
M	.0598	
S	.0668	
W	.0765	
W	.0795	A ?
W	.0847	A ?
S	.0907	
W	.0976	
W	.1062	Bi ?
W	.1156	Bi ?
M	.1202	
W	.1527	
W	.1595	
W	.1644	A ?
W	.1714	Bi ?
W	.1804	
M	.1876	
S	.2180	
M	.2408	
W	.2470	
W	.2684	
M	.2873	Bi ?
M	.2989	
M	.3080	
M	.3303	
M	.3366	

II. Liquid Sodium Pump

For the Purification of Inert Atmospheres.

Research requiring the use of inert atmospheres of very high purity has necessitated the development of a scavenging device capable of removing traces of oxygen and water vapor from a closed system[1, 2]. In the work cited and in similiar work being conducted in this laboratory, certain handling and sampling operations are required to be carried out on very reactive metals and alloys. The usual technique of sweeping the working chamber---the dry-box[3]---with inert gas proved to be inadequate because of desorption of gases from newly admitted working equipment, and from all interior equipment. Further, if the dry-box has not been in operation for some period of time, desorption takes place slowly, and the sweeping technique required large quantities of high-purity inert gases. Thus, considerable expense is incurred by this procedure.

The use of molten sodium or of sodium-potassium alloy (liquid at room temperature) as "getting" agents within the dry-box was adopted since these rapidly remove both oxygen and water vapor.

The early hopes that a continually clean reactive metallic surface might be achieved due to the sinking of the solid oxides and hydroxides, whose densities are greater than those of the liquid metals, proved to be unfounded. Instead, the oxide material floats, forming a very tenacious surface film which greatly slows down the "getting" process. It

---

[1] Leo Brewer, Russell K. Edwards, and David H. Templeton, AECD-2730, November 2, 1949.

[2] Raleigh L. McKisson and LeRoy A. Bromley, UCRL-689, May, 1950.

[3] L. Brewer, L. A. Bromley, P. W. Gilles, and N. L. Lofgren, AECD-2242, Oct. 15, 1945.

was found that continual hand-skimming of the oxide surface did provide a surface which was active enough to achieve a usable atmosphere within about six hours, starting with an atmosphere of high purity attained by sweeping procedures[1]. Purity was qualitatively judged by the fact that the liquid metallic surface would remain bright for as long as five minutes, but if very little external air is admitted to the dry-box the immediate formation of an oxide film is easily observed.

To eliminate the tedious hand process, an apparatus consisting of a pump and contacting tray was constructed (Fig. 1). This unit was designed to sit in a container of the liquid metal and to pump the metal up the central tube from which it spilled onto the tray. The intent was that the flow of metal would carry off the oxide and hydroxide being formed, thus leaving a constantly clean active surface in the tray. A fan circulates the atmosphere and directs its flow onto the contacting tray.

This apparatus worked very well after the dry-box atmosphere became reasonably pure but the tenacity of the film formed in the usual starting atmospheres was such that the film remained on the metal surface in the tray and required skimming until the atmosphere improved. This unit was used with both the sodium-potassium alloy at room temperature and with molten sodium at 150°C. The use of the latter was more satisfactory in that the film formed was less tenacious.

A second apparatus is shown in Fig. 2. It consists of a gear pump which circulates the liquid metal and delivers it from a goose-neck delivery tube. A fan flows the atmosphere over the resulting standing stream of metal and due to the high velocity of the stream, the oxide-hydroxide film is carried away nicely even in very impure atmospheres.

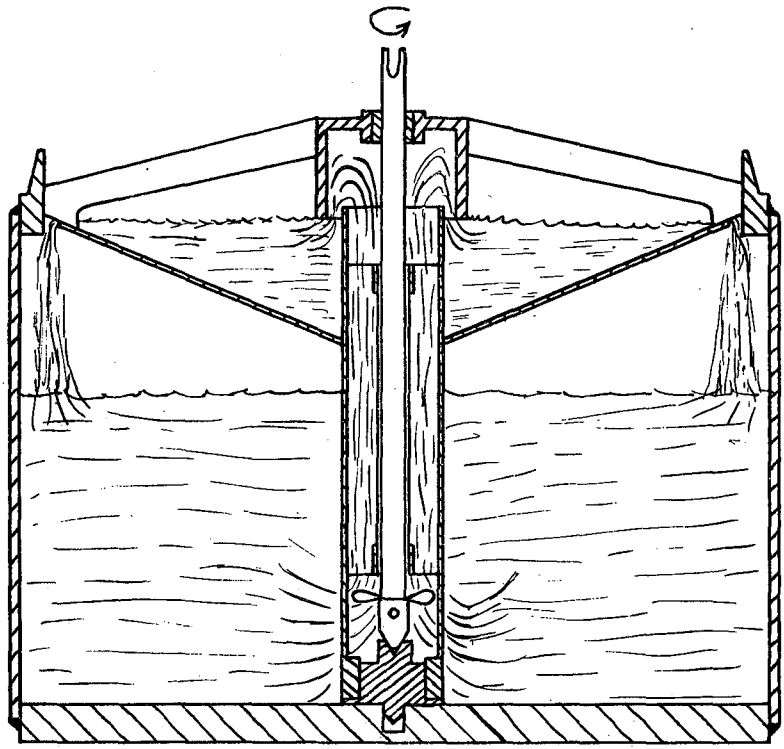

MU 819

FIG. 1

IMPELLER TYPE SODIUM PUMP

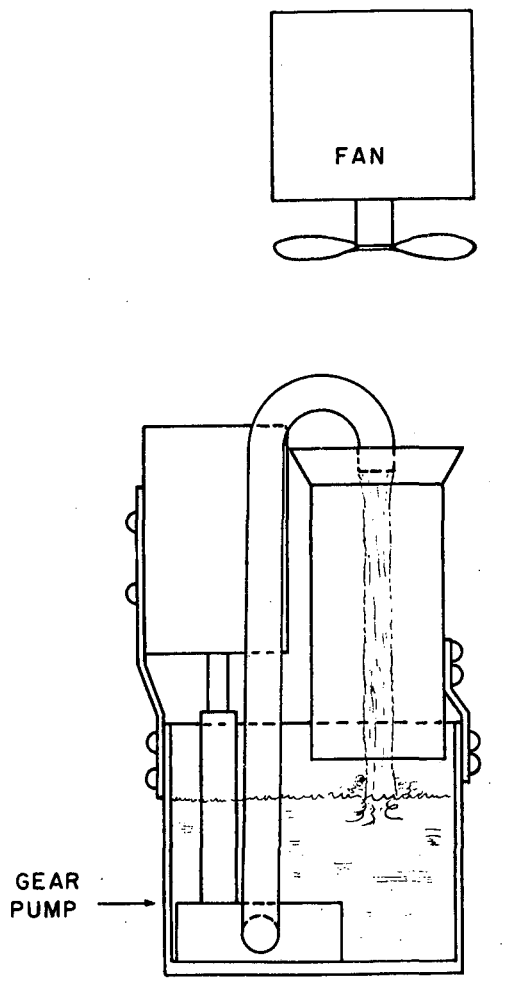

MU 820

FIG. 2
GEAR TYPE SODIUM PUMP

This device, however, was unsatisfactory due principally to the formation of such quantities of froth that actual spilling over occurred, and due also to binding in the gear pump, caused presumably by carry-through of solid particles.

The most satisfactory apparatus (Fig. 2) consists of a vertical helical pump which discharges streams of molten sodium onto a downward sloping contracting tray. The helical pump element gives the discharged sodium a tangential component which is sufficient to rotate the discharge wier. This gives twelve streams of liquid sodium rotating in a spoke-like fashion and with sufficient velocity to remain free from visible oxide film. This unit operates satisfactorily when starting, and atmospheres have been attained in which drops of molten sodium have remained bright without visible oxide coating for as long as a half hour.

The simple qualitative test for atmosphere purity mentioned above was augmented by the use of the dew-point apparatus shown in Fig. 4. Although analysis was not made, one can assume that the partial pressure of oxygen will certainly be no more than a factor of 15 larger than that of water vapor. It will probably be very much less, because of adsorbed water on equipment admitted to the dry-box.

The procedure for starting the scavenging process after a period of inoperation consisted of sweeping the dry-box with a volume of helium followed by two volumes of argon. The helium enters at the top and causes a downward displacement, then the argon enters at the bottom and causes an upward displacement; a total of 31 $ft.^3$ of gases are used in the sweeping operation. A slight pressure above atmospheric is maintained at all times within the dry-box so that any leakage will be

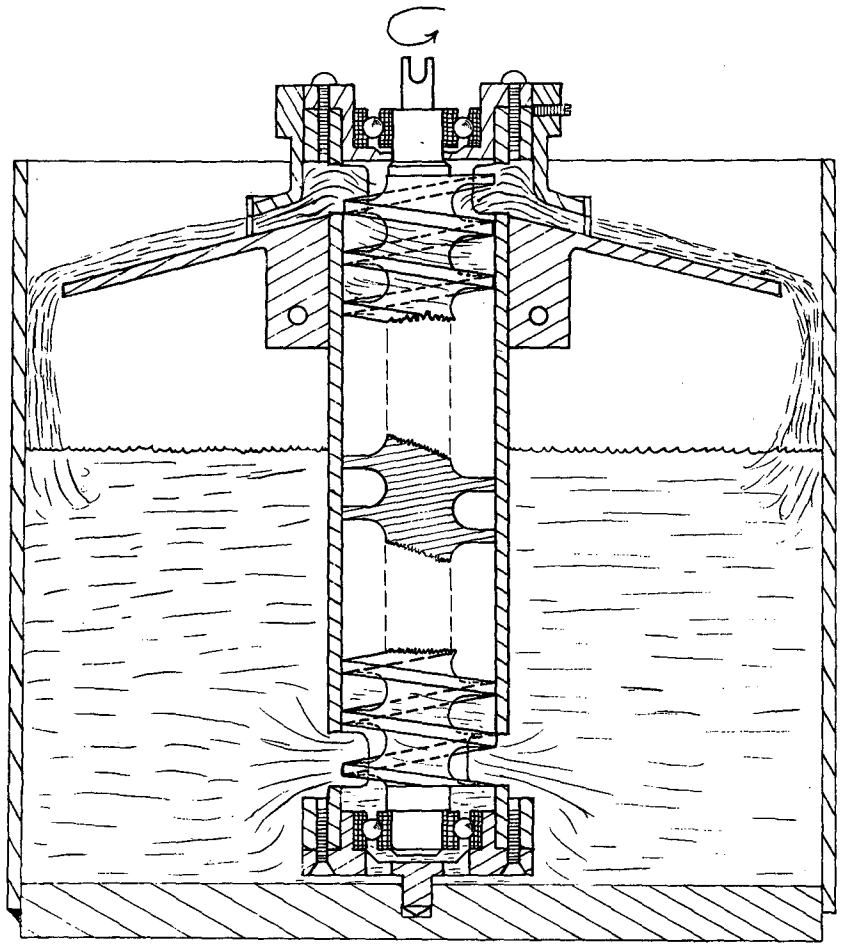

FIG. 3 MU 821

HELICAL SODIUM PUMP – FINAL DESIGN

16632

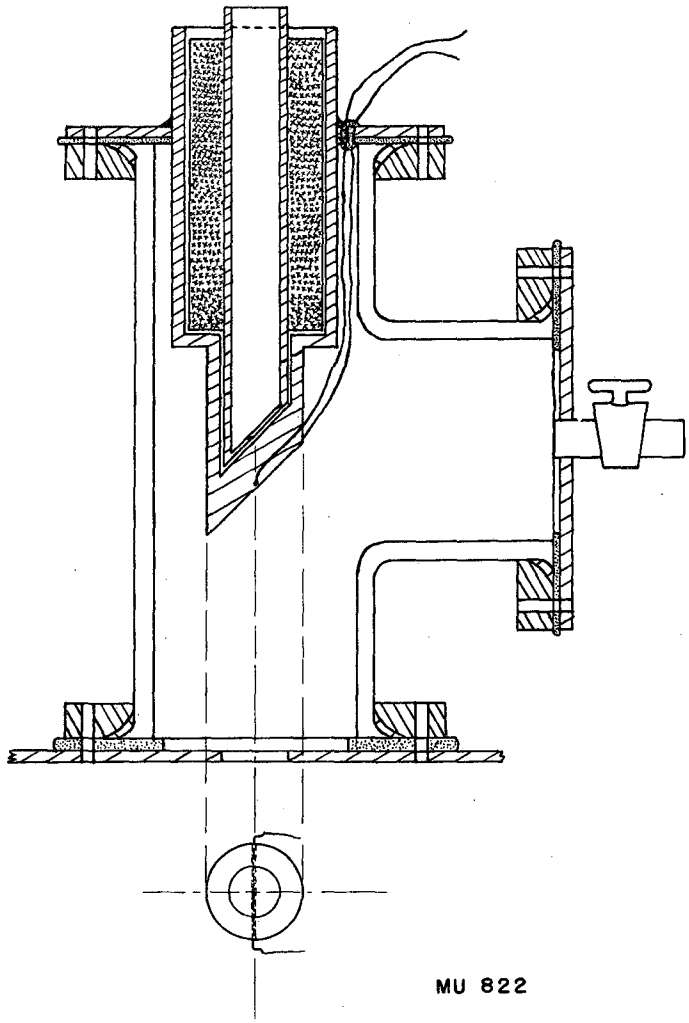

FIG. 4
DEW POINT APPARATUS

out rather than into the box. After two hours operation of the scavengen (Fig. 3), the water vapor pressure is reduced to about 0.5 mm. Hg, and after eight hours it is about 0.05 mm. Hg. The minimum pressure measured corresponded to a dew point of -100°C. or about 10^{-5} mm. Hg, which was attained after five days of continuous operation. It should be recognized that the initial rates are very sensitive to the history of the dry-box when not in use. If one starts with a dry-box which has been left open to air, sweeps out as described above, and begins scavenging, the apparent rate of purification is slow. However, if one has obtained a good atmosphere, and has only admitted a piece of equipment through the port system, then purification can be achieved in about two hours.

It is of interest to compare the rates of oxidation of a reactive metal in a vacuum and in a dry-box. It can be assumed that the rate of absorption at the surface of the metal is instantaneous for both cases. Therefore, the rate of reaction is determined by the rate at which reactive material reaches the surface. In a vacuum, this rate is measured by the number of molecules passing through a unit area per unit time; in the dry-box, this rate is determined by the rate of diffusion of the reaction molecules through the inert molecules. The former calculation follows from the kinetic theory of gases, since in a dynamic vacuum the leak rate is equal to the pumping rate, and the mole fraction of deleterious material will usually be near 0.2. The latter calculation depends upon a knowledge of the "film thickness". Heat transfer correlations[4] can be utilized here, and for limits one can take continuous motion of one ft./sec. across a one inch cylinder,

---

[4] W. H. McAdams, "Heat Transmission", McGraw Hill, 1942.

and the motion resulting from natural convection for a temperature difference of 1°F. over a horizontal plate. These film thicknesses which should represent a reasonable minimum and maximum are 0.1 inch and 0.25 inch respectively. The effective diffusivity is taken at 0.83 ft.^{2}/hr. or 0.21 cm.^{2}/sec. Table I shows the results of the calculations outlined above, with an assumed oxygen to water vapor ratio of 15 in the dry-box. A lower ratio would make the dry-box be even better relative to the vacuum chamber.

From Table I, one may conclude that there is a factor of about 10^4 more deleterious material present in a dry-box than total pressure in the vacuum chamber which gives an equal rate of attack. It would be virtually impossible to manipulate objects in a vacuum of 10^{-7} atm. (0.1 micron Hg), and, since a dew point of -50°C. is easily attained, the dry-box offers great advantages to work requiring inert atmospheres and ease of manipulation. Further, since dew points of -100°C. have been attained, the dry-box can surpass even the highest vacuum with respect to preventing oxidation of highly reactive materials.

Acknowledgement

The author is indebted to Professor L. A. Bromley and to Dr. R. L. McKisson for their co-operation and mutual interest in this work.

Table I

The Dynamic Vacuum Pressure Equivalent in Reactivity to Various Dry-box Atmospheres

Dry-box Atmosphere			Assuming Film Thickness=0.25"		Assuming Film Thickness=0.1"	
Dew Point °C	v.p. H_2O atm.	Assumed Pres. of Oxygen atm.	Dry-box Rate* $\frac{\text{mol.}}{\text{cm.}^2\ \text{sec.}}$	Equiv. Vacuum** atm.	Dry-box Rate $\frac{\text{mol.}}{\text{cm.}^2\ \text{sec.}}$	Equiv. Vacuum** atm.
0	6.0×10^{-3}	9.0×10^{-2}	7.8×10^{-7}	6.5×10^{-6}	3.1×10^{-6}	2.6×10^{-5}
-25	6.6×10^{-4}	9.9×10^{-3}	8.7×10^{-8}	7.2×10^{-7}	3.4×10^{-7}	2.9×10^{-6}
-50	4.0×10^{-5}	6.0×10^{-4}	5.1×10^{-9}	4.3×10^{-8}	2.0×10^{-8}	1.7×10^{-7}
-75	1.2×10^{-6}	1.8×10^{-5}	1.6×10^{-10}	1.3×10^{-9}	6.2×10^{-10}	5.1×10^{-9}
-100	1.3×10^{-8}	1.95×10^{-7}	1.7×10^{-12}	1.4×10^{-11}	6.8×10^{-12}	5.7×10^{-11}

*Assuming Δt = 1°F over horizontal plate; V = 1 ft/sec. over 1" cylinder.

**Total pressure (20% oxygen plus water vapor assumed).

III. Silicon Monoxide Stability of the Solid, Heat of Formation and Dissociation Energy of the Gas.

Introduction

The existence of the monomeric gaseous silicon monoxide, analogous with carbon monoxide, has been unequivocably established by the spectroscopic investigations of de Gramont and de Watteville[1], Jevons[2], Saper[3], Bonhoeffer[4], and Sharma[5]. The first recognition of a gas of this composition was, however, in 1905-1907 by Potter[6a,b], who found that the solid product obtained from quenching the gas evolved at about 1700°-1800°C. from mixtures of Si and SiO_2 in widely varying composition ratios yielded a solid whose composition remained essentially SiO.

Potter also contended that the "brown powder" resulting from the quenching was solid silicon monoxide and not a homogeneous mixture of amorphous Si and SiO_2 equivalent to Tone's[7,8] "brown vitreous

---

[1] A. de Gramont and C. de Watteville, Compt. rend. 147, 239 (1908).

[2] W. Jevons, Proc. Roy. Soc., 106, 174 (1924).

[3] P. G. Saper, Phys. Rev. 42, 498 (1932).

[4] K. F. Bonhoeffer, Z. physik. chem. 131, 363 (1928).

[5] D. Sharma, Proc. Nat. Acad. Sci. India, A 14, 37 (1944).

[6a] H. N. Potter, Trans. Amer. Electrochem. Soc. 12, 191, 215, 223 (1907).

[6b] Earlier work by Potter appears in the patent literature and is cited in the review by C. A. Zapffe and C. E. Sims, Iron Age 149, No. 4, 29, No. 5, 34 (1942).

[7] F. J. Tone, Trans. Amer. Electrochem. Soc. 7, 243 (1905).

[8] This paper describes further work done on Tone's original preparations. H. N. Baumann, Jr., Trans. Amer. Electrochem. Soc., 80, 95 (1941);

substance", which he could also obtain under conditions probably amounting to annealing rather than quenching and which gave different properties with respect to specific heat and heat of combustion measurements. Annealing experiments on the "brown powder" led him to the conclusion that disproportionation of solid SiO to solid Si and SiO_2 took place at temperatures as low as 400°C., but that probably it was stable at high temperatures as he was unable to observe liquefaction at 1700°C.

A voluminous literature has accrued on the subject of the stability of the solid silicon monoxide since Potter's work and the previous negative work[7,9]. The author's current interest in the problem stemmed from the desirability of deciding to which of the two equilibria[10], $Si_s + SiO_{2_s} = 2\ SiO_g$ or $SiO_s = SiO_g$, the free energies of reaction, heat of reaction and entropy of reaction resulting from the effusion measurements of Gel'd and Kochnev[11a,b], should apply. Gel'd and Kochnev had assumed on the basis of the fact that they had introduced solid SiO into their effusion chamber initially and an erroneous consideration, which will be discussed later, that the equilibria pertaining was the one involving the solid SiO. The uncertainty which remains leaves considerable doubt associated with the dissociation

---

9 C. Winkler, Ber. Chem. Ges. 23, 2642 (1890).

10 The subscript symbols for the chemical equations have the following significance:
s = crystalline solid unless otherwise noted
l = liquid
g = gas

11a P. V. Gel'd and M. K. Kochnev, Zhur. Priklad. Khim. 21, 1249 (1948).

11b This same work was published in less detail in Doklady Akad. Nauk. S.S.S.R. 61, 649 (1948).

energy of SiO gas which Brewer and Mastick[12] have recently discussed. The latter point out that the entropy of reaction obtained by Gel'd and Kochnev is such as would be expected if solid SiO were the form involved.

Several investigators have found that samples of the SiO solid material annealed at high temperatures gave, on room-temperature X-ray diffraction studies, patterns of Si and of SiO_2. Though this was considered to indicate instability it is clear that a solid stable only at some high temperature but becoming unstable at some intermediate temperature would give precisely this result as well as a solid form which might be everywhere unstable. From Gel'd and Kochnev's work it appeared that this first condition might well apply. In an attempt to elucidate this issue the author presents the results of studies of X-ray spectrograms of mixtures of Si and SiO_2 at temperatures up to the region of the equilibrium measurements cited by use of the high temperature X-ray camera.

Towards the completion of the high temperature X-ray studies, the excellent paper by Schafer and Hornle[13] appeared, and their effusion measurements of the SiO gas pressure over mixtures of Si + SiO_2 gave an entropy of reaction in good agreement with the non-assumption of the stable existence of solid SiO. They were working in the same temperature range as Gel'd and Kochnev and should no doubt have had the same solid phases. The author has recalculated the data of Schafer and Hornle by a more careful method which makes their high degree of precision much more evident and thereby reveals a discontinuity between

---

[12] L. Brewer and D. F. Mastick, J. Chem. Phys 19, 834 (1951).

[13] H. Schafer and R. Hornle, Z. anorg. allge. chem. 263, 261 (1950).

1156°C. and 1187°C. in the thermodynamic data. The author has therefore conducted on mixtures of the component solid phases quenching experiments and an interesting new type of study, which is related to electrical conductivity measurement, to explore this temperature region as the X-ray camera was limited to temperatures below 950°C.

A comprehensive and critical review of the literature reveals that much controversy as to the existence of solid SiO has been due to the sheer difficulty in finding properties which might distinguish a barely stable amorphous solid SiO from its amorphous solid decomposition products in the form of a homogeneous mixture. In the first part of this paper we have therefore attempted to systematize the relevant observations.

Preparation and Properties of Silicon Monoxide Solid

The solid of the composition of SiO is usually prepared by heating, to 1000°-2000°C. in vacuum, SiO_2 with some reducing agent such as Si, C, or SiC, whereupon the gas evolved will condense in a cold trap or any of the colder sections of the apparatus. Or, metallic oxides can be used to oxidize Si to the gaseous monoxide in a similar manner. Zapffe and Sims[6b] review many of the various preparations.

There is now a multiplicity of evidence from X-ray and electron diffraction studies[14,15,16,17,18,19] which leaves little room for doubt

---

[14] H. Inuzuka, Mazda Kenkyu Ziho, 15, 161, 237, 305, 374 (1940).

[15] G. Grube and H. Speidel, Z. Elektrochem. 53, 339 (1949).

[16] H. Konig, Optik 3, 419 (1948).

[17] G. Hass and N. W. Scott, J. Optical Soc. Am. 39, 179 (1949).

[18] H. Erasmus and J. A. Persson, J. Electrochem. Soc. 95, 316 (1949).

[19] G. Hass, J. Am. Ceram. Soc. 33, 353 (1950).

that a diffraction ring corresponding to a d-spacing of 3.60±0.05 A. is to be associated with a material of the composition of silicon monoxide which has been formed by the quenching of a gas of this composition from high to low temperatures. This ring, which will hereinafter be referred to as the "characteristic ring", is almost always quite broad and most often alone so that the amorphous appearance long attributed to solid silicon monoxide finds agreement with this evidence of lack of appreciable long-range order.

The alternative that this ring might belong to a mixture of amorphous Si and SiO_2 does not seem to be an acceptable consideration. The position of the diffuse ring is nearly mid-way between the strong bands of the amorphous Si and amorphous SiO_2, but the additional bands which should be present under this circumstance are missing. Hass[19] has presented the electron diffraction pattern for amorphous Si and Konig[16] has tabulated both the electron and X-ray diffraction patterns of amorphous SiO_2.

This criterion of possessing the characteristic ring may now be used to establish some other properties which belong decisively to the silicon monoxide solid.

Erasmus and Persson[18] found that material having the characteristic ring in electron diffraction was completely soluble in HF as is the case with SiO_2. A mixture of Si and SiO_2 was, however, soluble only to the extent of the amount of SiO_2 present. Inuzuka[14] also observed practically complete solubility of his material which had been identified in the same manner. Diffraction methods were not available to Potter at the time of his work, but other evidence will be shortly given which makes probable that his "brown powder" was largely silicon monoxide. He observed Si-enrichment when his material was treated with HF[6a].

It seems now that this was probably due to the circumstance of having a mixture of SiO and some (Si + SiO_2) from partial decomposition having previously taken place, since the action of HF does not appear to promote the disproportionation of the monoxide in the cases cited above. The limited solution of his material is not sufficiently quantitatively described to permit drawing of further conclusions.

Potter carefully measured the average specific heat of his "brown powder" in the interval 30°-99°C., and he compared his results with several reference runs on crystalline Si and SiO_2 and on amorphous Si and SiO_2 and mixtures of the latter simulating a presumed disproportionated mixture designated "pseudomonoxide". The results of his reference runs are in very good agreement with the accepted values today and it is believed that the increase in heat capacity of 1.14 cal./mol.-deg. in the monoxide over the value for the "pseudomonoxide" is significant. This conclusion is substantiated by the measurements which showed the heat capacity of the monoxide to decrease after annealing at 400°C., and after a period of 4 hours the heat capacity became essentially that of the "pseudomonoxide". The annealing was done in the sealed-off silver or glass containers which were used for the specific heat measurements so that exposure to external air was avoided. It seems safe to accept for silicon monoxide solid an average C_p = 9.19±0.16 cal./mol.-deg. in the region of 338°K. In view of the partial decomposition of Potter's "brown powder" as indicated by the HF solubility observations the value adopted here should represent a lower limit. No other measurements of this property have been made.

One might expect a homogeneous mixture of amorphous (Si + SiO_2) to behave as a considerably better electrical conductor than the solid SiO. Gel'd and Kochnev[11] report, for the material they considered to

be the monoxide, the electrical resistivity of about 5×10^6 ohm-cm. Erasmus and Persson[18] found their "black, resinous-looking material" of characteristic electron diffraction ring to be almost a non-conductor, whereas the "brown SiO condensate", found by diffraction studies to be truly disproportionated, was "an electrical conductor with high resistance."

Other properties of SiO solid are not decisively different than one would expect for the homogeneous mixture ($Si + SiO_2$) of the amorphous components. Thus, von Wartenberg[20] reported that the aqueous reaction

$$SiO_s + 2\ KOH = K_2SiO_3 + H_{2_g}$$

requires higher temperatures than does the analogous one with Si, and that the aqueous reaction

$$4\ AgClO_4 + 2\ SiO_s + 12\ HF = 4\ Ag_s + 4\ HClO_4 + 2\ H_2SiF_6 + 2\ H_2O$$

is noticeably slower than the analogous reaction with Si. These results could, of course, be easily explained on the basis of the possibility of the reactive material, Si, in the mixture ($Si + SiO_2$) being protected somewhat by the presence of the SiO_2.

Potter[6a] measured the heat of combustion for his "brown powder" and, though his results were quite erratic, he believed that the results were significantly higher than for the "pseudomonoxide", and he thought this property was identifying. The rather large fluctuations among his various combustion determinations, the often observed dependence of combustion measurements on the physical state of subdivision of the material being tested (unless the extent of the reaction is established), and, lastly, the heat of solution work of von Wartenberg[20] tend to

---

[20] H. von Wartenberg, Z. Elektrochem. 53, 343 (1949).

disqualify his conclusion. The latter experimenter, also cognizant of the general inability of distinguishing between a solid SiO and a homogeneous mixture ($Si + SiO_2$) on the basis of usual physical methods, sought to show that the heats of reaction of equivalent amounts of these materials were different in some particular reaction. His results, which will be later discussed, were precisely the opposite within the limits of error of the measurements (± 3 kcal.). There is reason[21] to believe that the characteristic diffraction ring had been observed on the material used by von Wartenberg.

The density of the solid SiO appears to be about 2.15 ± 0.03 g/cm.^{3} on the basis of most of the results of the literature for the cases where the identity is considered established. This property does not seem useful in distinguishing between the compound and the homogeneous amorphous mixture, as Hass[19] has reported considerable variation of the density with the physical condition of the material which was in turn dependent on the rate of condensation from the gas phase.

Erasmus and Persson[18] report dielectric constant measurements on the identified SiO solid and one of the results is recorded as 5.0 for a measurement frequency of 0.05 megacycles and a power factor of 0.011.

The refractive index of solid SiO is conspicuously variable according to Inuzuka[14] who found values from 1.70 to 1.80 and higher (beyond his range of measurement) and also according to Beletskii and

---

[21] It is not entirely clear in the late von Wartenberg's paper as to whether diffraction data were taken on samples of the specific material used in calorimetry. From a personal communication from Professor Konig, July 20, 1951, it is known that the latter identified SiO solid in thin films formed from vaporizing from a tungsten wire the material used by von Wartenberg. There is an inference that the material used by the latter may have been part of that prepared and identified by Grube and Speidel.[15]

Rapoport[22] who report values of 1.92 to 1.94. One can not be sure that the latter observed the characteristic ring. Both papers report that their material was optically isotropic. Hass and Scott[17] found the refractive index to vary depending on the rate at which the material had been formed in condensation.

The physical appearance of the silicon monoxide solid has been variously reported. In the cases where identification has been probably assured, the range in color runs from "brown transparency"[16] for thin films to "dark brown to black, massive, glasslike"[19], "fine dark powder"[14], "black glassy"[15], and "black resinous-looking"[18] for the heavier deposits. Deposits which have decomposed to Si and SiO_2 seem to be more often of a lighter brown color. However, many indications lead one to suppose that the color of the SiO solid, either decomposed or not, can fall within a range of light brown to black.

The observation of Potter[6a] that he could not liquify the solid monoxide at a temperature of 1700°C. may be of significance as the author has probably verified this result as will be discussed later.

Composition of SiO Solid

The terminology "silicon monoxide" with respect to the solid phase of approximately this composition has generally been used in spite of the fact that analysis of condensates has more often shown oxygen compositions in excess of this.[13,14,15,20,23] This prevalent view has been based on the strong tendency to consider that the gaseous species must be silicon monoxide in analogy with carbon monoxide and hence on

---

[22] M. S. Beletskii and M. B. Rapoport, Doklady Akad. Nauk. S.S.S.R. 72, 699 (1950).

[23] G. Grube, A. Schneider, U. Esch, and M. Flad, Z. anorg. allgem. Chem. 260, 120 (1949).

condensation the solid product also must have this composition. This view is now well justified because of the work of Schafer and Hornle[13] who have clearly demonstrated that crucibles with mixtures of Si with SiO_2 in excess, and moreover topped with a layer of SiO_2, yield, on heating in vacuum, a gas of the empirical composition of SiO. This result fell from the fact that the weight loss of the crucible and contents after having been heated constant weight was quite equal to the expected amount calculated on the basis of all of the Si having been oxidized by SiO_2 and having then vaporized as the monoxide. The protective layer of SiO_2 would have insured that no co-vaporization of Si would have taken place. Analysis insured that no free Si remained. They had previously experimentally established that co-vaporization of SiO_2 could not be important in the temperature region under consideration (1180° to 1200°C.).

If the gaseous composition is thus established as SiO then the explanation of the excessive oxygen composition of the usual condensate must be that oxidation of the material has taken place due to inferior vacuums or to excessive exposure to the external atmosphere prior to analysis. Konig[16] has demonstrated that films of SiO solid oxidize at room temperature. Hass[19], also working with films, has obtained for his less dense films a rate of oxidation at room temperature of about 100 A. per hour. Previous workers have reported the powdered condensates as pyrophoric. Now, we might then expect that careful techniques both during condensation and during subsequent handling prior to analysis should produce a product of the exact composition SiO. Indeed, this was the result reported by Zintl and co-workers[24] and more recently by

---

[24] E. Zintl, W. Brauning, H. L. Grube, W. Krings, and W. Morawietz, Z. anorg. allgem. Chem. 245, 1 (1940).

Erasmus and Persson. The latters' product had the "characteristic" ring in electron diffraction.

Crystal Structure of Solid SiO

Inuzuka[14] in 1940 was the first to present X-ray and electron diffraction data on the solid silicon monoxide, and it should be noted that his patterns included the characteristic ring. His work has received insufficient recognition in the literature[25] and Grube and Speidel[15] have usually been cited as having been first to associate this ring with solid silicon monoxide.

Inuzuka's work is of special interest in that he obtained several diffraction rings. Since his material did have the characteristic ring subsequently reported several times, as previously discussed, for the "massive, black glassy" or "black resinous" and even the "brown films", the identity of the material is assured. Additionally it is noteworthy that his material was a "fine dark powder" which collected on the water-cooled vacuum walls; that is, a physically different material was obtained and this could well be associated in some fashion with the higher degree of lattice order evidenced by the presence of extra diffraction rings.[26]

---

[25] This situation is entirely understandable in view of the general unavailability of Inuzuka's publications. Dr. Inuzuka, whose personal library was destroyed in the late war, was very kind in obtaining for the author reprints from the library of a friend. Many of his original data are presented in this thesis for the purpose of making them more readily available.

[26] Method of preparation was by vaporization from a mixture of SiO_2 + C in a graphite crucible heated by a molybdenum resistance winding and in a vacuum maintained by a rotary oil pump. The SiO condensed on the water-cooled chamber walls.

The X-ray diffraction data by Inuzuka, taken using both CuKα and CoKα x-radiation are presented in Table I. He indicated some broadness of his lines as he reported that diffuse halos appeared on both sides of the distinct lines.[27]

Inuzuka's diffraction pattern using cobalt Kα radiation was said to be quite more distinct than that obtained with copper Kα radiation and hence was used in his rather extensive and well-considered structural analysis. He obtained a cubic lattice of $a_o = 6.4$ A. with 8 molecules per unit cell and with the T_h^6 space group. This rather complete analysis from powder patterns alone was possible only because of the simplicity in composition and the high symmetry involved. The isometric system was indicated at the outset because of the optical isotropy. The structure is shown in Figure 1 which gives the basal projection of the atomic positions. Figure 2 shows how the atoms are arranged along the diagonal of small cubes of edge $a_o/2$ A.

The assignment of indices are given in Table II together with a comparison of observed and calculated d-spacings and intensities.

Because of the lack of sharp definition in the diffraction lines, one must consider that the agreement is satisfactory. Inuzuka concluded that the weak lines and long exposure time required (ca. 3 hrs. at 40 kilovolts and 10 milliamperes) and the variation in the refractive index are in favor of disorder in the distribution of atoms in the lattice.

Beletskii and Rapoport[22] have questioned the work of Inuzuka, apparently without having had access to his data. They conclude that the

---

[27] In a personal communication of July 31, 1951, Dr. Inuzuka writes, "The line of d=362 A. on the film described in my reprint is recognized as a line (as it is faint), not a diffuse band, and the line has some diffuse halos on both sides. My X-ray powder camera is constructed to study the X-ray diffuse band of fused silica, so that the camera is fixed to minimize the background blackening."

Table I. X-ray Diffraction Data of Inuzuka

First SiO preparation using Copper Kα, x-radiation			Second SiO preparation using Cobalt Kα, x-radiatiom			
Obs. sin θ	Estimated Intensity (Visual)	d-values	Obs. sin θ	Estimated Intensity (Visual)	Measured Intensity (Photometer)	d-values
0.137	strong	3.65 A.	0.138	medium	9 *	3.62 A.
0.158	strong	3.16	0.156	strong	20	3.21
0.195	faint	2.56	0.196	medium	5	2.55
0.224	faint	2.23	0.226	very faint	5	2.21
0.260	strong	1.92	0.258	strong	12	1.94
0.296	medium	1.69	0.302	st.-med.	not detected	1.66
0.321	faint	1.56	0.322	strong	18	1.55
			0.376	medium	5	1.33
			0.394	faint	not detected	1.28

* The intensity data are from photometer measurement of the film. The intensity scale is explained in conjunction with Table II. The d-values have been added by the author of this thesis.

Table II. Comparison of Inuzuka's

Observed and Calculated Data

(hkl)	$(h^2 + k^2 + l^2)$	d (obs.)	d (calc.)	I (obs.)	I (calc.)
(111)	3	3.62 A.	3.70 A.	9 *	9.0
(200)	4	3.21	3.20	20	24.0
(112)	6	2.55	2.61	12	14.5
(220)	8	2.21	2.26	-- **	2.2
(113)	11	1.94	1.93	5	6.4
(123)	14	1.66	1.71	5	5.8
(400)	16	1.55	1.60	18	24.5
(233)	22	1.33	1.36	5	8.0
(431)	26	1.28	1.26	-- **	4.0

* The observed relative intensities (measured photometrically) were normalized to agree with the calculated value for the (111) reflection.

** These lines did not register photometrically but were visually noted as is indicated in Table I.

latter did not have SiO but instead had a mixture of Si and SiC as did Baumann and as did Beletskii and Rapoport in an investigation for which they supply data. For another condensate (yellow-brown, optically isotropic, of density 2.13, and index of refraction of 1.92 to 1.94) they claim that they obtained, though with considerable background, X-ray diffraction plates whose lines established a cubic lattice with the constant a_o = 5.16 A. They state that no other lines were found. It is regretable that they present, in this case, no data whatsoever to substantiate this contention. We do not even learn from their work if they found any lines which were in disagreement with Inuzuka's work. It would have been most desirable to have been able to have compared the inherent d-values and intensities with the other literature. Calculations readily show that the constant of a_o = 5.16 A. predicts many of the lines of Inuzuka's patterns with satisfactory accuracy. The author believes that this should be considered to support Inuzuka's work in that it may be taken as additional evidence of the existence of the lines other than the characteristic one at d = 3.6 A. As yet, these additional lines have not been elsewhere reported. No weight can be given to Beletskii and Rapoport's presentation of the cubic lattice with a_o=5.16 A. in the absence of data.

In Table III Inuzuka's diffraction pattern for SiO is compared with the literature patterns for SiC, Si, and the low temperature forms of quartz, cristobalite, and tridymite. These forms, along with perhaps amorphous Si and amorphous SiO_2, would seem to constitute all the obvious possibilities. It is seen that tridymite can be ruled out at once because of the absence of its strongest line at d = 4.34 and its second strongest line at 3.80. The strongest line at d = 4.04 A. and the third strongest line at d = 2.84 are missing for α-cristobalite. Likewise

Table III. Comparison of Inuzuka's Diffraction Pattern

For SiO With Those[28] of Si, SiC, and SiO_2

SiO		SiC		Si		α-quartz		α-cristobalite		α-tridymite	
d	I[29]	d	I	d	I	d	I	d	I	d	I
										4.8	m
										4.34	vvs
						4.25	w				
										4.11	s
								4.04	vvs		
										3.80	vs
3.62	w										
						3.35	vvs				
3.21	vvs									3.24	vw
				3.12	vvs			3.13	w		
										2.96	m
								2.85	vw		
										2.79	vvw
2.55	s	2.51	vvs								
						2.45	vw	2.48	w	2.49	m
										2.38	vvw
						2.29	vvw			2.30	vw
2.21	vvw	2.17	vw			2.23	vvw				
						2.12	vvw	2.11	vvw	2.09	vvw
								2.02	vvw	2.06	vvw
						1.97	vvw			1.97	vw
1.94	w			1.91	vvs			1.93	vw		
								1.87	vw	1.87	vvw
						1.82	w			1.78	vvw
1.66	vw					1.66	vvw	1.69	vvw	1.69	m
				1.63	s					1.64	vw
								1.61	vw	1.61	vvw
								1.57	vvw	1.59	vw
1.55	vvs	1.54	s			1.54	w	1.53	vvw	1.53	vw
								1.49	vvw	1.51	vvw
						1.45	vvw	1.43	vvw	1.44	vw
								1.40	vvw	1.40	vw
						1.37	w	1.37	vvw	1.37	vvw
				1.35	vw			1.34	vvw	1.34	vvw
1.33	w										
		1.31	m			1.30	vvw	1.30	vvw	1.31	vw
1.27	vw							1.28	vvw		
		1.26	vvw			1.26	vvw			1.25	vvw
				1.24	w	1.23	vvw	1.23	vvw	1.23	vvw
						1.20	vvw	1.20	vvw	1.19	vw
						1.18	vvw	1.18	vvw		
						1.16	vvw			1.16	vw
		1.09*	vvw	1.10	m			1.09	vvw	1.10	vvw

28. The data for α-tridymite are from Alphabetical and Grouped Numerical

Table III. (cont.)

Index of X-ray Diffraction Data, Special Technical Publication No. 48-B, American Society for Testing Materials, Philadelphia. Data from the several cards are averaged.

The other data (with the exception of SiO) are from J. D. Hanawalt, H. W. Rinn, and L. K. Frevel, Ind. Eng. Chem., Anal. Ed. 10, 457 (1938).

29 The d-values are in angstrom units. The intensities have all been converted from a numerical scale to those given on the following basis:

vvs = 85 - 100
vs = 70 - 84
s = 55 - 69
m = 40 - 54
w = 25 - 39
vw = 10 - 24
vvw = 1 - 9

* No lines of intensity greater than "vs" appear at lower d-values.

α-quartz is ruled out by the absence of its strongest line at d = 3.35 and its second strongest line at 4.25. In agreement with Beletskii and Rapoports' proposal it can be seen that a superposition of the patterns of Si and SiC would give a pattern not unacceptably different than Inuzuka's except that the line at d = 3.6 would be missing. However, the ratio of intensities of the 3.12 to 1.91 lines for Si are in poor agreement with the corresponding SiO lines. Similarly in the case of SiC the ratio of intensities for the 2.51 to 1.54 lines do not agree well with the corresponding lines in the SiO pattern. In addition, it was known be analysis that the carbon content was less than 0.5% and hence SiC would scarcely be expected to give a pattern of detectable intensity, at least when compared with Si as should be done on the assumption of Beletskii and Rapoport. Inuzuka noted that some of the lines would fit carbon but that due to the small amount present he doubted if this was a probable consideration. Comparison of Inuzuka's pattern with the patterns of amorphous Si and amorphous SiO_2 previously cited does not indicate their presence.

Disproportionation of Silicon Monoxide Solid Due to Heat Treatments

As previously mentioned, Potter[6a] observed a conspicuous change in the specific heat after annealing his "brown powder" at 400°C. for four hours in sealed glass or silver containers. Inuzuka[14] heated (in air) his "fine dark powder" for two hour periods at temperatures in intervals of 50°C. up to 400°C. and at 100°C. intervals to 1400°C. After the treatment at 50°C. his X-ray patterns no longer showed the characteristic line but his electron diffraction patterns detected it up to 400°C., and

not beyond. The superimposed effects of disproportionation and oxidation may have compounded the effects noted. Brewer, Edwards, and McCullough[30] heated an intimate mixture of Si and SiO_2 of the composition corresponding to SiO to 1300°C. in an atmosphere of argon for periods of time of 30 minutes in one case and 20 minutes in the other case. The X-ray diffraction results showed the major phases to be Si and α-cristobalite with some α-quartz present.

Erasmus and Persson[18] found their "black, resinous-looking" SiO to change on heating in inert atmosphere at 1300°C. to 1375°C. to a tan-looking material whose diffraction pattern showed Si. Hass[19] found films of SiO possessing the characteristic ring in electron diffraction to, after 2 hour heat-treatment in argon at 700°C., give three diffuse rings which he reports to be identical with those obtained from a mixture of amorphous Si and amorphous SiO_2. Similar treatment at 900°C. yielded crystalline Si and amorphous SiO_2. Schafer and Hornle[13] found that amorphous SiO obtained by quenching of the gas phase showed the X-ray diffraction pattern of crystalline silicon if it had been annealed for a short time in an evacuated quartz tube at 1000°-1200°C. They found no alteration in patterns of briquetted intimate mixtures of (Si + SiO_2) after similar annealing. They considered this to be conclusive proof that the solid SiO did not exist in this temperature range. One should iterate that such is not necessarily true as the solid could be stable at these temperatures and become unstable at lower temperatures.

The work of Grube and Speidel[15] and of Konig[16] are in general disagreement with the other results reported above.

Grube and Speidel, in collecting the condensate from SiO gas in a Ni tube having a temperature gradient, observed that the "black glassy"

---

[30] L. Brewer, R. K. Edwards, J. D. McCullough, unpublished work, Berkeley, (1947).

material condensing out in the region below 900°C. had the diffuse ring at d = 3.6 A. but that the brown material which collected in the region of 1000°-1100°C. was crystalline Si and amorphous SiO_2. This collection was over a period of about 4 hours and these data would indicate that the SiO solid does not disproportionate at temperatures below 900°C.

Konig reported that thin films of SiO which had shown the characteristic ring in electron diffraction, gave, after having been heated to 900°C. in high vacuum[31], patterns which were unaltered.

The disagreement of these results with others is not readily explained.

The conclusion of Konig[16] that SiO solid permits of vaporization without decomposition should be reconsidered. Solid, identified SiO was placed on a tungsten wire and vaporization was effected in vacuum and the gas was condensed as a film on a collodion-coated platinum sheet. The film formed was identified as SiO by the characteristic ring. It is quite evident that conclusion is not necessarily valid with respect to consideration of decomposition to the solid mixture (Si + SiO_2), which, as is well known, would also evolve SiO gas on heating.

Heat of Formation of SiO Solid

The following relative solution reactions were used by von Wartenberg[20] to obtain the heat of formation of the SiO amorphous solid:

---

[31] H. Konig, private communication, July 20, 1951, adds that the silica glass had been previously thoroughly flushed with H_2 from the heating-decomposition of palladium hydride. The heating was for a few hours. The film was about 70 thick and was on a platinum sheet.

$$\text{I.} \quad 4\ AgClO_4 + Si + 6\ HF = 4\ Ag + 4\ HClO_4 + H_2SiF_6 + Q_I$$

$$\text{II.} \quad 4\ AgClO_4 + 2\ SiO + 12\ HF = 4\ Ag + 4\ HClO_4 + 2\ H_2SiF_6 + 2\ H_2O + Q_{II}$$

$$Si + H_2SiF_6 + 2\ H_2O = 6\ HF + 2\ SiO + Q_I - Q_{II}$$

$$\text{III.} \quad SiO_2 + 6\ HF = 2\ H_2O + H_2SiF_6 - 31$$

$$Si + SiO_2 = 2\ SiO + Q_I - Q_{II} - 31$$

$$Q_I - Q_{II} = +31 \pm 3$$

$$\text{IV.} \quad Si + SiO_{2_{cristobalite}} = 2\ SiO_{amorphous} \quad \Delta H^{\circ}_{298} = 0.0 \pm 3.0 \text{ kcal.}$$

The value of reaction III was based on Mulert's[32] work and is that given by Roth[33] who has corrected to cristobalite from SiO_2 glass.

The value of the heat of formation of SiO solid was given by van Wartenberg as 103±3 kcal.[34], but as this depends on which choice of corallary value is used for SiO_2 the value below is adopted to be consistent with subsequent calculations:

$$Si_s + \frac{1}{2}\ O_{2_g} = SiO_{amorphous}\ , \quad \Delta H^{\circ}_{298}{}^{35} = 104.6 \pm 3.0 \text{ kcal.}$$

Obviously equation IV shows that, within experimental error, that solid SiO is exactly equivalent to a mixture of its dissociation products from a standpoint of energy. Clearly if one were to assume that von Wartenberg's starting material were not (2 SiO) solid but rather the disproportionated solid ($Si + SiO_2$) mixture equation IV would be an identity.

---

[32] D. Mulert, Z. anorg. Chem. 75, 190 (1912).

[33] W. A. Roth, Tabelles annuelles, (Paris, 1937) p. 12- 7.

[34] The conventions used throughout this thesis relative to signs and symbols are those of G. N. Lewis and M. Randal, Thermodynamics and the Free Energy of Chemical Substances, (McGraw-Hill, N.Y., London).

[35] The standard reference temperature, 298.16°K., is to be understood whenever 298°K. is used in this thesis.

Because of this consideration it is quite critical to know if diffraction identification of samples of the actual material used in the calorimetry. It is known that Konig[21] found the characteristic line in electron diffraction on films formed on revaporizing samples of the material used by von Wartenberg. Von Wartenberg is not clear on this point, but there is reason to suppose that its identification was assured.[21] Hereafter, the assumption is made that equation IV is valid, and not the identity mentioned, in the estimation of the stability of the solid SiO.

Estimation of the Entropy and Stability of SiO Solid At the Temperatures 298°K. and 1200°K.

It is desirable to estimate whether the reaction $\frac{1}{2}\,Si_s + \frac{1}{2}\,SiO_{2\,cristobalite} = SiO_{amorphous}$ should be most likely to occur at low temperatures or at higher temperatures. Assuming the previously given heat value to be reasonably accurate it is quite evident that the entropy will be the decisive factor and consequently one must attempt a careful estimate of the entropy of the SiO solid. The estimation of the entropies of solids given by Latimer[36] has been used with wide success and it is employed here as a first approximation. Analogy with the titanium oxide system is used to modify the result somewhat as both the Ti and Si oxides seem to deviate from the rule. Table IV shows the comparison of the literature[37] values with the values obtained by the Latimer method.

---

[36] W. M. Latimer, J. A. C.S., 1480 (1951).

[37] Literature values taken from K. K. Kelley, Contributions to the Data on Theoretical Metallurgy, XI, Entropies of Inorganic Substances, (Bull. 477, Washington, 1950).

Table IV. Comparison of Entropies with

Estimates by Latimer Method

	Literature S°_{298}	Latimer S°_{298}	$S^{\circ}_{Lit.} - S^{\circ}_{Latimer}$
TiO_{2_c}	12.01 cal./mole/°C.	10.8 cal./mole/°C.	+1.03 cal./mole/°C.
TiO_c	8.31	10.3	-2.0
SiO_{2_c}	10.1	9.1	+1.00
$SiO_{crystalline}$		8.6	

Applying the same correction to the estimate by the Latimer method for SiO as for TiO, one gets S°_{298} (SiO_c) = 6.6 e.u.

The reliability of this value may be judged by comparison with an independent additional estimate on the basis of the very good correlation of the entropies of formation per oxygen equivalent of the oxides of group IV of the periodic table. This is presented in Table V below.

It is evident that a very good estimate of the entropy of formation of any oxide of this group is possible and that one then arrives at an estimate of S°_{298} (SiO_c) = 6.1 entropy units. The value of S°_{298} (SiO_c) = 6.4 entropy units is adopted and is believed not to be in error more than 1 entropy unit. The value estimated by Gel'd and Kochnev[11] is inacceptably high.

The randomness entropy in the amorphous form of this simple compound should in no case exceed R ln 2 and is roughly estimated to be 0.9 entropy units on the assumption that it would be about the same as Simon and Lange[38] gave for SiO_2 glass.

The entropy of SiO amorphous solid is taken as

$$S^{\circ}_{298}\ (SiO_{amorphous}) = 7.3 \text{ entropy units}$$

From the equation $\Delta F^{\circ}_T = \Delta H^{\circ}_T - T\Delta S^{\circ}_T$, the free energy is calculated for the stability reaction.

$$\frac{1}{2}\ Si_s + \frac{1}{2}\ SiO_{2\,cristobalite} = SiO_{amorphous}$$

$$\Delta S^{\circ}_{298.16} = -\ 0.05 \pm 1.0 \text{ entropy units}$$

$$\Delta F^{\circ}_{298.16} = 0.0 \pm 3.0 + \frac{298.16}{1000} \times (0.05 \pm 1.0)$$

$$= 0.0 \pm 3.3 \text{ kcal.}$$

---

[38] F. Simon and F. Lange, Z. Physik 15, 312 (1923).

Table V. ΔS°_{298} of Formation[39] of Oxides of Group IV

			Deviation from Average	
1/2 SiO_2	-21.8	cal./oxygen equivalent/°C.	1.1	cal./oxygen equivalent/°C.
TiO	-22.8	"	.1	"
1/3 Ti_2O_3	-22.6	"	.3	"
1/5 Ti_3O_5	-22.3	"	.6	"
1/2 TiO_2	-22.1	"	.8	"
1/2 ZrO_2	-23.3	"	.4	"
1/2 SnO_2	-23.6	"	.7	"
SnO	-23.3	"	.4	"
PbO	-23.4	"	.5	"
1/2 PbO_2	-23.1	"	.2	"
1/4 Pb_3O_4	-23.5	"	.6	"
Average	-22.9	"		

[39] Obtained using the data of reference 37.

The result is indicisive as far as stability at room temperature is predicted. The reaction would have a slightly less tendency to go if quartz were used instead of the cristobalite above.

It now becomes necessary to attempt an estimate of the effect of high temperatures on the above reaction. It is necessary then to estimate a suitable heat capacity for SiO solid. Earlier in this paper the experimental value of C_p = 9.19 cal./mol at 338°K. for the amorphous solid was given. In order to estimate a heat capacity equation for the SiO solid the relation discussed by Lewis for isotropic crystalline solids will be used. This supposes that the C_v of any one of this class of solids will be equal to the same function of (T/Θ_c) where T is the absolute temperature and Θ_c is a characteristic constant for the particular solid being considered. It is supposed that one may then use the following equation given by Kelley[40] for TiO solid and adjust the parameters on this basis, so that a fit is obtained for the temperature at which the C_p is experimentally known.

$$C_p\ (TiO_c) = 10.57 + 3.60\text{x}10^{-3}\ T - 1.86\text{x}10^{-5}\text{x}T^{-2}\ \text{cal./mol}$$

Therefore one may write for the temperature 338°K.

$$9.19 = 10.57 + 3.60\text{x}10^{-3}\ T\ \frac{\Theta_{TiO}}{\Theta_{SiO}} - 1.86\text{x}10^{5}\text{x}T^{-2}\ \frac{\Theta_{TiO}}{\Theta_{SiO}}^{-2}$$

Using the value of T and solving for $\frac{\Theta_{TiO}}{\Theta_{SiO}}$ one may then write the general equation

$$C_{p\ (SiO\ amorphous)} = 10.57 + 2.98\text{x}10^{-3}\ T - 2.72\text{x}10^{5}\ T^{-2}$$

---

[40] K. K. Kelley, Contributions to the Data on Theoretical Metallurgy X. High-Temperature Heat-Content, Heat-Capacity, and Entropy Data for Inorganic Compounds, (Bull. 476, Washington, 1949) p. 192.

Using this expression and integrating the equation as indicated one gets:

$$(SiO)_{crystalline},\ S^{\circ}_{1200^{\circ}K.} = S^{\circ}_{298.16} + \int_{298^{\circ}K.}^{1200^{\circ}K.} C_p \, d \ln T$$

$$= 22.4 \text{ entropy units}$$

Again one may check this estimate by making an independent estimate. The entropies of formation at 1200°K. are tabulated in Table VI. From this one gets a value of $S^{\circ}_{1200}\ (SiO)_{crystalline} = 21.0$ entropy units, but the correlation is no better than 3 entropy units. The heat capacity equation is thus considered to be sufficiently verified and the entropy value yielded by it is adopted, and this entropy is supposed valid within at least 3 e.u. For the amorphous SiO solid one again adds on 0.9 e.u.

$$S^{\circ}_{1200}\ (SiO_{amorphous}) = 23.3 \text{ e.u.}$$

The $H^{\circ}_{1200} - H^{\circ}_{298}$ one gets from the heat capacity equation is 9.7 kcal. for amorphous SiO. At 1200°K. for $1/2\ Si_c + 1/2\ SiO_{2\,cristobalite} = SiO_{amorphous}$

$$\Delta S^{\circ} = 1.5 \pm 3.0 \text{ e.u.}$$

$$\Delta H^{\circ} = 1.0 \pm 3.0 \text{ kcal.}$$

$$\Delta F^{\circ} = -\ 0.9 \pm 6.6 \text{ kcal.}$$

Once more the result is indecisive. It appears that the entropy of the reaction is increasing with temperature and that higher temperatures would tend to favor the formation of the SiO amorphous solid. The errors indicated above are not probable errors but are believed to be maximum deviations possible. In view of the fact that the C_p value used was considered to be a lower limiting value, the entropy of the reaction is likely to be somewhat more favorable toward SiO stability at higher temperatures.

Table VI. ΔS°_{1200} of Formation[38,40] of Oxides of Group IV

			Deviation from Average	
1/2 SiO_2	-20.6	cal./oxygen equivalent/°C.	.8	cal./oxygen equivalent/°C.
TiO	-22.2	"	.8	"
1/3 Ti_2O_3	-20.5	"	.9	"
1/5 Ti_3O_5	-20.1	"	1.3	"
1/2 TiO_2	-21.2	"	.2	"
1/2 SnO_2	-23.7	"	2.7	"
Assume (SiO), Average	-21.4	"		

In conclusion of these calculations it is seen that the formation of solid SiO from Si and SiO_2 mixtures is not at all ruled out and remains an intriguing possibility, particularly at higher temperatures.

Recalculation and Correlation of Existing Thermodynamic and Thermochemical Data

Four equilibria involving gaseous and solid SiO have been reported to have been studied by the methods indicated:

(a) $SiO_s = SiO_g$	Effusion method (900°-1155°C.)
(b) $Si_s + SiO_{2_s} = 2\ SiO_g$	Effusion method (1063°-1187°C.)
(c) $H_2 + SiO_{2_s} = SiO_g + H_2O_g$	Flow method (1200°-1500°C.)
(d) $SiO_{2_s} = SiO_g + 1/2\ O_{2_g}$	Effusion method (1567°-1678°C.)

Previous calculations (except in the last case) have been by the method of plotting the logarithm of the equilibrium constant against the reciprocal of the absolute temperature and taking the slope of the ensuing best straight line as the heat of reaction for the mean temperature of measurement. The values so obtained were then calculated to the standard reference temperature of 298°K.[35] assuming the heat capacity of SiO gas to be equal to that of CO gas.

Though the method of slopes is quite necessary for the obtaining of heats of reaction in cases where the entropy of reaction is not known, values yielded by this method should be considered to be only tentative in the event that the entropy may be otherwise ascertained. This is because small errors in the data may produce large errors in the slope. Furthermore, obtaining heats of reaction by the method of slopes yields

generally only one value regardless of the number of observations made and assigns this averaged value to an average temperature. For example, Schafer and Hornle, working at 5 different temperature, made 21 measurements of the equilibrium constant in reaction (b), and this yielded but one value of the heat of reaction and was assigned to the average temperature of 1125°C. On the other hand, if the entropy is known, it is clear that every equilibrium constant leads to a ΔF°_{T} of reaction and hence, by the equation, $\Delta F^{\circ}_{T} = \Delta H^{\circ}_{T} - T\,\Delta S^{\circ}_{T}$, to a value of ΔH°_{T} for the particular temperature of each measurement. Accurate heat capacity data would then allow one to correct the ΔH°_{T} values so yielded to a common reference temperature and thus 21 values of the heat of reaction could be obtained. The thermodynamic functions for SiO gas have been calculated from molecular constant data by the author and are presented later, so that calculations of the accurate type just described were possible and have been carried out on all of the pertinent equilibria.

It is convenient to effect the calculation of ΔH°_{o} or ΔH°_{298} (ΔH° at the reference temperature of 0°K. or 298°K., respectively) from the value of ΔF°_{T} without explicit use of entropies or heat capacities. This common practice is described elsewhere[41] and makes use of the functions

$$\frac{\Delta F^{\circ}_{T} - \Delta H^{\circ}_{o}}{T} \text{ or } \frac{\Delta F^{\circ}_{T} - \Delta H^{\circ}_{298}}{T} .$$

Thermodynamic Functions. The tabulations of Hertzberg[42] yield for SiO gas the following molecular constants:

---

[41] H. S. Taylor and S. Glasstone, A Treatise on Physical Chemistry, Volume One, Atomistics and Thermodynamics (Van Nostrand, New York, 1942) P. 608.

[42] G. Hertzberg, Molecular Spectra and Molecular Structure, Vol. I, Spectra of Diatomic Molecules (Van Nostrand, Toronto, New York, London, 1950).

Moment of inertia, $I = 38.6 \times 10^{-4}$ g-cm.^{2}

Fundamental vibrational frequency, $= 1{,}236$ cm.$^{-1}$

The molecular weight is taken as 44.06 g. in this work and all fundamental constants are taken to agree with the National Bureau of Standards.[43] The common methods[37,40] have been used to obtain the thermodynamic functions listed in Table VII. Only the $^1\Sigma^+$ electronic state need be considered in these calculations as the nearest known state, $^1\Pi$, is 42835.3 cm.$^{-1}$ higher and by analogy with CO[42] gas there is no reason to expect any other lower lying states. The symmetry of the molecule is simply one. No anharmonicity correction was considered in view of the fact that high vibrational levels are not largely populated even at the higher temperatures so that the correction would be quite small. (The vibrational contribution to the entropy at 1400°K. is only 0.655 entropy units).

The similar functions for other gaseous molecules appearing in later calculations as well as those for Si metal were taken from the National Bureau of Standards tabulations.[44] The values for SiO_2, tridymite and cristobalite, are for the forms appropriate at the temperatures considered and were obtained by combining the values of $S^\circ_T - S^\circ_{298}$ and of $H^\circ_T - H^\circ_{298}$ from Kelley[40] with the values of S°_{298} listed in Kelley[37] and the following values of $H^\circ_{298} - H^\circ_0$ which we obtained by graphical integration of the heat capacity data of Anderson:

---

[43] Selected Values of Properties of Hydrocarbons, American Petroleum Institute Research Project 44, National Bureau of Standards (U.S. Government Printing Office, Washington, D. C., December 31, 1947.)

[44] Selected Values of Chemical Thermodynamic Properties, National Bureau of Standards (U. S. Government Printing Office, Washington, D. C., 1947, et seq.).

[45] C. T. Anderson, J. A. C. S. 58, 568 (1936).

Table VII. Thermodynamic Functions for Gaseous SiO

T°K.	$\frac{F_T^\circ - H_o^\circ}{T}$ cal./mole/°C.	$\frac{H_T^\circ - H_o^\circ}{T}$ cal./mole/°C.	S_T° cal./mole/°C.
298.16	-43.548	6.986	50.534
900	-51.524	7.587	59.111
1000	-52.328	7.673	60.001
1100	-53.062	7.751	60.813
1200	-53.739	7.821	61.560
1300	-54.368	7.884	62.252
1400	-54.954	7.941	62.895
1500	-55.504	7.992	63.496
1600	-56.021	8.039	64.060
1700	-56.510	8.081	64.591
1800	-56.973	8.120	65.093
1900	-57.413	8.156	65.569
2000	-57.832	8.188	66.020

	$H^\circ_{298} - H^\circ_o$
quartz----------	1658 ± 10 cal./mol^{-1}
tridymite--------	1701 ± 10 cal./mol^{-1}
cristobalite-----	1667 ± 10 cal./mol^{-1}

The error is a simple estimate. The value for quartz is only incidentally recorded.

When considering a particular reaction the $\frac{\Delta F^\circ_T - \Delta H^\circ_o}{T}$ was ordinarily taken at the even temperature values and then interpolation to the desired temperatures was done by a sensitive graphical method. In most cases too many significant figures have been carried, but this has usually been qualified by indicating the probable uncertainty.[46]

The stable SiO_2 allotrope in the region 1143°-1743°K. is tridymite and from 1743°-1983°K. cristobalite is stable.[47] Because of the lack of thermochemical data for tridymite, Grube and Speidel[48] used instead the data for cristobalite while Schafer and Hornle[13] used the data for quartz. The latter report that SiO_2 glass crystallizes rapidly in the presence of SiO gas hence obviously calculations should apply to a crystalline form and not the glass. This observation has been made also by the author and, in addition, it has been noted that amorphous SiO_2

---

[46] The probable error used hereafter except where noted is defined as follows:

$$r = 0.6745 \frac{\Sigma \Delta_i^2}{(n-1)}$$

where r = probable error
Δ_i = deviation of the i'th result from the average result
n = total number of results averaged

[47] F. P. Hall and H. Insley, J. Am. Ceram. Soc. (Part II, November 1, 1947) p. 19.

[48] G. Grube and H. Speidel, Z. Elektrochem. 53, 341 (1949).

transforms at 900°C. to the thermodynamically stable form, tridymite, in the presence of solid Si and, consequently, gaseous SiO. It is to be noted that ordinarily this transformation is not observed unless a flux has been used.[47]

Kelley's tables[37,40] of entropies and heat content functions have been utilized to obtain consistent thermochemical values for tridymite. It is believed that this is less presumptious than the assuming of incorrect allotropic forms for purposes of calculations.

Thermochemical Data Used. In many cases the author has not used the same thermochemical data which have been used in previous calculations or the equilibrium data. The values used herein are therefore listed below, and their sources indicated.

$Si_c + O_{2_g} = SiO_{2_{cristobalite}}$	$\Delta H^\circ_{298} = -209{,}330 \pm 180$ cal./mole		[49]
	$\Delta H^\circ_o = -208{,}020 \pm 180$	"	[50]
$SiO_{2_{cristobalite}} = SiO_{2_{tridymite}}$	$\Delta H^\circ_o = 457 \pm 523$	"	[51]
$Si_c + O_{2_g} = SiO_{2_{tridymite}}$	$\Delta H^\circ_o = -207{,}633 \pm 703$	"	[52]

---

[49] K. K. Kelley, personal communication, July (1951). His laboratory will soon publish these results, which are from very careful bomb calorimetry.

[50] Correction to 0°K. was accomplished by use of $(H^\circ_{298} - H^\circ_o)$ value, previously given in this thesis, and by corresponding data for the other molecules.[44]

[51] The transition temperature[47] for $SiO_{2_{cristobalite}} = SiO_{2_{tridymite}}$ is 1470°C. and therefore $\Delta F^\circ_{1470} = 0$. This may be combined with heat content and entropy data already cited to obtain the ΔH°_o value given.

[52] The value here results from combination of the preceding values.

$H_2O_g = H_{2_g} + \frac{1}{2} O_{2_g}$	$\Delta H^\circ_o = 57{,}104 \pm 3$ cal./mole	53
$\frac{1}{2} O_{2_g} = O_g$	$\Delta H^\circ_o = 58{,}639 \pm 23$ "	54
$Si_c = Si_g$	$\Delta H^\circ_{298} = 90{,}000 \pm 2500$ "	55a
	$\Delta H^\circ_o = 88{,}962 \pm 2500$ "	56

The value given for the heat of sublimation of Si requires some explanation as Schafer and Hornle[13] have questioned the validily of the data of Baur and Brunner[55b] on which it is based. These workers used the method of the moving mercury drop and measured the boiling temperature of Si (contained in a sintered alumina tube) as a function of pressure. Schafer and Hornle suppose that the auxilliary reaction,

$$Al_2O_{3_s} + 2\ Si_l = Al_2O_g + 2\ SiO_g$$

would cause too high an apparent vapor pressure of Si to be observed. Using the data of Brewer and Searcy[57] one finds that the equilibrium total pressure for the above reaction is, indeed, 10^2 or 10^3 times larger than experimentally observed. The rate of attack of the liquid Si on the Al_2O_3 wall surface must then be fairly slow, for otherwise total transference of the Si as SiO_{gas} would take place before the temperature

---

53 This value, within 3 calories of the value appearing in the National Bureau of Standards tabulations[44], was taken from an earlier publication of the same source.

54 A. G. Gaydon, Dissociation Energies and Spectra of Diatomic Molecules, (Chapman and Hall, London, 1947) p. 63.

55a L. Brewer, National Nuclear Energy Series, Vol. 19B, Paper 3. (McGraw-Hill, New York, 1950) p. 26.

55b The data used by Brewer in selecting this value was taken from E. Baur and R. Brunner, Helv. Chim. Acta 17, 958 (1934).

56 Corrected to 0°K. using National Bureau of Standards functions.[44]

57 L. Brewer and A. Searcy, "The Gaseous Species of the Al - Al_2O_3 System", JACS 73, 5308 (1951).

of the experiment could be reached.

In the method of the moving mercury drop, the inert gas pressure in a reaction chamber containing also the liquid whose vapor pressure is being measured is balanced by a fixed reference pressure in an interconnected chamber, and the balance is observed by the movement of a separating drop of Hg in a capillary section. The reaction chamber is then slowly and continuously raised in temperature and the Hg drop is observed to slowly move until the boiling temperature for the particular pressure is reached, whereupon the drop suddenly accelerates because of the faster rate of vaporization. It is of note that condensation in the cooler end of the reaction chamber will be occurring at all times and that the equilibrium partialpressure of the vaporizing material will never be attained throughout. A reaction of the type supposed by Schafer and Hornle has no reason to display any discontinuity in its rate of vaporization, and further, the presence in the vapor phase of its gaseous reaction products does not alter appreciably the reaction chamber pressure against which the liquid Si must boil.

Therefore, it is believed that the heat of vaporization listed above and based on the data of Baur and Brunner need not be considered widely in error. The error affixed this value is a simple estimate.

Form of Presentation of Equilibria Calculations. In calculating the various data which may be used to obtain the heat of formation and the energy of dissociation of SiO gas, the author has first calculated the heat of the particular reaction studied so that this may be recorded independently of the introduction of any corallary thermochemical values. Values of the heat of reaction are calculated for 0°K., 298°K., and also for the temperature to which the experimenters had assigned their values

(recorded for comparison) obtained by the method of slopes.

Data of Gel'd and Kochnev[11]. These experimenters introduced solid SiO condensate as the starting material in their effusion cell and believed therefore that they were measuring the sublimation pressure of solid SiO, that is reaction (a), $SiO_s = SiO_g$. Their principal additional supporting argument that they were working with reaction (a) instead of (b), $Si_s + SiO_2 = 2\ SiO_g$, was that the observed pressure of SiO gas did not vary with the amount of material effused from the cell. This argument is erroneous since this is precisely what should be observed for the invariant system involving the two solid phases.

On the other hand, a preceding discussion in this paper strongly suggests that disproportionation of the solid SiO to the component Si and SiO_2 solid phases is to be expected at temperatures in the region of the measurements. Experimental proof that such is the case will be given later.

Therefore these measurements have been recalculated as corresponding to reaction (b) and hence with the measurements of Schafer and Hornle which are later treated. The calculations appear in Table VIII.

Summary of results:

Reaction studied:	$Si_c + SiO_{2_{tridymite}} = 2\ SiO_g$	
11 measurements yield:	ΔH°_o	= 170,644 ± 1,217 cal./mole
	ΔH°_{298}	= 171,206 ± 1,217 "
	ΔH°_{1273}	= 167,171 ± 1,217 "
authors obtained: (though they assumed a different reaction)	ΔH°_{1273}	= 152,038 cal./mole

Table VIII.

Effusion Data of Gel'd and Kochnev

$$Si_c + SiO_{2\,tridymite} = 2\ SiO_g$$

	$P_{m.m.}$ of Hg	calories per mole per °C.			calories per mole	
T°K.	log P	$\frac{\Delta F^\circ_T}{T}$	$\frac{\Delta F^\circ_T - \Delta H^\circ_o}{T}$	$\frac{\Delta H^\circ_o}{T}$	ΔH°_o	$\Delta H^\circ_{o\,av.}$
1173	$\bar{4}.147$	61.626	-82.056±0.200	143.682	168,539	
	$\bar{4}.128$	61.799	" "	143.855	168,742	169,139
	$\bar{5}.998$	62.989	" "	145.045	170,138	
1273	$\bar{3}.206$	51.934	-81.849±0.200	133.783	170,306	
	$\bar{3}.278$	51.275	" "	133.124	169,467	170,402
	$\bar{3}.195$	52.035	" "	133.884	170,434	
	$\bar{3}.112$	52.794	" "	134.643	171,401	
1373	$\bar{2}.214$	42.710	-81.631±0.200	124.341	170,720	
	$\bar{2}.134$	43.442	" "	125.073	171,725	171,708
	$\bar{2}.058$	44.137	" "	125.768	172,679	
1428	$\bar{2}.555$	39.589	-81.509±0.200	121.098	172,928	172,928

Total average ΔH°_o = 170,644

Probable error these data ±931

Probable error in functions ±286

ΔH°_o = 170,644 ± 1,217

Data of Grube and Speidel[15]. Reaction (c), $H_{2_g} + SiO_{2_s} = SiO_g + H_2O_g$, was presumed to measured, and calculations are made on this basis. These measurements were carried out by passing H_2 gas through solid SiO_2 in a sintered alumina tube. The resulting SiO and H_2O gases passed through a porous alumina plug and over iron turnings where the Si from the SiO was trapped, and the amount ascertained by analysis. The H_2 pressure was 1 atmosphere and the H_2O pressure was assumed equal to the SiO pressure. Table IXa and IXb presents a tabulation of the data and calculations of this work. Each value of P_{SiO} listed at a given temperature corresponds to a different rate of flow of H_2 gas in the system and was taken from the experimenters' plot of P_{SiO} vs. flow rate in which they extrapolated to zero flow rate to obtain the pressure corresponding to the ideal static equilibrium. No dependence of the equilibrium pressure on the flow rate is evident from these data within the region of variation of flow rates considered. Therefore, each pressure measurement is here considered as an independent datum. Moreover, the data is divided into two sets as part of the measurements must be assumed to involve the SiO_2 in the tridymite modification and part in the cristobalite modification.

Summary of results:

Reaction studied: $H_{2_g} + SiO_{2_{tridymite}} = SiO_g + H_2O_g$

11 measurements yield: $\Delta H^\circ_0 = 134{,}749 \pm 1403$ cal.

$\Delta H^\circ_{298} = 135{,}476 \pm 1403$ "

$\Delta H^\circ_{1600} = 128{,}402 \pm 1403$ "

Reaction studied: $H_{2_g} + SiO_{2_{cristobalite}} = SiO_g + H_2O_g$

3 measurements yield: $\Delta H^\circ_0 = 136{,}093 \pm 701$ cal.

$\Delta H^\circ_{298} = 136{,}853 \pm 701$ "

Authors obtained from slope

of all the above data: $\Delta H^\circ_{1600} = 112{,}000 \pm 6{,}000$ cal.

Table IXa.

Calculation of Flow Data of Grube and Speidel

$$H_{2_g} + SiO_{2_{tridymite}} = H_2O_g + SiO_g$$

	P(mm of Hg)	calories per mole per °C.			calories per mole	
T°K	P_{SiO}	$\frac{\Delta F^\circ_T}{T}$	$\frac{\Delta F^\circ_T - \Delta H^\circ_0}{T}$	$\frac{\Delta H^\circ_0}{T}$	ΔH°_0	$\Delta H^\circ_{0_{av.}}$
1473	0.0244	41.128	-49.486±0.200	90.614	133,474	
	0.0133	43.530	" "	93.016	137,013	134,686
	0.0267	40.768	" "	90.254	132,944	
	0.0178	42.375	" "	91.861	135,311	
1573	0.0600	37.556	-49.237±0.200	86.793	136,525	
	0.1011	35.473	" "	84.710	133,249	134,916
	0.1056	35.245	" "	84.482	132,890	
	0.0556	37.857	" "	87.094	136,999	
1673	0.2767	31.469	-48.998±0.200	80.467	134,621	
	0.2756	31.486	" "	80.484	134,650	134,614
	0.2789	31.439	" "	80.437	134,571	

Total Average ΔH°_0 = 134,749

Probable error in these data ± 1,048

Probable error in functions ± 355

ΔH°_0 = 134,749±1,403

Table IXb.

$$H_2 + SiO_{2_{cristobalite}} = H_2O_g + SiO_g$$

1773	0.6233	28.241	-48.502±0.100	76.743	136,065	
	0.5900	28.460	" "	76.962	136,454	136,093
	0.6511	28.068	" "	76.570	135,759	

Total Average ΔH°_0 = 136,093

Probable error in these data ± 348

Probable error in functions ± 355

ΔH°_0 = 136,093±701

Data of Schäfer and Hörnle[13]. These workers used the effusion method and introduced briquetted mixtures of Si and SiO_2 solids as starting material. They were very careful to establish the composition of their effusion species as has been previously discussed. Calibration of the equipment was performed. Tables Xa. and Xb. list these calculations and very nicely reveal the exceptional quality of the work.

These data are divided into two groups corresponding to the temperature range 1336° - 1429°K, table Xa., and to the temperature 1460°K, table Xb.. All data are calculated on the assumption of the reaction indicated. The most striking revelation of this work calculated in this precise manner is that ΔH_0° has remained constant through the temperature 1429°K. in a very satisfying manner, but has, at the temperature 1460°K., changed by an amount which is beyond the experimental error. One must then suppose that, either some new competing reaction is setting in, or that some new reaction is taking place. Schäfer and Hörnle thought that the point for this temperature was perhaps too far off the straight line slope plot and believed that possibly the reaction being studied might have been one involving a higher molecular weight molecule as $(SiO)_x$, and they are conducting more careful studies of the equilibrium studied by Grube and Speidel in order to verify this assumption.

The previous calculations in this paper with respect to the reactions, $Si_c + SiO_{2_c} = SiO_{amorphous}$, have indicated the possibility of the SiO solid becoming stable at these higher temperatures. It was presumed, therefore, that the temperature for this transition might well be at 1445°±15°K. (1172°C.), so that the effusion measurements at 1460°K. should correspond to the reaction $SiO_{amorphous} = SiO_g$. If this were the case, the ΔH_0° calculated on the basis of the other reac-

tion would give a value too high as is found.

Summary of Results:

Reaction studied: $Si_c + SiO_{2\,tridymite} = 2\ SiO_g$

17 measurements yield: $\Delta H^\circ_0 = 164{,}242 \pm 445$

$\Delta H^\circ_{298^\circ K} = 165{,}940 \pm 445$ cal.

$\Delta H^\circ_{1298^\circ K} = 159{,}973 \pm 445$ cal.

Authors obtained from slope of all the above data: $\Delta H^\circ_{1298^\circ K} = 154{,}000$ cal.

Table Xa.

$$Si_{(c)} + SiO_{2_{tridymite}} = 2\ SiO_g$$

Calculation of Effusion Data of Schäfer and Hörnle

T°K	P_{SiO} m.m. Hg	$\frac{\Delta F^\circ_T}{T}$	$\frac{\Delta F^\circ - \Delta H^\circ_o}{T}$	$\frac{\Delta H^\circ_o}{T}$	ΔH°_o	ΔH°_o av.
1336	0.0250	41.024	-81.713±0.200	122,737	163,977	
	0.0232	41.325		123,038	164,379	164,251
	0.0231	41.338		122,051	164,396	
1367	0.0491	38.343	-81.643	119,986	164,101	
	0.0481	38.423		120,066	164,130	
	0.0444	38.743		120,386	164,568	164,311
	0.0484	38.398		120,041	164,096	
	0.0436	38.812		120,455	164,662	
1398	0.0944	35.744	-81.573	117,317	164,009	
	0.0939	35.764		117,337	164,037	
	0.0946	35.734		117,307	163,995	164,190
	0.0872	36.060		117,633	164,451	
	0.0871	36.064		117,637	164,457	
1429	0.1727	33.344	-81.507	114,851	164,122	
	0.1599	33.649		115,156	164,558	164,211
	0.1721	33.358		114,865	164,142	
	0.1758	33.273		114,780	164,021	

Total average ΔH°_o = 164,242

Probable error these data ± 159

Probable error in functions ± 286

ΔH°_o = 164,242 ± 445

Table Xb.

Calculated on the Basis of the Same Reaction as Above

1460	0.2697	31.571	-81.440	113,011	164,996	
	0.2562	31.775		113,215	165,294	165,546
	0.2402	32.032		113,472	165,669	
	0.2873	32.412		113,852	166,224	

Total average ΔH°_o = 165,546

Probable error these data ± 342

Data of Brewer and Mastick[12]. König[16] and later Brewer and Mastick considered the possibility that SiO_2 solid may not vaporize as the gaseous SiO_2 species but instead may vaporize by dissociation according to reaction (d.), $SiO_{2s} = SiO_g + 1/2\ O_{2g}$. König obtained the SiO solid as the condensate on the vacuum chamber walls when he heated a SiO_2 glass tube to about 2000°K. by an internal close-fitting tungsten spiral. Brewer and Mastick conducted three effusion measurements from a platinum chamber charged with SiO_2 solid, and they found that their results submitted best to calculation assuming reaction (d.).

Their data have been recalculated here, Table XI, also on the assumption of reaction (d.). Two errors have accounted for a discrepancy of about 5 kcal. between the value which they obtained (not directly reported) and the one which is here calculated. The first error is quite small and is due to non consideration of the amount of dissociation of the O_2 at these temperatures and pressures. Actually, P_{O_2} at 1951°K. is only 3.88x P_O. This effect has been considered in these new calculations. The second error was due to obtaining the $F^\circ - H^\circ_0/T$ function for SiO gas by extrapolation from values at 2000°K and 3000°K from a table which contained a typographical mistake[58]. The basis for conclusion that the volatilization of SiO_2 probably takes place through its decomposition, according to the reaction below assumed, is considerably strengthened by these new calculations and the agreement with the data of Schäfer and Hörnle.

Summary of Results:

Reaction assumed studied:	$SiO_{2\,cristobalite} = SiO_g + 1/2\ O_{2g}$
3 measurements yield:	$\Delta H^\circ_0 = 186{,}578 \pm 2{,}710$ cal.
	$\Delta H^\circ_{298.16} = 189{,}029 \pm 2{,}710$ cal.

Authors did not directly report a value for this reaction.

[58] This error is in the value at 2000°K appearing in MDDC-1462, W. M. Latimer

Table XI

Calculation of Effusion Data of Brewer and Mastick

$$SiO_{2\,cristobalite} = SiO_g + 1/2\ O_{2g}$$

	P(atm)		calories per mole per °C.		calories per mole	
T°K	P_{SiO}	$K_{(eq)}$	$\frac{\Delta F^\circ_T}{T}$	$\frac{\Delta F^\circ_T - \Delta H^\circ_0}{T}$	$\frac{\Delta H^\circ_0}{T}$	ΔH°_0
1840	4.06×10^{-6}	5.07×10^{-9}	37.954	-61.130±0.100	99.084	182,315
1933	7.47×10^{-6}	1.22×10^{-8}	36.206	-61.038±0.100	97.244	187,972
1951	7.02×10^{-6}	1.34×10^{-8}	36.019	-61.032±0.100	97.051	189,347

Total Average ΔH°_0 = 186,578

Probable error in these data ± 2,515

Probable error in functions ± 195

ΔH°_0 = 186,578±2,710

Summary. The results of the calculations are summarized in Table XII. The values resulting from the data of Schäfer and Hörnle are clearly to be recommended and are seen to be satisfactorily supported by the other work.

The $D_0(SiO)$ of 7.339 ± 0.134 electron volts is in close agreement with the value of 7.4 obtained by Herzberg from a linear Birge-Sponer extrapolation of the spectroscopically obtained vibrational energy terms for the $^1\Sigma^+$ state (ground state). Gaydon had assumed a positive correction to this extrapolation and obtained 7.8 e.v. The linear extrapolation for the $^1\Pi$ gave 8.9 e.v. for the ground state assuming that the $^1\Pi$ state dissociated to normal atomic produces. Therefore, it appears that the extrapolation or the assumption are not reliable.

The conjecture of König and of Brewer and Mastick that SiO_2 may vaporize by the process of dissociation is well supported by the concordance of the latter's data with that of Schäfer and Hörnle. The alternate explanation of normal vaporization is unnecessary but is not ruled out and there are yet no sufficiently reliable data to decide the point.

The discontinuity in a plot of $\Delta H_{\circ}^{\circ}$ versus temperature for the reaction $Si_c + SiO_2 = 2\ SiO_g$ which occurs between 1429°K and 1460°K is outside the experimental error and requires explanation. The direction of the effect would be in agreement with the assumption of the solid SiO becoming stable at 1172 ± 15°C. with respect to its formation from Si and SiO_2 solids. This explanation would make unnecessary the assumption of polymers of the SiO gaseous molecule as Schäfer and Hörnle have made with respect to the excessive curva-

Table XII

Summary of Thermochemical Values for SiO_g

Authors of Experimental Data, Reaction Studied, Method of Study	No. of Measurements	Heat of Formation ($Si_c + 1/2\ O_{2g} \longrightarrow SiO_g$)		Dissociation Energy ($SiO_g \longrightarrow Si_g + O_g$)	
		Schäfer and Hörnle Calculations 298.16°K	These Calculations 298.16°K	Calories	Electron-volts
		(calories)	(calories)		
Gel'd and Kochnev $Si_c + SiO_{2\,tridymite} = 2SiO_g$ Effusion Method	(11)	-24,600	-18,212±960	166,096±3,483	7.200±0.151
Grube and Speidel $H_{2g} + SiO_{2\,tridymite}$ and cristobalite $=$ $SiO_g + H_2O_g$ Flow Method	(14)	-30,100	-15,291±2026	163,175±4549	7.074±0.197
Schäfer and Hörnle $Si_c + SiO_{2\,tridymite} = 2SiO_g$ Effusion Method	(17)	-23,200	-21,411±574	169,296±3097	7.339±0.134
Brewer and Mastick $SiO_{2\,cristobalite} = SiO_g + 1/2\ O_{2g}$ Effusion Method	(3)		-21,159±2890	169,043±5,413	7.328±0.235

Recommended Values for SiO_g

Standard Heat of Formation $\Delta H^\circ_{298.16} = -21,411 \pm 574$ cals. per mole

$\Delta H^\circ_o = -21,695 \pm 574$ cals. per mole

Dissociation Energy $D_o = 7.339 \pm 0.134$ e.u.

$= 169,296 \pm 3097$ cals. per mole

ture of their log P_{SiO} vs. 1/T plot in this same temperature region. This explanation would not in any way account for the poor agreement of the results of Grube and Speidel with the other work. It is to be noted that their flow method involved the passage of the SiO gas through a porous aluminia plug and along a sintered alumina tube. They remarked that the tube became glazed after use showing attack and they therefore took precautions to discard any measurements until a tube had become well glazed. The pressure of SiO_g they measured is less than would be expected on the basis of the other experimental results, and it is possible that, in spite of this care, a continuing slow attack by the SiO gas toward the formation of sillamanite took place in agreement with what would be thermodynamically predicted. It is also possible that a depolymerization at these temperatures of $(SiO)_x$ has taken place as Schäfer and Hörnle consider. The possibility that the reaction taking place is entirely different than the one assumed for calculation should not be ignored. For example, a gas such as $Si(OH)_x$ might be formed. A molecule such as this might perhaps be indicated in the formation of turbine blade deposits which involve in some manner the transport of SiO_2 through the gaseous steam phase[59].

[59] F. G. Straub, University of Illinois Bulletin, 43, No. 59, 1-92 (1946).

Experimental (A)

X-ray Diffraction Studies on ($Si+SiO_2$) Mixture at High Temperatures.

If the mixture of ($Si+SiO_2$) of the composition SiO should become unstable with respect to the formation of the solid SiO at some high temperature, then X-ray diffraction patterns at this temperature should reveal a tendency toward disappearance of these phases. The following experiments were under taken to see if such an effect might be observed in the region of the temperature of the measurements of Gel'd and Kochnev.[11]

Materials. Si powder from A. D. Mackay Co., New York, having a reported purity of 99.87%, was used in all this work. Combustion analysis at 900°C. showed that carbon content was less than 0.007%. Spectroscopic analysis set the following upper limits of impurities: 0.015% Mn, 0.01% Ca, 0.004% Cr, 0.004% Ti+Zr, 0.01% P, 0.004% Co+Ni.

The SiO_2, in the form of silica get, was extremely floculent and finely divided and passed a No. 400 mesh screen[60]. It contained 9.03% adsorbed gases and moisture. Its analysis by spectroscopic means showed less than 0.01% Mg and less than 0.1% each of Al, Ca, Fe, and Na. Other impurities were not detected.

Equipment. A high temperature X-ray powder camera[61] of 19 cm. diameter was used. The furance associated with the camera is limited in extended operation to a maximum temperature of about 900°C.[62]

---

[60] U. S. Standard Sieve Sizes.

[61] Purchased (1949), Unicam Instruments (Cambridge) Ltd., Arbury Works, Cambridge, England.

[62] Operation at 1000°C. (recommended as safe by the manufacturers) resulted in repeated furnace failure due to the burning out of the electrical windings.

The materials being studied were contained in SiO_2-glass capillary tubes of about 0.02 cm. outside diameter and were as thin-walled as possible.

The temperature of the material was taken to be that of the average of the values obtained from two Pt-PtRh thermocouples, placed near the capillary (just outside the collimated X-ray beam, one above and one below). A calibration experiment, in which the melting of pure Ag metal powder contained in a typical capillary was observed visually through a microscope, showed that, in this case, only a 5°C. correction to the thermocouple reading needed to be applied. The design of the camera furnace is such that the capillary may radiate energy towards a cold area (in the direction of the film holder) as well as back toward the hot zone. Therefore, materials of differing emissivities will not have the same true temperature for a given thermocouple reading. A reasonable error in the temperature of ±10°C. is estimated.

A constant-voltage regulator made possible a constant power supply to the furnace so that the temperature remained constant to within ±2°C.

It was found to be desirable to machine into the cassette reference notches at intervals of 7.5° Bragg angles. These notches gave shadow marks on the films and made possible calibration so that radius and film-shrinkage errors could be corrected.

A Ni filter 0.001 inch thick was placed before one half of[63] the film and the other half was left unfiltered. The unfiltered half was usually measured as the weak lines were thus sharper. The filtered

[63] This camera has two individual films to record separately the two identical patterns which appear on either side of the X-ray beam. Bragg angles 5° to 85° are recorded on each.

half served as a guide in cases where confusion of Kα with Kβ lines was possible.

The X-ray beam source was a Norelco[64] unit and was operated at 35 kilovolts and 20 milliamperes in all the work. Copper radiation was used.

Preliminary Preparation of Materials. The silica gel and the mixture (Si + SiO_2 in the ratio 1:1) were preheated for 10 minutes in vacuum at about 1400°C. to expel moisture and gases and to provide some opportunity for sintering of the particles. An alumina crucible was used as a container and only the material not in contact with the alumina was selected for use.

This heat treatment was found to be necessary in order to prevent the more dense Si particles (No. 400 screen mesh) from separating from the floccy silica gel and collecting at the bottom of the capillaries when they were being filled. Thorough mixing of the materials before the treatment was accomplished in a small glass ball mill loaded with small steel balls. Microscopic examination of the contents of the loaded capillaries in the case of the mixture showed uniform distribution of the component particles.

Results. The results of the several X-ray studies are tabulated in Table XIII. The fundamental conclusion which may be drawn from this work is that the solid SiO is not stable at 900°C. No lessening of Si concentration was observed and no lines required the existence of a new phase as an explanation. It is not thought that a slow rate is responsible for the apparent lack of reaction in view of the extremely long period of heating (44 hours including exposure time as well as previous equilibration time). Earlier discussions in this paper have shown that considerable reaction with the formation of gaseous SiO

[64] Manufactured by the North American Phillips Co., New York

Table XIII

Tabulation of Results of X-ray Studies

Film No.	Material	Temp.	X-Ray Exposure	Description of Treatment after Having Been Sealed in Capillary	Phases Found	Lattice Dimensions, Experimental, Kx units	Lattice Dimensions, Literature, Kx units	Remarks
3535	Si	9°C	35 hrs.		Si	A_o=5.4200±0.0005	A_o[65]= 5.41982 (25°C)	
3479	(Si+SiO_2)	900°C	36 hrs.	Heated 8 hrs. before exposure was begun	Si	A_o=5.4367±0.0005		The β-tridymite appears to be present in amount greater than the β-cristobalite. The lattice dimensions refer to the hexagonal system for the β-tridymite and the temperature for the values not reported is no doubt approximately 900°C for temp. was higher than the stability region for α and β_2-tridymite.[68]
					β-cristobalite	A_o=7.135±0.0020	A_o[66]=7.1318 (800°C)	
							=7.1348 (1000°C)	
					β-tridymite	A_o=5.044±0.0020	A_o[67]=5.03 (?°C)	
						C_o=8.241±0.0020	C_o=8.22 (?°C)	
3493	SiO_2	900°C	36 hrs.	Heated 8 hrs. before exposure was begun	β-cristobalite	(Same as for Film No. 3479)		The β-tridymite appears to be present in amount less than the β-cristobalite. The lattice dimensions are exactly equal to those obtained from Film No. 3479 within less than experimental error allowed.

Table XIII (Continued)

Film No.	Material	Temp.	X-Ray Exposure	Description of Treatment after Having Been Sealed in Capillary	Phases Found	Lattice Dimensions, Experimental Kx units	Lattice Dimensions, Literature, Kx units	Remarks
3486	$Si+SiO_2$	9°C	35 hrs.	Same capillary as for Film No. 3479, was cooled down at rate of 15°/min.	Si α-cristobalite α-tridymite			Film was not measured but direct comparison with Film No. 3535 showed the Si lattice dimensions to be unaltered.
3465	$Si+SiO_2$	12°C	13 hrs.		Si α-cristobalite α-tridymite			It appears that the cristobalite is relatively less abundant than is Film No. 3486.

Table XIV

Comparison of X-Ray Diffraction Patterns of Si and (Si and $Si+SiO_2$) at 900°C.

Si	$(Si+SiO_2)$		SiO_2			
Calculated	Film No. 3479 Corrected Observed		Film No. 3493 Corrected Observed		β-Tridymite Calculated	β-Cristobalite Calculated
$Sin^2\theta$	$Sin^2\theta$	I*	$Sin^2\theta$	I*	$Sin^2\theta$	$Sin^2\theta$
.9611	.9611	5				
.8610	.8610	7				
.8010	.8009	20				
.7008	.7009	23				
	(.6514)	**	.6512	0.5	.6514	.6515
.6408	.6408	7				
.5407	.5408	17				
.4806	.4806	20				
	.4644	1	.4653	1		.4653
	.4070	5	.4072	5	.4071	.4072
.3805	.3804	15				
	.3719	3	.3722	3	.3722	.3723
.3204	.3204	5				
	.3143	3	.3141	3	.3140	.3141
	.2951	2	.2949	1	.2956	
	.2792	15	.2796	13	.2792	.2792
	.2480	2			.2489	
.2203	.2206	45	.2216	15		.2210
.1602	.1605	47				
	.1394	15	.1402	10	.1394	.1396
	.1321	1			.1328	
	.1280	2	.1288	5		.1280
	.1093	2	.1092	3	.1095	
	.0931	40	.0937	25	.0931	.0931
	.0661	7			.0659	
.0601	.0600	50				
	.0397	20	.0402	5	.0397	
	.0349	100	.0352	75	.0349	.0349
	.0309	30	.0312	10	.0310	

* The intensity, I, for both films are normalized to the strongest line of Film No. 3479, except that the values for Film No. 3493 have been multiplied by a factor of 1/2 since the SiO_2 was about twice as abundant in the capillary for this film.

** Not clearly visible on the Ni-filtered film but sharply noted on the unfiltered half and is recorded because of its relatively large angle.

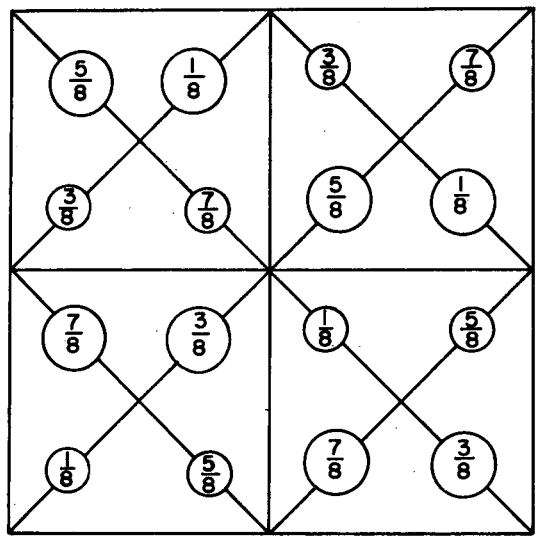

FIG. 1

BASAL PROJECTION OF THE STRUCTURE OF SOLID SiO AS DEDUCED BY INUZUKA.

LARGE CIRCLES = OXYGEN ATOMS

SMALL CIRCLES = SILICON ATOMS

NUMBERS SHOW THE ELEVATION OF ATOMS

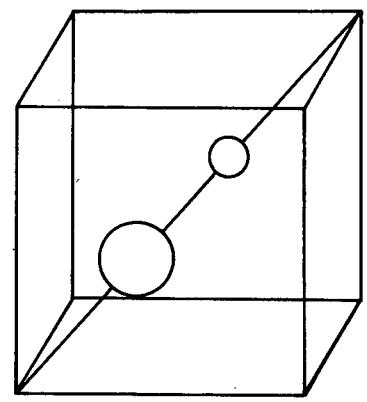

FIG. 2

$\frac{1}{8}$ OF UNIT CELL SHOWING ARRANGEMENT OF ATOMS ALONG THE DIAGONAL OF THE SMALL CUBE OF EDGE $a/2$.

MU2803

takes place under the conditions used, so that a ready reaction path is available. Mobility of the Si atoms was evidenced by growth of crystallite size (spottiness of the Si diffraction lines was observed).

Other interesting results implicit in the tabulation of Table XIII should be noted. Apparently Si acts as a flux in the transformations of SiO_2, for only about 10 minutes of heating of the mixture ($Si+SiO_2$-gel) at about 1400°C. produced both cristobalite and tridymite. Long heating of SiO_2 alone (Film No. 3493) produced both of these forms also, but an equivalent treatment of a mixture ($Si+SiO_2$) produced relatively more of the tridymite form. It must be remarked that the crystallization of the SiO_2-glass capillary should ordinarily take place with the formation of cristobalite[47], so that presence of the lines of this pattern in Film No. 3479 need not be taken to indicate that the SiO_2 of the mixture is present in any form other than tridymite. The apparently greater relative abundance of cristobalite to tridymite in the room temperature Film No. 3486 (the mixture after it had had a very long heating period) compared to the room tempera- Film No. 3465 (the mixture with only 10 minutes heating period) is to be explained on the same basis.

It is of further interest to examine these data for any evidence of solid solution of one phase in the other[69], for extensive solid solubility would alter the results of the preceding thermodynamic calculations, in which the assumption of essentially pure Si and SiO_2 has been made. The lattice dimensions of the SiO_2 are completely unaltered, within the experimental uncertainty, by the presence of Si at 900°C. It is therefore not likely that appreciable solubility of Si in the SiO_2 lattice occurs at this temperature.

[69] Schäfer and Hörnle[13] reported that they were conducting studies to determine the extent of solid solubility in the system $Si-SiO_2$.

The room temperature lattice dimensions of Si in the long-heated mixture (Film No. 3486) were no different than for the pure Si (Film No. 3535). This would ordinarily be considered presumptive evidence against wide solubility of oxygen in the Si lattice, but, of course, increased solubility with temperature might occur. Becker[70] and Hölbling[71] have each measured the average coefficient of expansion, α, in the temperature interval 18°-950°C. by the use of the X-ray method, and both have obtained $\alpha = 3.55 \times 10^{-6}$/cm. The material used by the second experimenter was 99.92% pure Si. The temperatures used in both cases were "brightness" optical pyrometer temperatures and hence the true value of α should be slightly lower than reported. The author has obtained in essentially the same temperature interval (9°-900°C) a value of $\alpha = 3.46 \times 10^{-6}$/cm. for the mixture ($Si+SiO_2$). It is thus believed that the lattice dimensions here obtained for Si in equilibrium with SiO_2 are reasonably interpreted as corresponding to pure Si and that non-solubility of oxygen in the Si lattice is indicated. If solubility had occurred, one would have expected an increase in the lattice dimensions as is the case with solubility of oxygen in Ti[72].

The lattice parameters of Si given were obtained by use of the equivalent of the Bradley and Jay extrapolation, after radius and shrinkage errors were eliminated (see Barrett[73]), used independently

---

[70] K. Becker, Z. Physik 40, 37 (1926).

[71] R. Hölbling, Z. angew. Chem. 40, 655 (1927).

[72] P. Ehrlich, Z. Elektrochem. 45, 362 (1949).

[73] C. S. Barrett, Structure of Metals, (McGraw-Hill), New York and London, 1943) p. 135.

with each of the three radiation wave lengths. The error here affixed the a_o of Si is somewhat over twice the maximum deviation among these three values.

Table XIV compares the corrected observed $\sin^2\theta$ (where θ = Bragg angle) for Film No. 3479 and for Film No. 3493 with values obtained by use of the derived lattice parameters. Only lines which showed on the filtered half of the film are recorded in the table, and these have been adjusted to correspond to mixed K_{α_1,α_2} lines whose wave length was taken at λ = 1.53867 kx. units. However, the measurements were taken from the unfiltered half of the film so that lines corresponding to K_{α_1}, K_{α_2}, and K_β were recorded. The K_α lines were resolved at values of $\sin^2\theta$ greater than 0.4500.

Experimental (B)

Melting Point of the Mixture ($Si+SiO_2$)

Potter[6a] reported that he was unable to liquify his "brown powder" of the composition SiO at 1700°C. If no solid SiO existed at this temperature but instead the mixture of the amorphous SiO_2 and Si solids, one would have expected him to have observed some melting since the melting point of Si is well below this value and the softening point of SiO_2-glass is about 1667°C. It appeared worthwhile to attempt verification of Potter's observation.

Method. A SiO_2-tube of 13 mm. inside diameter and 1 mm. wall thickness was filled with the same mixture ($Si+SiO_2$) as used in the previous X-ray work, except that no preheating had been done. The bottom end of the tube, Fig. 3a, was heated by two oxy-hydrogen torches while a vacuum (mechanical pump) was being drawn on the system. Heating in this fashion allows gradual collapse of the tube from the bottom upwards so that sintering takes place under compression and finally complete constriction of the upper tube is achieved (Fig. 3b). An additional SiO_2-glass rod working handle was fused onto the other end of the cylindrical ampule thus prepared (Fig. 3c). Now, using the arrangement illustrated in Fig. 3d, an attempt was made to draw off the ampule in the middle section where the heat from the two torches was concentrated. In spite of the fact that the center section was the hottest region, the drawing off occurred at the ends (x and y of Fig. 3d).

Discussion. The results seem to indicate that the solid mixture has a melting point higher than either of its components and that

hence a new phase such as the solid SiO may have replaced the mixture. This result, in agreement with Potter's work, supports the similar supposition earlier drawn in this paper in the discussion of the effusion results.

Experimental (C)

Quenching Studies on the Mixture ($Si+SiO_2$)

The material of the previous experiment (Fig. 3d) was rapidly cooled in air and was considered to have thus undergone quenching. After the tube was broken away, the mixture was broken in half and it appeared as a dark grey, non-porous, homogeneous mass. Microscopic observation under good lighting conditions revealed the presence of two phasea and this was confirmed by X-ray diffraction. The form of SiO_2 found in this case was α-quartz and no explanation for this surprising result can be offered. The previous X-ray studies by the author had in no case detected more than a trace of quartz.

A more rapid quench of a similarly prepared ampule of the form of Fig. 3a was conducted by heating as hot as possible by the two torches and until the ampule drew off by its own weight and fell into a beaker of cold water. On breaking apart the ampule (which only suffered a small crack during this treatment) and observing a cross-section of the material under the microscope, one could discern the presence of the usual two phases. No X-ray study of this material was made.

Discussion. This work would indicate that if the solid SiO

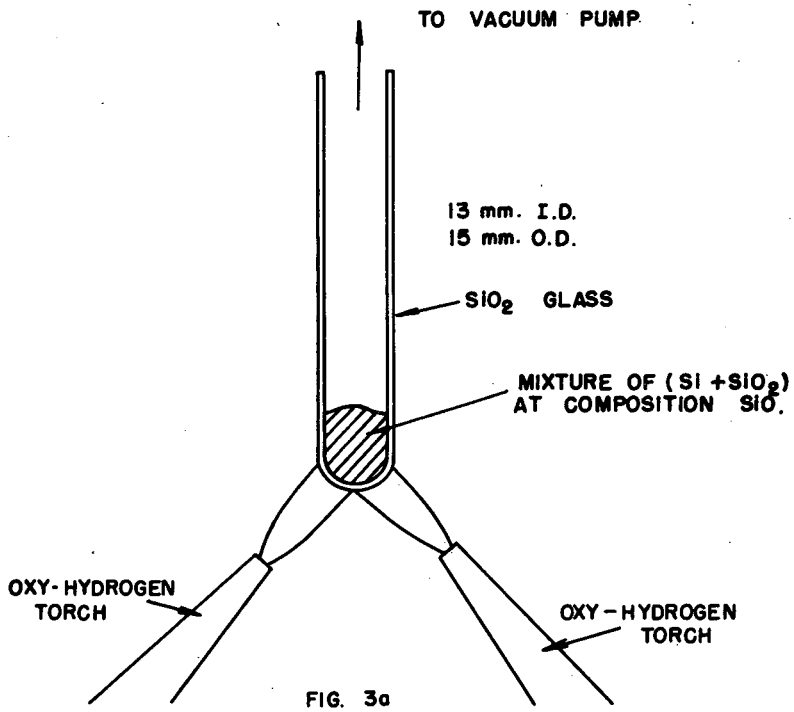

FIG. 3a

EXPERIMENTAL ARRANGEMENT FOR PREPARING A DENSE SINTERED ($Si + SiO_2$) MIXTURE.

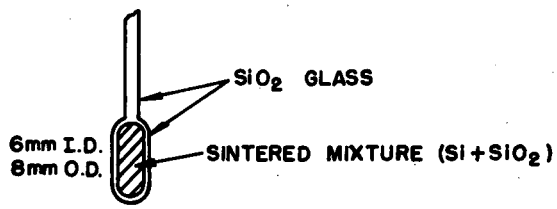

FIG. 3b

SINTERED ($Si + SiO_2$) MIXTURE AFTER COLLAPSING THE TUBE OF FIG. 3a.

MU2804

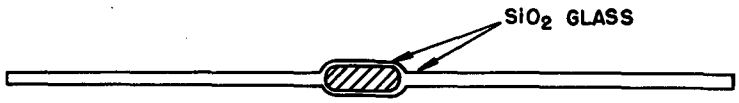

FIG. 3c

SINTERED ($Si + SiO_2$) MIXTURE OF FIG 3b. TO WHICH AN ADDITIONAL SiO_2 GLASS WORKING HANDLE HAS BEEN ATTACHED.

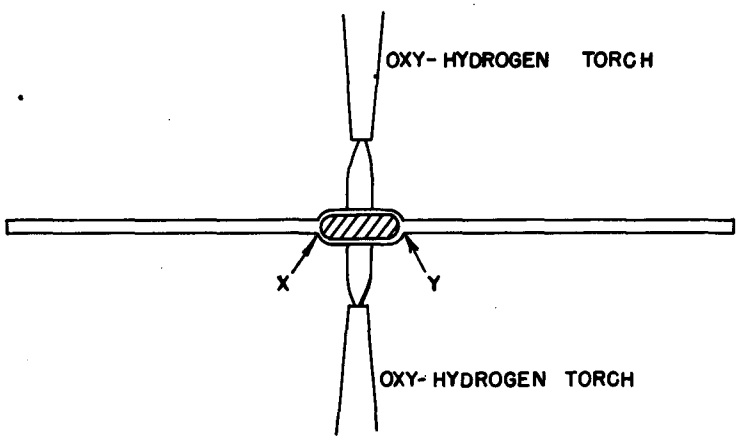

FIG. 3d

EXPERIMENTAL ARRANGEMENT FOR INVESTIGATION OF THE MELTING POINT OF THE MIXTURE ($Si + SiO_2$). TENSION WAS APPLIED BY MEANS OF PULLING ON THE SiO_2 GLASS RODS DURING THE HEATING. THE RODS PULLED OFF AT X AND Y AND THE CENTER SECTION DID NOT DRAW DOWN.

MU2805

phase did exist at the higher temperature as supposed in the preceding experiment, then its rate of disproportionation at temperatures below its stability range must be very rapid indeed.

Experimental (D)

Thermoelectrovalve Effect and the Stable Existence of Solid SiO

Introduction to the Theory of the Experimental Method. The considerable circumstantial evidences of the existence of the solid SiO as a stable phase at temperatures above 900°C. made desirable the carrying out of some conclusive experiment. The predicted temperature of initial stability, 1172°±15°C. lay beyond the maximum operating range of the high temperature X-ray camera of this laboratory, and consequently a new method of studying the possible reaction $1/2\ Si_s + 1/2\ SiO_{2s} = SiO_s$ needed to be devised.

Consideration of the properties of the solid SiO which had been prepared by the quenching of the gaseous SiO ruled out the use of thermal analysis which is ordinarily effective in detecting transformations in such systems, since Von Wartenberg's[20] value of the heat of this reaction leads one to expect no appreciable thermal effect at the transition. The property which seems to be the most strikingly different for solid SiO compared to the mixture ($Si+SiO_2$) is the electrical resistivity. As earlier discussed, the solid SiO was reported to be almost a non-conductor whereas the homogeneous amorphous mixture was found to be a conductor of high resistance. Approximate measurements of the resistivity of the compact sintered mixtures from the above quenching experiments showed them to also

behave as electrical conductors of high resistance.

Thus a simple method, possibly capable of completing in a single experiment the investigation as to the stable occurrence of solid SiO in the entire range of temperature up to the liquidus, suggested itself. If a rod of the sintered mixture were used as an electrical resistance heating element and any reasonably excessive voltage were applied, the rod should rise in temperature only until the transition takes place, for transformation of the mixture to the non-conducting solid SiO would prevent the flow of electrical current and further heating would be prevented. With the current flow cut off, the rod should start to cool, whereupon the reverse chemical reaction should set in, reestablishing the current flow and heating should again take place.

If the transformations were instantaneous one should observe the rod to come to a fixed temperature (that of the transition) and remain there regardless of reasonable variation of the voltage. The fluctuations in current should be of such a high frequency as to make the current appear constant. On the other hand, slow transition would be characterized by a slow oscillation of amperage and temperature of the rod. Over heating of the rod would occur until a certain amount of the transition had taken place, and then undercooling would take place until the reverse reaction could get well under way.

The quenching experiments had indicated that if the anticipated reaction did occur, it was at least quite rapid with respect to the disproportionation direction.

Materials. The Si used in this work was the same as used in the previous work (Experimental (A)) but was of No. 200 mesh screen

size. The SiO_2 used (No. 325 mesh screen size) was high purity α-cristobalite kindly furnished by Dr. K. K. Kelley of the United States Bureau of Mines. This had been prepared by annealing acid leached quartz of purity in excess of 99.9% in a platinum container, and by then powdering the material in a boron carbide crucible.

Thermoelectrovalve Experiment No. 1. A SiO_2-glass tube as shown in Fig. 4 was charged with enough of the ($Si+SiO_2$) mixture of SiO composition so that, on being packed tight by means of the close fitting SiO_2-glass rods (A and B), an 11 mm. section (C) of the mixture was obtained. This center section was then heated as hot as possible by the oxy-hydrogen torch arrangement while at the same time being pressed by means of the two rods. The rods were then removed and a small amount of Si powder was sprinkled in on one end of the sintered mixture and a 1.2 mm. Mo wire was inserted. The tube was then held in a vertical positon and treated in the oxy-hydrogen torch until the Si fused to both the Mo wire and the mixture. The process was repeated for the other end. Several attempts were necessary before a sufficiently sturdy and satisfactory contact was achieved. The arrangement is shown in Fig. 5 with the wires (D and E) and the contacts (F and G).

The tube was then placed on a refractory brick and the Mo wires were connected in series with a 440 volt alternating current source, several variable resistors, a fuse box, and a double pole, double throw switch arrangement for introducing to the circuit either a 0-10 ampere ammeter singly or this ammeter in series with a Weston Model 476 milliammeter of 0-250 milliamperes range. An R.C.A.

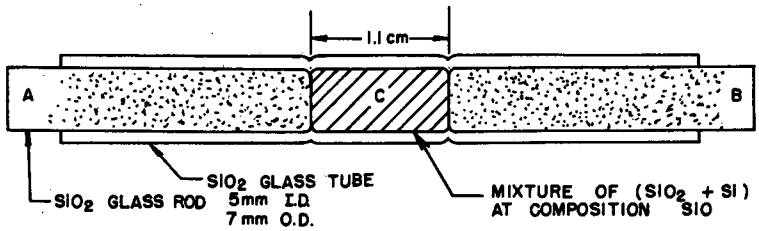

FIG. 4

PREPARATION OF TUBE FOR THERMOELECTROVALVE EXPERIMENT No. I. THE SOLID SiO_2 GLASS RODS, A AND B, WERE USED TO PACK THE MIXTURE, C, DURING THE SINTING TREATMENT.

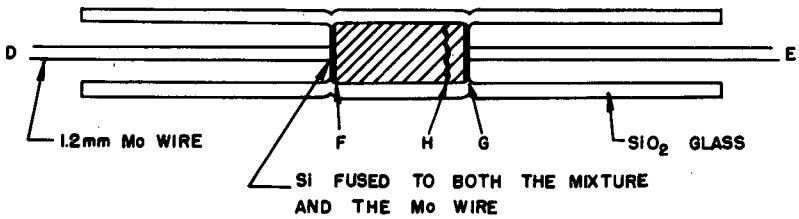

FIG. 5

TUBE OF THERMOELECTROVALVE EXPERIMENT No. I AS IT APPEARED IN OPERATION, THE POSITION OF THE BRIGHT BOUNDARY IS SHOWN AT H.

MU2806

"Volt Ohmyst Junior" electronic voltmeter was connected across the tube Mo wire terminals. The arrangement is essentially the same as that shown later in Fig. 9 except that no fixed-position optical pyrometer had yet been added and the change from Mo wire contacts to W foil contacts had not yet been made.

About 400 volts were applied across the tube and it rapidly heated up to a dull red; then a bright boundary zone (H of Fig. 5) formed and the current began to oscillate between the values 0.150 to 0.075 amperes.

A few simple tests were then applied to see if these results would also be in agreement with the preceding theory. Thus heating the mixture by use of the torch should make the current decrease, and, in fact, this was observed to take place. The current first fell quickly to 0.075 amperes, the lowest value for the usual oscillation. More intensive heating caused the current to slowly decrease further but the current could not thus be extinguished. On removing the torch, the bright boundary was seen to reappear and the oscillation to again set in. On the other hand, if cold air were blown across the tube, the current went up to the high value, 0.150 amperes, and it remained there without detectable oscillation. (The bright boundary, of course, in this did not disappear). When the blowing of cold air across the tube was ceased oscillation again set in.

The voltage across the tube was varied from 420 to 335 volts and the temperature of the hot boundary zone as read with an optical pyrometer did not appear to change noticeably, in agreement with predictions. At voltages lower than about 300 the process was unable to maintain itself and the tube cooled down.

Because this unique effect has never been previously observed, it seems desirable to present a tabulation of the observations made, and this is done in Table XV. It is believed that no extensive quantitative interpretations should be applied to the data (except the temperature) since the maximum and minimum amperages and voltages per oscillation must ordinarily be observed while the instrument needles are in motion. The frequency of oscillation is, of course, dependent on the heat transfer from the tube to the environment as was seen from the fact that oscillation could be stopped by the blowing of cold air across the tube. The "brightness temperatures" are those as recorded with the optical pyrometer and have not been corrected for non-black body conditions. The bright boundary zone being observed appears to be approximately 1-2 mm. thick and extends completely around the tube. Measurement with the pyrometer is fatiguing since a pulsing fluctuation within the boundary zone itself can be seen to be constantly taking place. Temperature measurements in this experiment were not made with as great care as in the following experiments where the pyrometer was then mounted in a fixed position. The data of the table are presented in the order in which they were obtained.

An attempt to see if the bright boundary might be caused to shift in position was made by applying intensive heating towards the end of the mixture more remote from the boundary. This did cause the original boundary to disappear, but when the heating was removed the new bright boundary, where the torch had been applied, shifted by jumps until it was essentially in its original position. The position of all portions of the boundary were not always rigidly the same from moment to moment as small shifts in small nodes along the wavy

Table XV

Descriptive Data for Thermoelectrovalve Experiment No. 1

Voltage Max./oscill	Voltage Min./oscill.	Milliamperage Max. oscill.	Milliamperage Min./oscill.	Frequency of Oscillation No./min.	"Brightness Temperature" °C	Remarks
395	375	150	70	40 44 46	1195 1210	The frequencies were not rigorously observed. Three different observers merely counted them for periods of one minute.
421	419	150	75	96 108 104	1218 1220	It is believed that the true variation in voltage was averaged out by the rapid fluctuation.
410	400	150	75	72 68 70	1220 1219	
400	375			42 42 45 42	1212 1202 1225 1203	
390	358	148	75	28 29	1204	The amperage and voltage remained at the high value longer than at the low value.

Table XV (Continued)

Voltage Max./oscill.	Voltage Min./oscill.	Milliamperage Max. oscill.	Milliamperage Min./oscill	Frequency of Oscillation No./min.	"Brightness Temperature" °C	Remarks
335		150 150	75 135			Did not fluctuate at first. Then the torch was applied and afterwards fluctuation began. However gradual change to the second set of values took place.
300		149			1150 1150	Could not be sure as to whether small oscillations were occurring. Boundary zone appeared wider.
		125	75			Application of limited heating by torch caused oscillation to set in.
340		140 149	75		1200	No oscillation until slight heating was applied. Then went through a period of oscillation and further heating caused oscillation to stop when the milliamperage was 75. On cooling it again went through an oscillation region and again stopped, this time at milliamperage of 149.

bright line (see Fig. 5) frequently took place.

Thermoelectrovalve Experiment No. 2. Some slight suggestion of a trend of the bright boundary temperature to lower values at lower voltages might be gained from the data of the previous experiment. For this reason, a few days after Experiment No. 1 had been completed, it was repeated and the data are listed in Table XVI. The same tube was used and all equipment were the same; however, the pyrometer was mounted in a fixed position for this work. This made it possible to consistently select the same portion of the bright boundary for observation. It also assured that the pyrometer could be kept well focused at all times. This experiment may also indicate that there is a small trend in temperature with variation of the voltage. No explanation can be offered for the discrepancy in temperature between the two experiments.

It is important to note that in this re-use of this tube, it was necessary, even though a full 457 volts was applied across the cold tube, to heat the tube up with a torch before it would begin to conduct current. The same procedure had to be used any time the tube was allowed to become cold, as in reducing the power too low. This is no doubt related to the fact that the conductivities of both Si and SiO_2 increase with temperature and possibly also to the fact that thermal expansion could give better partical to partical contact. Why the first operation of the first tube (cold) in Experiment No. 1 took place without heating then requires explanation.

The tube was later broken open for inspection. A conspicuous ring of crystallization around the interior of the SiO_2-glass containing tube was noted and this corresponded in position and

Table XVI

Descriptive Data for Thermoelectrovalve Experiment No. 2

Voltage Max. oscill.	Voltage Min. oscill.	Milliamperage Max. oscill.	Milliamperage Min. oscill.	"Brightness Temperature" °C Zone 1*	"Brightness Temperature" °C Zone 2*	Remarks
300	295	140	100	1125	1117	The average temperature is 1113°C
				1110	1105	
				1110	1112	
				1108	1115	
457		120	80	1126	1124	The average temperature is 1122°C.
		125	75	1110	1115	The frequency of oscillation was about 120 oscillations per minute.
				1130	1113	
				1123	1127	
				1130	1117	

*The same two different portions of the hot boundary were consistently selected for pyrometer observation.

and width to the former bright boundary zone. This opaque ring was noted before the tube was broken open, but it was then thought to belong to the mixture. A void core down about half the length of the mixture zone was found. It is supposed that the mass had not been as well sintered as previously thought and that gradual transference of material from the central core toward its outer circumference took place. The cross-sectional area of the void was about 1/4 that of the total cross-sectional area. Much of the material in the core area was a rich golden brown when viewed under the microscope. It appeared decidedly homogeneous, but X-ray diffraction showed clearly that Si was present. The other lines in the pattern were not very distinct, but it appeared that some of each of the three room temperature modifications of SiO_2 were probably present.

It is supposed that the principal electrical conduction is ordinarily by means of the partic. to partic. contact of Si grains. Then as the partic. size decreases during the formation of the more homogeneous material increased insulation of the Si particals by the SiO_2 may occur. The conductivities of both Si and SiO_2 increase with temperature so that these barriers are not broken down on heating.

The exterior of the mixture zone appears as a light brown and as such meets the general description of the amorphous mixture that has often been reported in the literature.

<u>Thermoelectrovalve Experiment No. 3.</u> Another tube of larger dimensions was made up to see if the general effects could be duplicated (see Fig. 6). A much simpler method of establishing electrical contact with the mixture was used in this case. A tungsten ribbon

was lapped over the SiO_2-glass rods (I and J of Fig. 6) and thus a considerable area of contact with the Si powder (M and N of Fig. 6) was obtained. It was then very easy to maintain a tight contact as the Si was being fused. The solid rods also fused in place and were so left. Use of the flexible ribbons is a considerable aid with respect to avoiding accidental fracture of the contact during further manipulation. Change in the use of Mo to W as contact leads was only incidental and was due to the immediate availability of the foil form of the latter.

Application of 440 volts across this tube did not result in its spontaneous heating. However, when a torch was applied to the mixture section current slowly increased and then rapidly surged to some value beyond 1 ampere (blew the 1 ampere fuse). This operation was repeated several times until finally the current became controlled and several hot spots (see O of Fig. 6) appeared. Gradually, then, the hot spots faded out as at the same time the expected sharp boundary zone formed (see P of Fig. 7) and current oscillation began. The bright boundary did not extend completely around the tube in this case and one could estimate that perhaps it was active over a cross-section area of about half that of the tube cross-section.

Later inspection of this tube after it was broken apart showed also a considerable void central core. The portion of the tube which had not shown the bright boundary was not at all well sintered and was even somewhat powdery and is believed to have played no role in the process.

The pulsation of brightness within the bright boundary was again apparent.

The descriptive data appear in Table XVII.

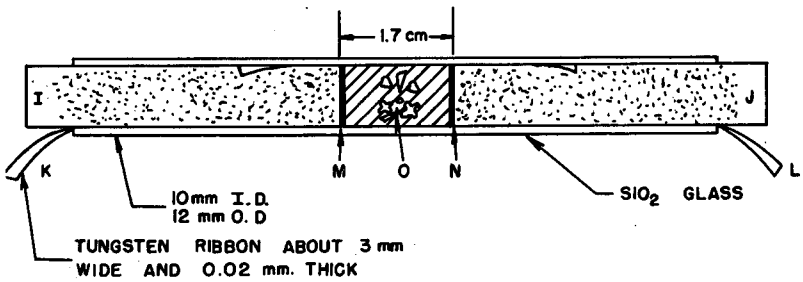

FIG. 6

INITIAL APPEARANCE OF OPERATING TUBE OF THERMOELECTROVALVE EXPERIMENT No. 3. EXCESSIVE AMPERAGE WAS BEING CONDUCTED AND ONLY HOT SPOTS, O, INSTEAD OF A BOUNDARY, WERE OBSERVED. THE TUNGSTEN-SI-MIXTURE CONTACTS ARE INDICATED AT M AND N.

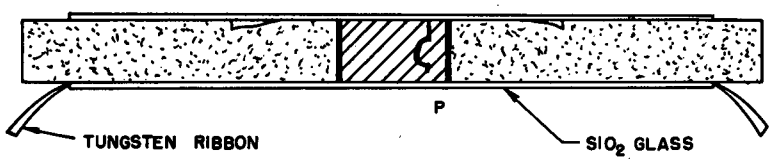

FIG. 7

APPEARANCE OF SAME TUBE AS IN FIG. 6 AFTER BRIGHT BOUNDARY HAD FORMED AND CURRENT HAD FALLEN TO LOW VALUE. THE BOUNDARY, P, DID NOT EXTEND ALL THE TUBE.

MU2807

Table XVII

Descriptive Data for Thermoelectrovalve Experiment No. 3.

Voltage max./oscill.	Voltage min./oscill.	Milliamperage max./oscill.	Milliamperage min./oscill	Brightness Temperature *Zone 1	Brightness Temperature *Zone 2	Frequency of oscillation No. min.	Remarks
440		100	85	1130	1157	c.a. 80	Average brightness temperature = 1152°C. Voltage oscillation not detectable
				1145	1175		
340	320	110	100	1160	1149	c.a. 72	Average brightness temperature = 1163°C.
				1160	1160		
				1167	1167		
				1160	1167		
				1167	1165		
				1166	1165	73	
441	439	100	80	1172	1155	c.a. 85	Average brightness temperature = 1148°C.
				1166	1150		
				1137	1148		
				1145	1145		
				1130	1137		
				1135	1150		
329	307	115	96	1150	1165	c.a. 51**	Average brightness temperature = 1154°C.
				1140	1145		
				1148	1157		
				1165	1149		
				1150	1150		
				1167	1159		

*The same two different portions of the hot boundary were consistently selected for pyrometer observation.

**The laboratory windows and doors had been closed to avoid drafts and thus the room temperature increased considerably so that heat transfer from the tube was lessened and the oscillation frequency decreased.

Thermoelectrovalve Experiment No. 4. A new tube was made up, this time of the smaller dimension so that better sintering could be achieved. A quite uniform tube with a very slight constriction in the center section of the mixture zone resulted.

When about 385 volts were applied across the tube considerable arcing in the region of the W-Si-(Si+SiO_2) contact took place. This was allowed to continue and after about 15 seconds a bright boundary formed right at the Si-(Si+SiO_2) contact boundary (see w of Fig. 8). After about 10 minutes this bright boundary had slowly shifted until it had moved about 3 mm. toward the center section (see x of Fig. 8). The current was then shut off for a time. Reapplication of voltage across the tube again did not result in spontaneous heating up, and the torch was applied to the center section. The boundary then formed at the center section, but for a short time a partial second boundary existed again at x of Fig. 8. This tube was not broken apart as it was desirable to save it for laboratory demonstration purposes. The descriptive data of the experiment are listed in Table XVIII. The different rows of data were collected on different days.

Thermoelectrovalve Experiment No. 5. It was of interest to see if the formation of longitudinal voids in the mixture zone of the tubes played any fundamental role in this unusual process. To see if the void might be eliminated by use of a more dense mixture a new tube was made up by a different technique.

In order to get as concentrated heating as possible in preparing this fused mixture a small (3.5 mm. I.D. and 4.5 mm. O.D.) tube was used. This was closed off at one end and was filled with the usual mixture to a height of about 3 cm. and the open end was connected to

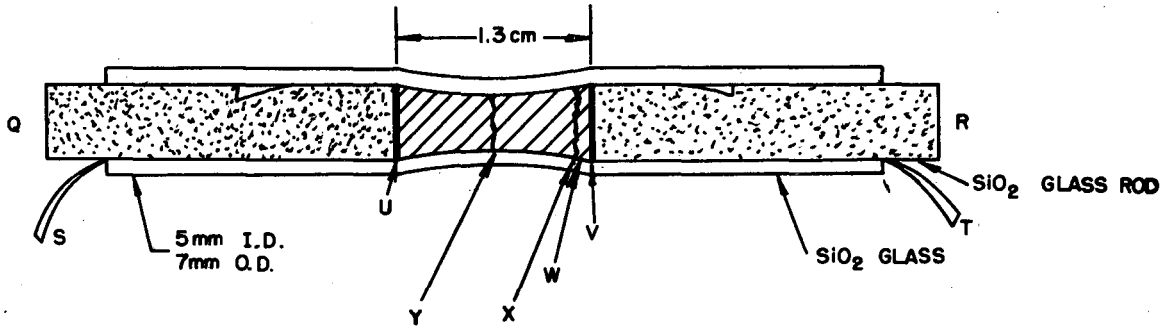

FIG. 8

APPEARANCE OF TUBE OF THERMOELECTROVALVE No. 4 AT THREE DIFFERENT STAGES OF OPERATION. THE TUNGSTEN-Si-MIXTURE CONTACTS ARE AT U AND V. THE INITIAL BRIGHT BOUNDARY FORMED SPONTANEOUSLY AT W AND SLOWLY PROGRESSED TO X AND AT THAT TIME THE VOLTAGE WAS CUT OFF. ON REAPLICATION OF VOLTAGE, NO CURRENT FLOW OCCURED UNTIL EXTERNAL HEAT WAS APPLIED AND THE THEN APPEARED AT Y.

MU2808

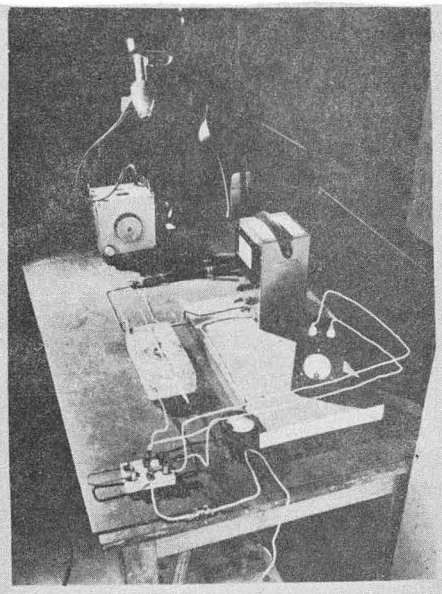

FIG. 9a

PHOTOGRAPH OF A THERMOELECTRIC EXPERIMENT DURING OPERATION. OSCILLATION IN CURRENT IS APPARENT FROM INSPECTION OF THE BLURRED APPEARANCE OF THE MILLIAMETER NEEDLE (MILLIAMETER IS AT LEFT OF PHOTOGRAPH)

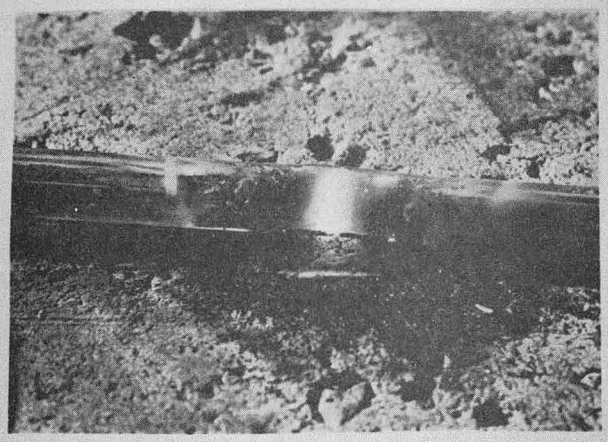

FIG. 9b

PHOTOGRAPH OF THE TUBE (OF FIG. 9a) WHILE IN OPERATION. (SEE TEXT FOR EXPLANATION OF THE EXCESSIVE APPARENT WIDTH OF THE BRIGHT BOUNDRY)

ZN169

Table XVIII

Descriptive Data for Thermoelectrovalve Experiment No. 4.

Voltage Max. oscill.	Voltage Min. oscill.	Milliamperage Max. oscill.	Milliamperage Min. oscill.	Frequency of Oscillations No. oscill./min.	"Brightness Temperature" °C	Remarks
485					1137	Other data was not recorded
					1115	
c.a. 440					1125	Other data was not recorded
					1125	
c.a. 460					1145	Other data was not recorded
c.a. 460		135	65	c.a. 100	1155	No detectable variation in voltage
					1155	
					1125	
					1130	
					1130	
					1175	
					1137	

a mechanical vacuum pump. The tube was heated from the bottom end and then gradually higher until the SiO_2-glass collapsed in tightly around the mixture. Then the tube was heated as hot as possible in the twin oxy-hydrogen flames. The pyrometer "brightness temperature" was in excess of 1725°C. After the tube had cooled, a section was broken off and the ends examined under the microscope. The material was seen to be very well sintered and without pores. Its diameter was now 2.5 mm. and the section is shown in Fig. 10. This was now placed in a large SiO_2-glass tube and the walls of the latter were collapsed down around the section and fused to it. Then the usual contacts were affixed (see Fig. 11).

When 350 volts were applied across the tube as usual, spontaneous heating occurred. Very uniform heating took place and the mixture reached a temperature of 1050°C. at 350 volts and almost 2 amperes. Since the system was electrically fused at 2 amperes it was necessary to turn off the power and insert a larger fuse. Then 440 volts were applied and considerable arcing took place for a few seconds and then the amperage suddenly fell to 0.060 and the usual bright ring formed at approximately the mid-point of the mixture section. The "brightness temperature" was found to be 1150°C. The tube was broken open after it had been in operation for only a few minutes, in order to inspect for voids. Only a small pin-hole void was found. It is felt that this was probably due to the short arcing period and it is believed that the voids play no fundamental role in the thermo-electrovalve effect.

It is suggested that further experimentation should employ the general techniques of this last experiment.

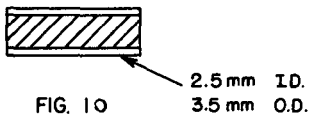

FIG. 10

A SECTION BROKEN FROM A TUBE OF THE MIXTURE ($Si + SiO_2$) SINTERED WHILE UNDER VACUUM AND USE IN PREPARING TUBE OF FIG. 11

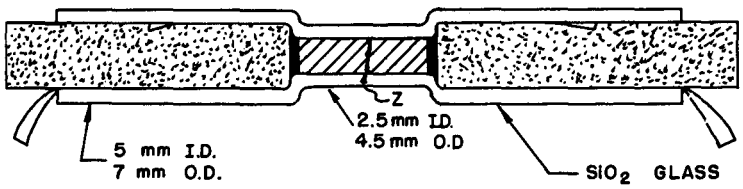

FIG. 11

APPEARANCE OF TUBE OF THERMOELECTROVALVE EXPERIMENT No. 5 WHILE IN OPERATION. THE WALLS OF THE LARGE EXTERNAL TUBE HAD BEEN FUSED TO THE SMALL SECTION SHOWN IN FIG. 11 THE BRIGHT BOUNDARY, Z, FORMED SPONTANEOUSLY ON APPLICATION OF VOLTAGE ACROSS THE TUBE.

MU2809

Correction of "Brightness Temperatures" to True Temperatures. It became important to know the true temperature of the bright boundary in connection with a possible alternate explanation of the phenomenon which will be later discussed.

As has been mentioned earlier, the external surfaces of all of the mixtures in the tubes took on a light brown appearance. Furthermore, the surface is not of a glassy or reflecting type and is probably to be considered rough. Now when one melts Si in an evacuated SiO_2-glass tube, one might expect the Si-SiO_2 interface to form the same type of surface, and this is indeed the case.

Therefore it was a simple matter to obtain the correction for the "brightness temperature". An evacuated SiO_2-glass tube containing about 10 grams of Si powder was heated up above the melting point of Si, and then allowed to cool so that the surface might be observed. It is best to have the tube in a horizontal position while cooling so that the expansion of the Si on solidification will not break the tube. The temperature arrest on solidification is of sufficient duration to permit easy "brightness temperature" readings. Six solidifications were performed and the average of the six observations was 1362°C. with a maximum deviation of 13°C.

The true melting point of Si is given as 1410°C. in the tabulations of Brewer[55a]. The common formula for correction from "brightness temperature" to true temperature is

$$1/T - 1/S = \lambda/c \ln (E \cdot t)$$

Here, T is the true temperature and S the "brightness temperature" on the absolute scale, λ is the wave length of the maximum transmission

of the pyrometer, c is a constant, E is the emissivity of the body observed, and t is the transmission coefficient of the interposed glass windows. Since the Si and the ($Si+SiO_2$) have identical surfaces and since the interposed glass windows are essentially the same, both materials will obey the expression

$$1/T - 1/S = K$$

The constant, K, can be determined from the observations at the melting point of the pure Si, and was found to be -1.74×10^{-5}/deg.

The average "brightness temperature" of the bright zone from consideration of all work is 1152°C. The average for all values except the first experiment is 1142°C. These yield true temperatures of 1188°C. and 1178°C. respectively.

Discussion of the Results of the Thermoelectrovalve Experiments. The agreement of these values with the value 1172±15°C. previously predicted in this paper is impressive and is here considered confirmatory as to the stable existence of SiO solid at this temperature. It is also, then, the temperature of the equilibrium transition,

$$1/2\ Si_s + 1/2\ SiO_{2s} = SiO_s\ .$$

It is appropriate at this time to mention that a discontinuity in the form of rate law for the oxidation of Si is apparent at 1160°C. compared to lower temperatures in the data of Brodsky and Cubicciotti[74]. The appearance of the solid SiO at the surface of the oxidizing Si is suggested as a logical explanation.

The predictions of the theory of the thermoelectrovalve effect are in fundamental agreement with experimental observations. Furthermore, the theory appears to be unique. The only alternate explanation

[74] M. B. Brodsky and D. Cubicciotti, Tech. Rpt. No. 8, Aug., 1950, ONR Contract N 7-onr-329 T.O. II.

of the phenomenon which the author had been able to suggest supposed that the phenomenon might involve the melting of Si at the bright boundary. Thus, conduction of current, mainly by Si from partical to partical in the mixture ($Si+SiO_2$) might be expected to sharply fall off at the melting point of the Si because of the considerable contraction of the latter on melting[75,76] which could greatly decrease the number of partical to partical Si contacts. It was for the purpose of deciding this point that the temperature correction to the "brightness temperature" was determined, and it is seen that this second explanation is ruled out.

Some strain is placed on the adopted theory by the fact that considerable heating of the mixture section of the tube by torch while the voltage was being applied did not reduce the current flow greatly below the minumum value which was being observed during oscillation. It seems necessary to suppose that the conductivity of the solid SiO is appreciable at these temperatures.

The formation of the bright boundary is, of course, easy to explain. With the formation of the first few nuclei of solid SiO, greater electrical resistance in this cross-sectional zone is encountered and hence greater heating and continued catastrophic formation of solid SiO resulting in the formation of the boundary. In a tube of nearly uniform cross-sectional area the initial boundary might be formed anywhere but one would expect it to move progressively until it reached the minimum cross-sectional area. This was observed

[75] The author has verified the work of v. Wartenberg by a similar method. Si was melted in a SiO_2-glass tube; on cooling, a conical excresence from the main mass appeared. Rough volume measurements showed an expansion on solidification of 16±5% for several measurements.

[76] H. v. Wartenberg, Naturwissenschaften, 36, 373 (1949).

to take place in Experiment No. 4.

Clearly, the phenomenon of the thermoelectrovalve effect deserves further study and this is contemplated by the author. It offers the possibility of a rapid exploration to determine the possible hight temperature stable existence of intermediate compounds in metal-metal salt systems where the intermediate compound may be expected to be essentially of high electrical resistance compared to the mixture. Precise determination of the temperature of the transition, if any, might then be made by supplementary measurement of the conductivity with respect to temperature in the indicated temperature region for which the thermoelectrovalve effect had been noted.

Possible practical utilization of this effect in high temperature thermostated furnaces, using heating elements made up of appropriate mixtures, would seem to be greatly limited by the fact that a hot boundary is formed rather than a uniformly heated rod.

Appendix 1

Thermal Conductivity of the New Refractories, CeS, UC, and UN by a Relative Method.

The new refractories UC, UN, and particularly CeS have metallic appearances and it was desirable to know if they might possess high thermal conductivities.

The apparatus shown in Fig. 1 and Fig. 2 was designed to be specifically suited to measurements on the particular specimens which were on hand in the form of short rods of about 1 cm. length and about 1.2 cm. diameter. The specimen to be measured is placed between a reference rod of the same diameter, and a lead rod of the same diameter, and has between it and the reference rod a thin disk of lead. The other ends of the reference rod and the lead rod protrude into circulating water chambers. A rubber gasket fits tightly around these ends in the water and when the whole assembly is clamped tightly together a water-tight seal is formed and in addition a good thermal contact is obtained at the lead disk and at the specimen to lead juncture.

Thermocouples are then fitted into close-fitting holes along the reference rod and along the specimen. The distance between the holes is measured. Warm water from the thermostated reservoir is pumped passed the end of the other. During a series of measurements the apparatus was kept completely surrounded by about a six inch layer of insulating sawdust which was held in a box which could be fitted around the apparatus.

From the knowledge of the temperature along the rods and the distance between the points of temperature measurement one may obtain the temperature gradient. One assumes that the same heat, q, passes through both rods with essentially no loss so that the conductivity of the test material relative to that of the standard rod is easily determined. The validity of the results is considerably enhanced by having as a standard a material of approximately the same conductivity as that of the test material so that heat loss characteristic along the tube will be more nearly the same. This effect is further minimized if half of the measurements are made with the heat flow in one direction and half with it in the other direction, and this practice was followed in the present measurements.

In preliminary comparisons of standard materials, excellent results were obtained for Fe compared to Pb. However, it is to be noted that in these cases longer rods were used than were available in the test materials. Comparison of the widely different standard materials Cu vs. Pb gave results in error by a factor of 10.

Thermal Conductivity of CeS.

CeS vs. Pb yields $K_{CeS} = 0.039$ cal. sec.$^{-1}$ cm.$^{-1}$ deg. C.$^{-1}$

CeS vs. Bi yields $K_{CeS} = 0.019$ cal. sec.$^{-1}$ cm.$^{-1}$ deg. C.$^{-1}$

The second values which is identical with the value for Bi is adopted and an uncertainty of a factor of 2 is assumed hereafter.

Thermal Conductivity of UC.

UC vs. Bi yields $K_{UC} = 0.20$ cal. sec.$^{-1}$ cm.$^{-1}$ deg. C.$^{-1}$

Thermal Conductivity of UN.

U vs. Bi yields $K_{UN} = 0.011$ cal. sec.$^{-1}$ cm.$^{-1}$ deg. C.$^{-1}$

These values may be considered to apply to room temperature. The cold water temperature was approximately 18°C. and the warm water temperature was approximately 31°C.

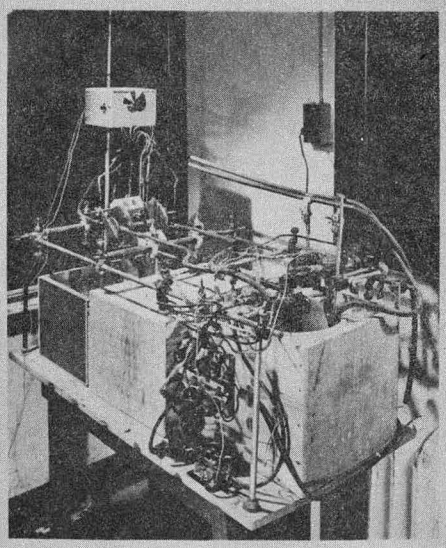

FIG. 1

PHOTOGRAPH OF THERMAL CONDUCTIVITY APPARATUS

THE EQUIPMENT AT THE RIGHT IS ESSENTIALLY A THERMOSTATICALLY CONTROLLED WATER RESEROIR AND A PUMP FOR CIRCULATING THE WATER THROUGH ONE CIRCUIT OF THE CONDUCTIVITY APPARATUS AT THE LEFT (SHOWN IN GREATER DETAIL IN FIG. 2) THE CONSTANT-FLOW CIRCUIT SOURCE IS NOT SHOWN. THE POTENTIOMETER FOR READING THERMOCOUPLE VOLTAGE IS IN THE LOWER LEFT CORNER.

ZN168

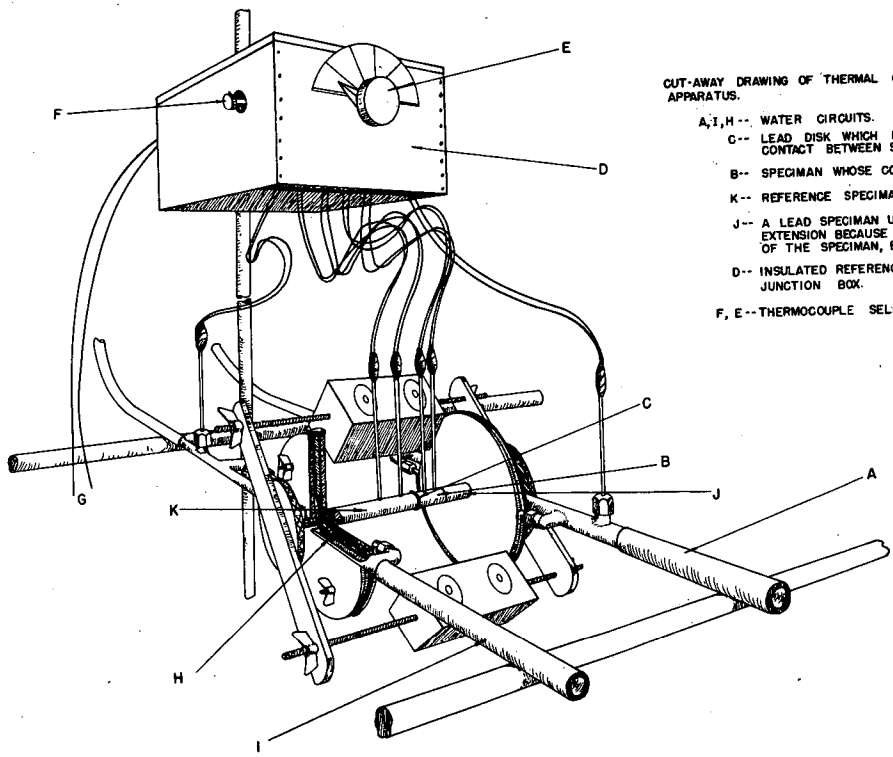

CUT-AWAY DRAWING OF THERMAL CONDUCTIVITY APPARATUS.

A, I, H -- WATER CIRCUITS.

C -- LEAD DISK WHICH PROVIDES THERMAL CONTACT BETWEEN SPECIMANS.

B -- SPECIMAN WHOSE CONDUCTIVITY IS DESIRED.

K -- REFERENCE SPECIMAN ROD.

J -- A LEAD SPECIMAN USED MERELY AS AN EXTENSION BECAUSE OF THE SHORT LENGTH OF THE SPECIMAN, B.

D -- INSULATED REFERENCE THERMOCOUPLE JUNCTION BOX.

F, E -- THERMOCOUPLE SELECTOR SWITCHS.

FIG. 2 (APPENDIX)

MU2802