UCRL-16413

University of California

Ernest O. Lawrence Radiation Laboratory

PROCEDURES AND RESULTS OF THE
JANUARY 1964 HEAVY ISOTOPES PRODUCTION CAVE RUN

TWO-WEEK LOAN COPY

This is a Library Circulating Copy which may be borrowed for two weeks. For a personal retention copy, call Tech. Info. Division, Ext. 5545

Berkeley, California

DISCLAIMER

This document was prepared as an account of work sponsored by the United States Government. While this document is believed to contain correct information, neither the United States Government nor any agency thereof, nor the Regents of the University of California, nor any of their employees, makes any warranty, express or implied, or assumes any legal responsibility for the accuracy, completeness, or usefulness of any information, apparatus, product, or process disclosed, or represents that its use would not infringe privately owned rights. Reference herein to any specific commercial product, process, or service by its trade name, trademark, manufacturer, or otherwise, does not necessarily constitute or imply its endorsement, recommendation, or favoring by the United States Government or any agency thereof, or the Regents of the University of California. The views and opinions of authors expressed herein do not necessarily state or reflect those of the United States Government or any agency thereof or the Regents of the University of California.

Limited interest only

UCRL-16413

UNIVERSITY OF CALIFORNIA

Lawrence Radiation Laboratory
Berkeley, California

AEC Contract No. 7405-eng-48

PROCEDURES AND RESULTS OF THE JANUARY 1964 HEAVY ISOTOPES PRODUCTION CAVE RUN

J. L. Green, J. T. Haley and B. B. Cunningham

SEP 1965

I. INTRODUCTION

During the period from January 14 to July 15, processing and analytical work was carried out on the most recent phase of the UCRL (Berkeley) heavy isotope production program. The work was done in the water cave facilities which are operated under the direction of P. W. Howe and J. T. Haley. The processing chemistry was carried out under the direction of Dr. B. B. Cunningham and J. L. Green.

II. SLUG DESCRIPTION AND IRRADIATION SCHEDULE

The slugs consisted of an outer aluminum jacket 5/8 inch O.D. and 4 inches long. An internal plug containing 2.5 gm AmO_2 mixed with Al powder was pressed into an internal cavity 3/8 inch in diameter and 3-1/4 inches long. Two identical slugs, UCRL 29-1 and 29-2 were then placed in the L-45-center position in the Materials Testing Reactor and irradiated for approximately 5 years to an integrated flux of 6×10^{22}.

The average composition of each slug at the end of irradiation is shown in Table I.

Table I. Slug Composition.

Actinides		Fission Products (mg)			
Pu;	few mg	Zr;	550	Y;	115
Am^{241};	ca. 30 mg	Mo;	305	Rh;	93
Cm^{244};	215 mg	Ru;	230	Nd;	70
Bk^{249};	6-7 μg	Ce;	170	Pm;	60
Cf^{252};	33μgm	Te;	155		
Es^{253};	200 rg	Sr;	125		

The actinide compositions are actual while the fission product compositions are computed.

The results of mass analyses run on the Cm and Cf fractions are shown in Tables II and III, respectively.

Table II. Cm Mass Analysis (Cm VI-609).

$\frac{245}{244}$	=	0.01259 ± 0.00027
$\frac{246}{244}$	=	0.1571 ± 0.0017
$\frac{247}{244}$	=	0.00443 ± 0.00013
$\frac{248}{244}$	=	0.00525 ± 0.002

242 & 243 - interference from other elements.

Table III. Cf Mass Analysis (CfVI-605).

248/252	≤ 0.0017
249/252	$\leq 0.0231 \pm 0.003$
250/252	$= 0.193_6 \pm 0.002_5$
251/252	$= 0.0560 \pm 0.0008$
253/252	$\leq 0.0025_8 \pm 0.0001$
254/252	≤ 0.0001

Bk^{249}, Cm^{248} and Es^{253} all present

III. PROCESSING

A graphic description of the chemistry involved is included in the form of a simplified flow sheet. The general features of the flow sheet should be self-evident; however, a short discussion of the difficulties encountered and a brief rational of some of the major blocks of the process are in order.

A. Dissolution

Due to the large amounts of Al present in the slugs (~50 gm each), it was decided to dissolve the total slug in NaOH - $NaNO_3$ solution. This technique would presumably have two major virtues; 1) the elimination of Al in the form of soluble aluminates and 2) the minimization of H_2 evolution which would have other constituted an explosion hazard.

The dissolution was begun using this approach; however, it shortly became apparent that the cores were not readily soluble in the basic medium. It was, therefore, necessary to alter the initial flow sheet to accomodate the HCl dissolution of the cores. Because of the large amount of Al in these biscuits, it was necessary to go through subsequent hydroxide precipitations. In order to remove residual Al and the large amounts of KCl generated in the neutralizations, it was further necessary to carry out extensive washing procedures. These deviations from the initial procedure introduced considerable unexpected and admittedly undesirable extra handling of the activity. It is also possible that the acid-base conversions may be undesirable from the standpoint of Bk recovery due to the possible loss of material as polymeric species either as colloids or by sorbtion on glass vessels. It should be noted that berkelium, unlike curium and the transberkelium actinides is readily oxidized to the +4 state in alkaline solution.

One further point of importance, in this area, is the solid residue from dissolution. It has been noted, both in this run and in the past, that

a jet black solid material of unknown composition appeared as an insoluble residue after dissolution. This material was isolated and washed thoroughly and submitted for spectrographic analysis. The material was found to consist of Pd, Ru, Mo, and Al in the ratios 1 to 1 to 0.2 to 0.2 respectively. The Pd and Ru are presumably pure fission products present either as oxides or as metals (reduced by Al during dissolution). The Mo occurs as a fission product and also as inactive molybdenum compounds used as die lubricants during the preparation of the capsules.

B. Lithium Chloride Columns

A standard procedure used for the separation of the fission products and the bulk of the Cm from the transcurium elements is elution from Dowex-1 anion exchange resin using 10 M LiCl.

It has been noted repeatedly in the past and in the first two LiCl columns in this run, that the speed of elution of the various activities was much more rapid than expected and that banding of the activities, as evidenced by the formation of the characteristic glows of the rare earths and of Cm, occured very late in the elution. This was noted particularly in the case of the second LiCl column which broke through very rapidly and yielded very poor separations. The reason for this was discovered to be the fact that the standard 12 mm × 14 cm columns used for the separation were very badly overloaded (~50-90%). This condition readily explains the pecularities noted above. The fact that separations have even been achieved under these conditions speaks very highly of the efficiency of this separation.

Initially, there was some concern regarding the possible oxidation of Bk on the columns; therefore, the eluent solution was made 0.05 M in $NH_3OH \cdot HCl$. It is now felt that such additions are unnecessary. Crude tracer studies using Ce indicated that in soln's saturated in H_2O_2 or Cl_2, the observed K_D's were

appropriate to Ce^{+3}. It was feared that the presence of the ion exchange resin might shift the oxidation potential far enough to cause difficulty; however, as mentioned above, this does not appear to be the case. In acid solution, of course, H_2O_2 stabilize Bk^{+3} and presumably the H_2O_2 produced by the radiolysis of H_2O would act in this capacity in the column, assuming that the effective oxidation potentials are not greatly affected by the resin.

A white insoluble material appeared during feed preparations which on spectrographic analysis proved to be predominately Al. This material was separated out, washed and retained for further analysis. It has been suggested that this phase is a corrundum like material resulting from the effects of intense radiation on Al in solution.

C. Butyrate Columns

The intra-actinide separations were, as usual, carried out by elution from ammonium from Dowex-50 × 12 using 0.175 M α-hydroxyisobutyric acid at pH = 4.9. This particular step caused a great deal of confusion, particularly with respect to Bk recovery. The Es-Cf separation was not expecially good, but it was adequate, and the Cf-Cm separation was quite good; however, when the so-called Bk fraction was analyzed, it was found to contain only 10-15% of the anticipated yield. After a very extensive analytical program, it was shown that the remainder of the Bk was in the Cf peak and was temporarily lost on a Cf target prepared for accelerator bombardment. The cause of this difficulty is still not particularly obvious to the authors; although, it is known that "But" columns behave rather badly if the feed solutions are not very clean or if a significant amount of the resin is converted to the hydrogen form during loading. At any rate, it was at this point that it was realized that the Bk chemistry had gone disastrously astray.

D. Berkelium Recovery

The principal difficulty involved in processing Bk under these conditions, is that it is very difficult to make rapid radioassays. Bk^{249} is a very soft β emitter (115 keV) with a half-life of 290 days. It is virtually impossible to β count the material because of the tremendous number of β emitters present as potential contaminants. Bk^{249} does emit an α-particle (5.48 MeV) but the branching ratio is so small (2×10^{-5}) that it is very difficult to separate the Bk α's from α-emitting contaminants unless the sample is quite pure. The technique developed for use involved extensive $\beta\gamma$ decontamination using LiCl columns and α decontamination using the extraction of Bk^{+4} into HDEHP from an oxidizing medium. The Bk purified in this manner was then α counted for an appropriate length of time to determine the growth rate of Cf^{249} α's into the sample. This information allows the calculation of the amount of Bk^{249} on the plate. This method is relatively fool-proof; although very extensive α decontamination is necessary to make the growth figures statistically significant.

This technique had not been developed at the time of the first "But" column; therefore, there was, at that time, no information whatever regarding the amount of Bk in the feed to that column. Nothing had been thrown away during previous processing except glassware, which had been carefully rinsed before it was discarded; therefore, it was possible to evaluate potential losses.

Each and every residue generated during processing was analyzed for Bk before disposal with the exception of ion exchange resin used after the Zr pickup column, glassware, and a few solid residues associated with the target preparations which, except for the glass, are probably not significant since a material balance can be made across their point of origin. The results of these analyses are presented both on the flow sheet and in Table IV. A

brief description of the analytical technique is shown in Fig. II. The significance of these results will be discussed later. Suffice it to say, at this point, that virtually all of the Bk which reached the initial LiCl column feed (the earliest available analytical point) was eventually recovered or accounted for.

E. Material Balance

Due to the large amount of analytical work carried out, it is possible to make overall material balances with considerable confidence. In order to report yields in terms of mass, it is necessary to choose a set of half-lives for the materials of interest. The data used for the calculation of this run are shown in Table V. These half-lives are the presently accepted values excepted in the case of Cf^{252}. The most recent value for the Cf^{252} half-life is 2.46 ± 0.004 yr and the fission to α ratio is 31.3 ± 0.2. To remain consistent through the run, 2.55 yrs was used in this work; although, decay corrections were made using the more accurate value.

Major errors are

1. Accuracy of the volume measurement on the sampled solution.
2. Dilution and micropipetting accuracy.
3. Counting statistics.

The magnitudes of the first two errors are not known to any accuracy. The limits shown in Table VI are 62% confidence counting limits except in the cases noted. Probably, a reasonable limit for overall accuracy should be set at 5%; although, the internal consistence of the numbers is better than this would indicate.

The case of the Bk assays, however, differs in that, in some cases, considerable chemistry was necessary in preparing satisfactory growth plates. These results, therefore, contain an additional uncertainty involving chemical

Table IV. Bk Assay Summary

	Bk on 1/14 (μgm)	Assay Result (μgm)	Date
Supers	0.20	0.16	4/7
KB 3*	7.5	7.0	3/12
Cinders	0	0	4/27
KB 21*	2.36	1.62	6/14
KB 25*	0.86	0.60	6/4
White Salts	0.04	0.03	6/8
KB 50*	10.7	10.1	3/12
Rare Earths	0.05	0.04	4/13
Zr	0	0	6/3
Amon. Resin	0	0	4/28
Assay 82	10.7	10.1	3/12
Assay 86	14.4 ± 1	13.0	3/26
Cone 32	1.45	1.36	3/12
CmI	0	0	3/23
Latimer Law	0.13	0.10	4/13
Combined Bk	10.1 ± 2%	8.05	4/16
CmII	0	0	3/23
Cf Tail Gatti	0	0	4/10

*KB (Kitty bucket) - relatively large analytical samples taken from LiCl column feed solutions.

Table V. Half-Lives Used for Calculations

		$T_{1/2}$	c/min/μgm(50%)
Cm^{244}	α	18 yr	9.1×10^7
Cf^{252}	α	2.55 yr*	6.2×10^8
	f	80 yr	3.95×10^7
Bk^{249}	β	290 d	
Cf^{249}	α	360 yrs	4.4×10^6
Es^{253}	α	20 d	2.9×10^{10}

*2.64 yr used for decay corrections.

yield. The only portion of the procedure in which the yield has been checked is the extraction-scrub-strip cycle. Preliminary work using a Ce tracer indicated a yield of ~85% when six scrub strips were used. Losses this high are not consistent with K_D information available; therefore, the losses are probably mechanical. Mechanical losses in batch extractions are typically variable and difficult to reproduce; therefore, this figure should probably not be regarded as firm.

In the case of Cm^{244}, the results indicate excellent internal consistency, very low losses and a total output of 429 mg Cm^{244}. A yield of 405 mg of Es^{253} was realized and no losses are apparent although the first analysis was fairly late in the process.

The Cf^{252} results are self-consistent to within counting statistics. In addition to this, all residues were neutron counted prior to elimination; therefore, it is possible to state that Cf^{252} losses up to the first target

Table VI. Material Balance Summary

	Cm^{244} (mg)	Bk^{249} (μgm)	Cf^{252} (μgm)	Es^{253} (ng)
LiClI Feed	210±2	7.5	32.3±0.5[c]	-
LiClII Feed	221±2	3.3	33.7±0.5[c]	-
LiClIII Feed	429±4	10.7	71.8±4	-
ButI Feed	4	14.4 (10.7)[a]	-	455
ButI Out	-	1.5	67	405
Other	-	8.6[b]	-	-
Total Out	429±4	10.5±0.2	66±0.7	405

- = unassayed

[a]Assay 86 = 14.4 It would appear that the result of assay 86 (14.4 μgm) was too high. 10.7 checks other points in the material balance.
Assay 82 = 10.7 See Bk summary.

[b]By difference

[c]By f/α by PHA + Total α on Low Geo. counter.

Note: limits listed are 62% confidence counting limits with the exception of Total Bk Out in which case the limit is overall confidence.

preparation were no more than 2-3 μgm, i.e., less than 3-4%. The total output of Cf^{252} up to the first target preparation was 66 μgm.

In the case of Bk^{249}, the internal consistency of the analyses through the process is surprisingly good. Since all residues were assayed, with the exception of glassware, it is possible to sum inputs and outputs over the entire process. The information is shown in Table VII.

Table VII. Bk Material Balance

Analysis	Input	Output
Hydroxide Sup'n	0.2	0.2
KB 3	7.5	
KB 21	2.4	
KB 25	0.9	
Salts and Rare Earths		0.1
Latimer Law		0.1
Combined Bk		10.1
	11.0	10.5

It is known that the output number is good to within only a few percent; therefore, this may be regarded as a minimum input figure. Because of the chemical yield problem, however, the sum of the inputs may be low by as much as ~15%. This leads to the conclusion that the input to the LiCl column based on the analytical results was between 10.3 μgm and 12.5 μgm and that the output was 10.3 μgm Bk^{249}.

IV. DISCUSSION OF RESULTS

The results involving Cm, Cf, and Es appear straightforward and require no further discussion. The implications of Bk yields; however, deserve additional attention. Considerable confusion exists regarding the Bk-Cf ratio that should be expected from irradiations of the type involved here. This information is essential for the estimation of the chemical yield through a process and for the evaluation of difficulties involved in specific areas of a flow sheet. Data is locally available for several previous runs which allow somewhat more practical estimates than have been available in the past. In order to compare Bk/Cf ratios between runs it is desirable to present the data in terms of an index which is independent of a choice of a set of half-lives. Such an index is the ratio of the total growth rate of Cf^{249} in the Bk in alpha counts per minute per day to the total fission count rate in the Cf^{252} in fission counts per minute. This comparison is presented in Table VIII.

The first three entries are in reasonable agreement and indicate a growth/fission ratio of $6\text{-}7 \times 10^{-5}$. These data appear to be more or less independent of starting material and irradiation time; therefore, it will be assumed that they indicate the actual Bk content of the undissolved slugs. This being the case, one is forced to conclude that losses of ~15% occured on slug 29-1 and almost 50% on slug 29-2. From the analytical data available for this run, it appears certain that such losses must have occured prior to the first LiCl columns since material balances beyond this point are internally consistent to a maximum of 10-15%. Due to the fact that all head end residues with the exception of glassware were analyzed, it is necessary to conclude that either the loss involved the glassware or that one of the analyses failed. A positive choice between these alternatives is not possible at present.

Since there is no particular reason to doubt the assays, it is suggested that the head end procedure be altered. It is known that in basic solution Ce

Table VIII. Bk^{249}-Cf^{252} Ratio Estimation from Previous Runs

Date	Run	Starting Material	Irradiation Time	nvt	Growth-Fission
3/64	Livermore 3/64	-	-	-	6.7×10^{-5}
5/59	Berkeley 5/59*	$70mgCm^{244}$, $110mgPu^{242}$	14 mo	1.4×10^{21}	6.4×10^{-5}
/58	Berkeley /58*	$192mgPu^{242}$, $85mgCm^{244}$ $48mgAm^{243}$	~3 yr	$\sim 10^{22}$	7.5×10^{-5}
1/64	This run-overall		5 yr	6×10^{22}	3.9×10^{-5}
	Slug 29-1	$2.5gmAm^{241}$			5.2×10^{-5}
	Slug 29-2	$2.5gmAm^{241}$			2.7×10^{-5}

*Several non-identical slugs processed.

and, therefore, Bk are easily oxidized to the +4 ion. The +4 hydroxides are highly susceptible to the formation of polymeric colloids, particularly under near neutral conditions. Many successful hydroxide carries were performed during later processing; therefore, it would appear that a direct hydroxide strike efficiently carries Bk. During the actual dissolution, however, the hydroxides are precipitated only around the slug and the supernatants are never efficiently "swept". It is also possible that the hydroxide concentration immediately adjacent to the dissolving slug could be considerably depressed. All things considered, it appears that peptization at this point followed by sorbtion on the many glass vessels which the supernatant contacted would explain all of the observations. This being the case, it is highly recommended that, in the future, the dissolution be carried out in acid and be followed by direct hydroxide strikes to remove aluminum.

In future processing involving slugs similar to those discussed here, it is recommended that the flow sheet shown in Fig. III be used.

It is further strongly suggested that core samples of the original slug be carefully analyzed and that Bk assays be run concurrent to the main processing stream.

FIG. I Simplified Flow Sheet 1/64 Cave Run

1. —— Bk^{249} assay
2. Spec. analyses normalized to major constituent equal one
3. Other assays as indicated

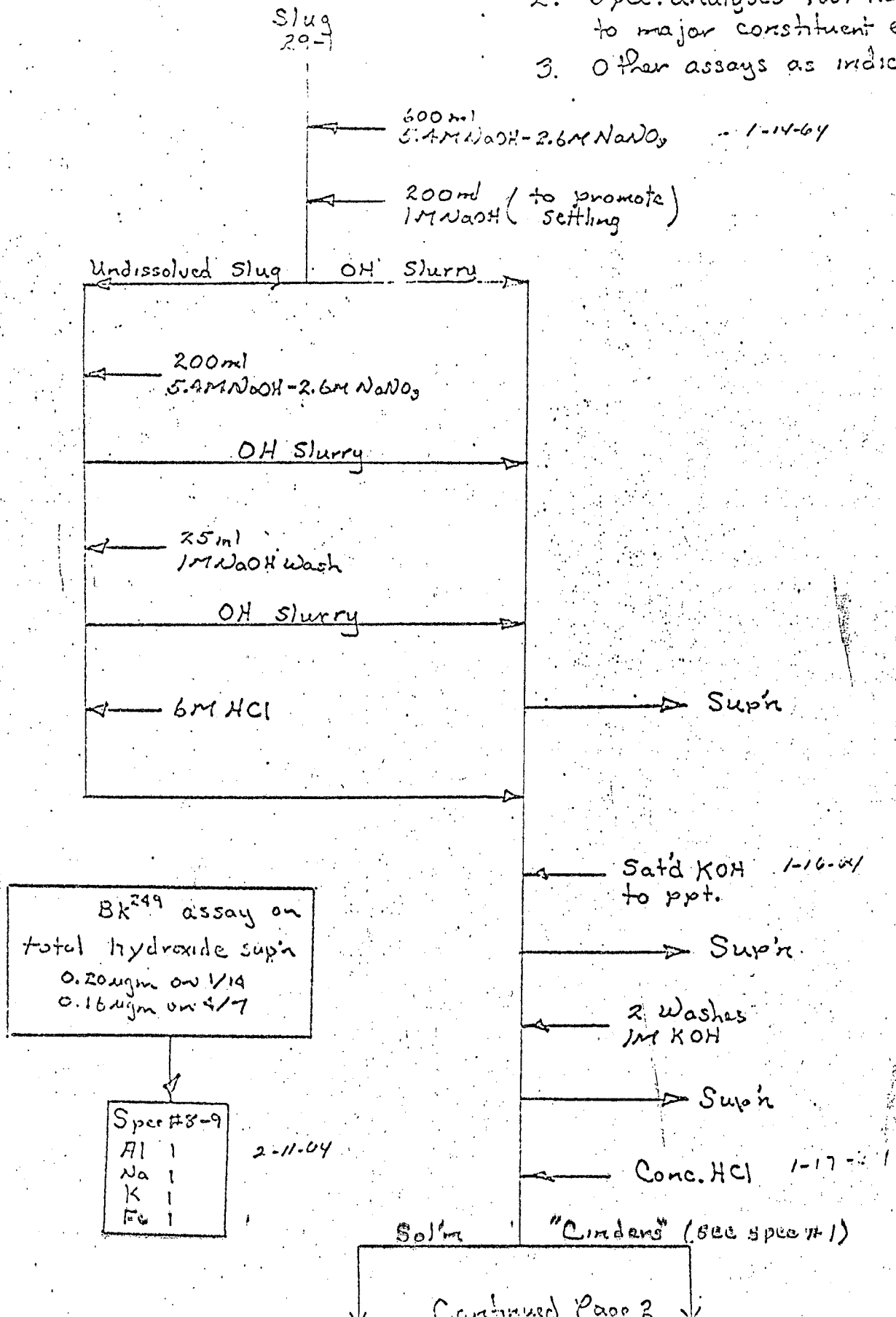

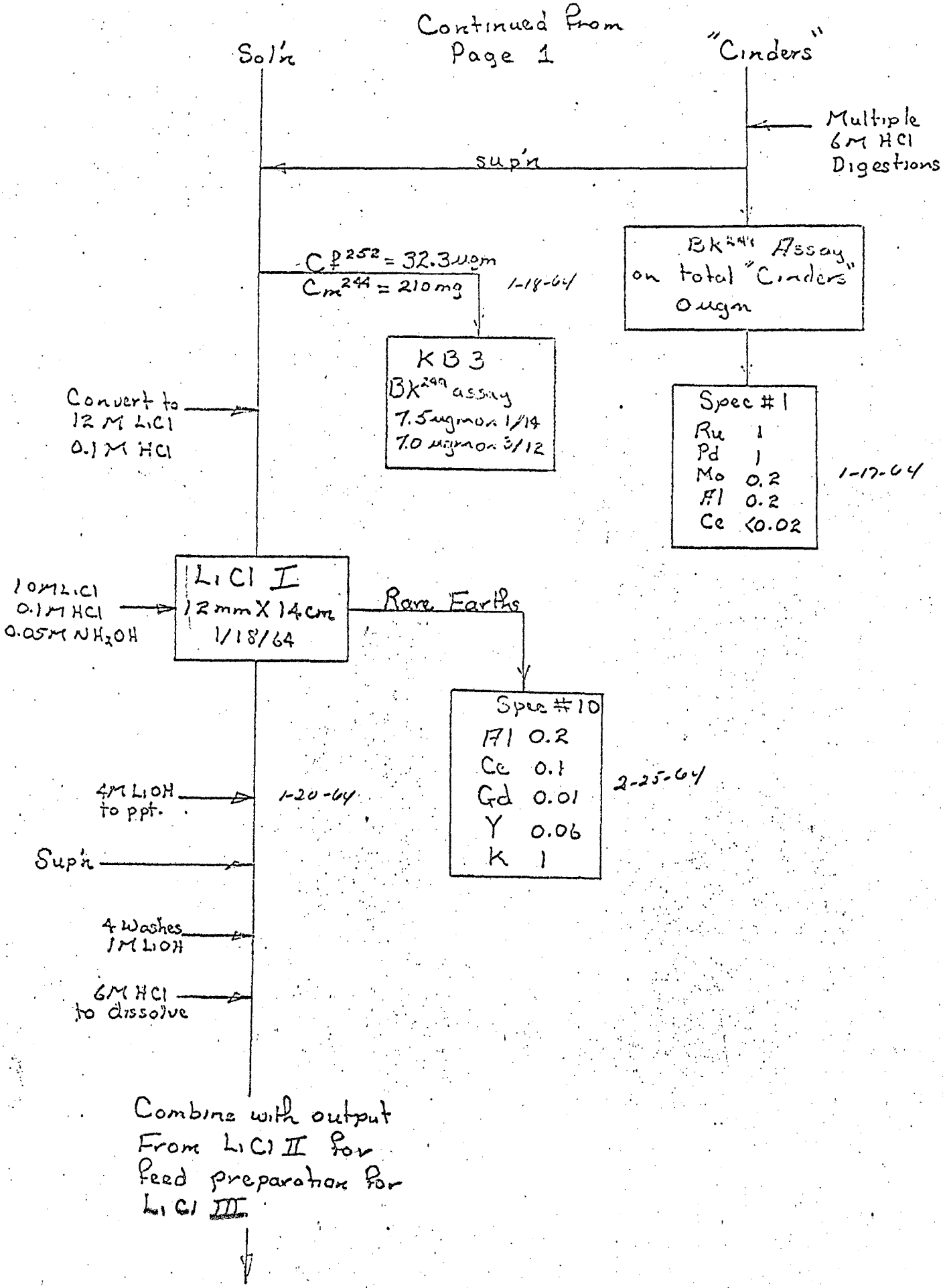
Continued From Page 1
Sol'n
"Cinders"
Multiple 6M HCl Digestions
sup'n
Cf252 = 32.3 μgm
Cm244 = 210 mg
1-18-64
Bk249 Assay on total "Cinders" 0 μgm
KB3
Bk249 assay
7.5 μgm on 1/14
7.0 μgm on 3/12
Spec #1
Ru 1
Pd 1
Mo 0.2
Al 0.2
Ce <0.02
1-17-64
Convert to 12 M LiCl 0.1 M HCl
10 M LiCl 0.1 M HCl 0.05 M NH2OH
LiCl I
12 mm X 14 cm
1/18/64
Rare Earths
Spec #10
Al 0.2
Ce 0.1
Gd 0.01
Y 0.06
K 1
2-25-64
4M LiOH to ppt.
1-20-64
Sup'n
4 Washes 1M LiOH
6M HCl to dissolve
Combine with output From LiCl II for feed preparation for LiCl III

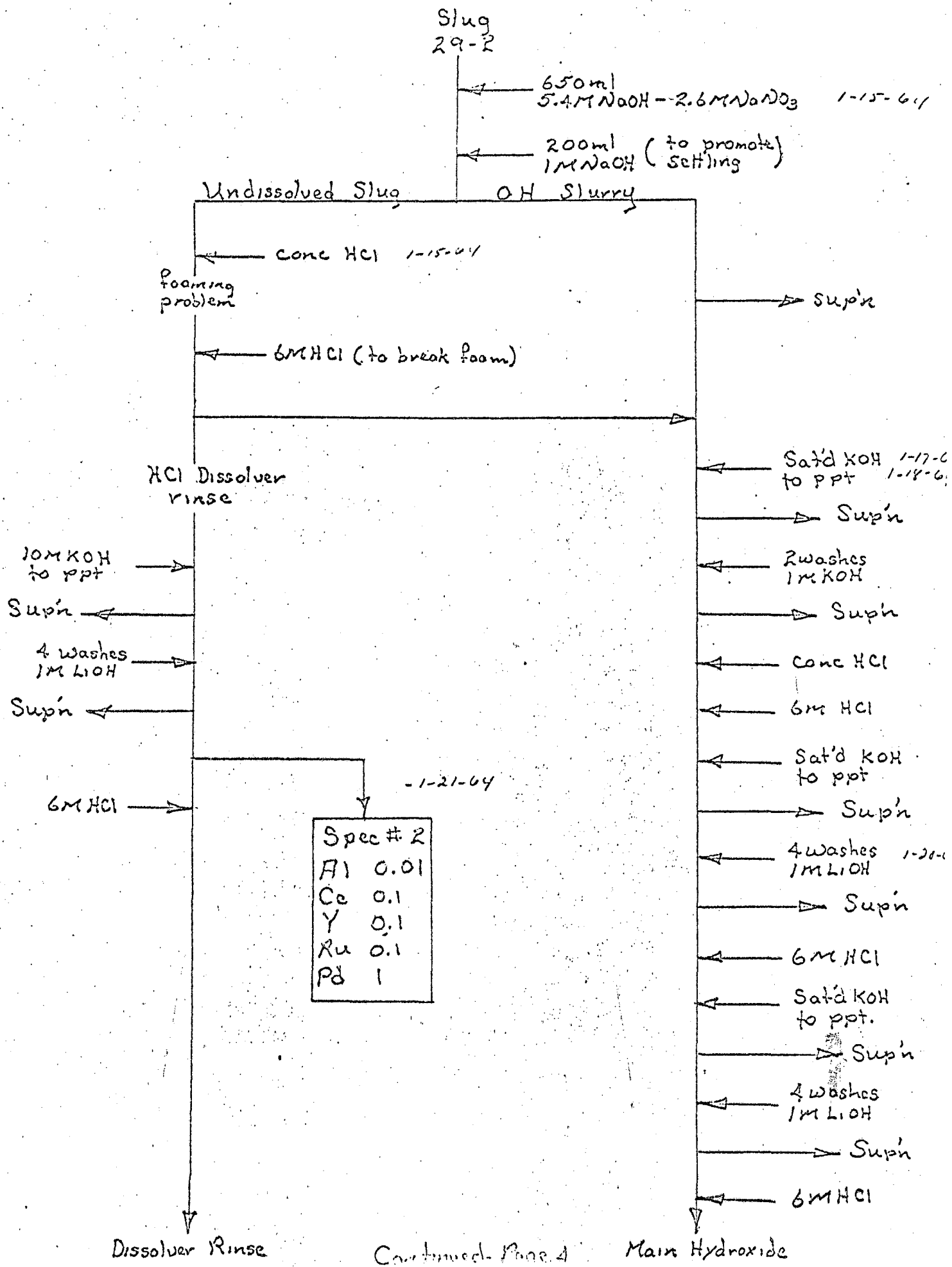

Continued - Page 4

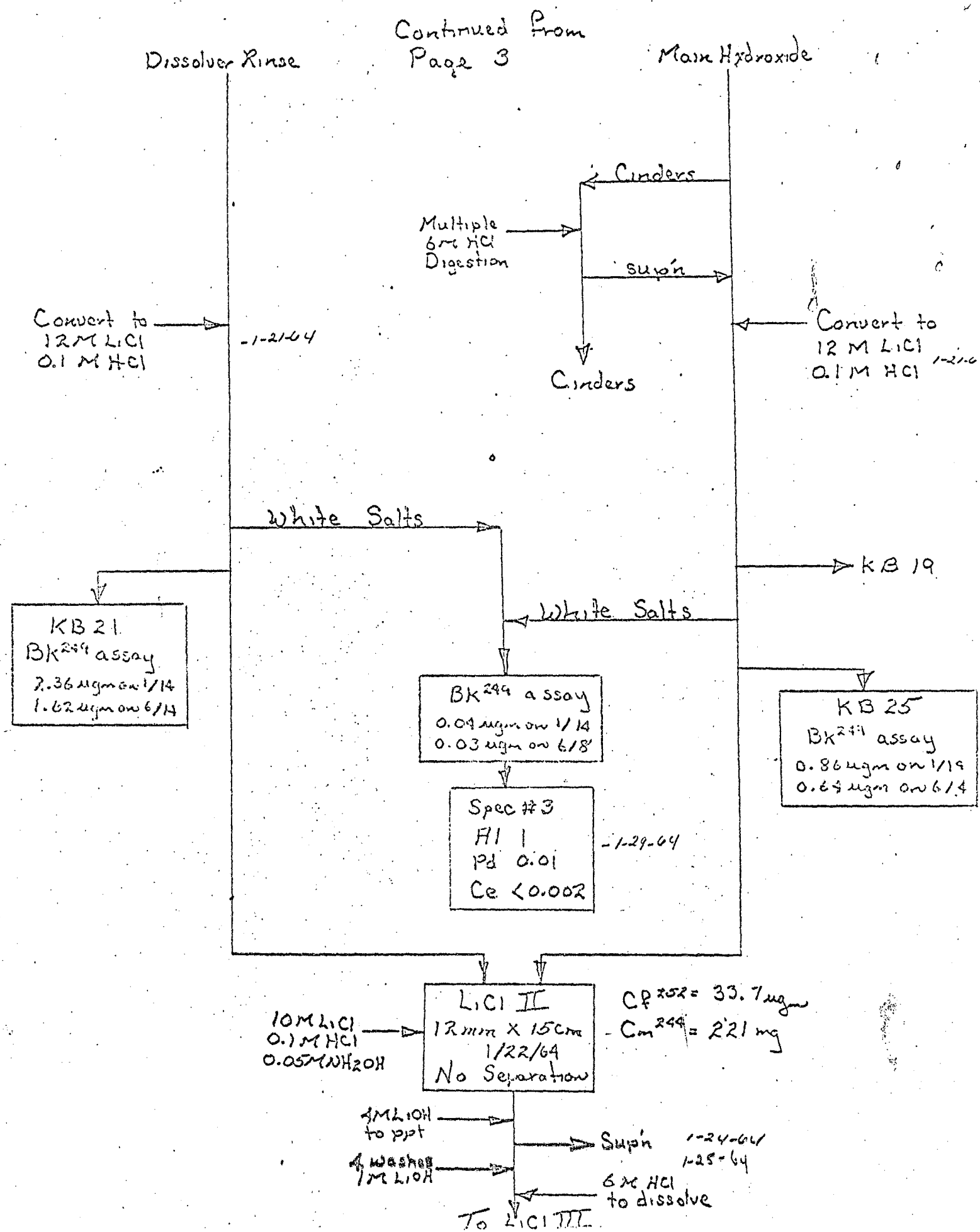
Continued from Page 3
Dissolver Rinse
Main Hydroxide
Cinders
Multiple 6M HCl Digestion
sup'n
Convert to 12M LiCl 0.1 M HCl
-1-21-64
Cinders
Convert to 12 M LiCl 0.1 M HCl
1-21-6
White Salts
KB 19
KB 21
Bk249 assay
2.36 ugm on 1/14
1.62 ugm on 6/14
White Salts
Bk249 assay
0.04 ugm on 1/14
0.03 ugm on 6/18
KB 25
Bk249 assay
0.86 ugm on 1/14
0.64 ugm on 6/14
Spec #3
Al 1
Pd 0.01
Ce <0.002
-1-29-64
LiCl II
12 min X 15 cm
1/22/64
No Separation
10M LiCl
0.1M HCl
0.05M NH2OH
Cf252 = 33.7 ugm
Cm244 = 2.21 mg
4M LiOH to ppt
Sup'n
1-24-64
1-25-64
4 washes 1M LiOH
6M HCl to dissolve
To LiCl III

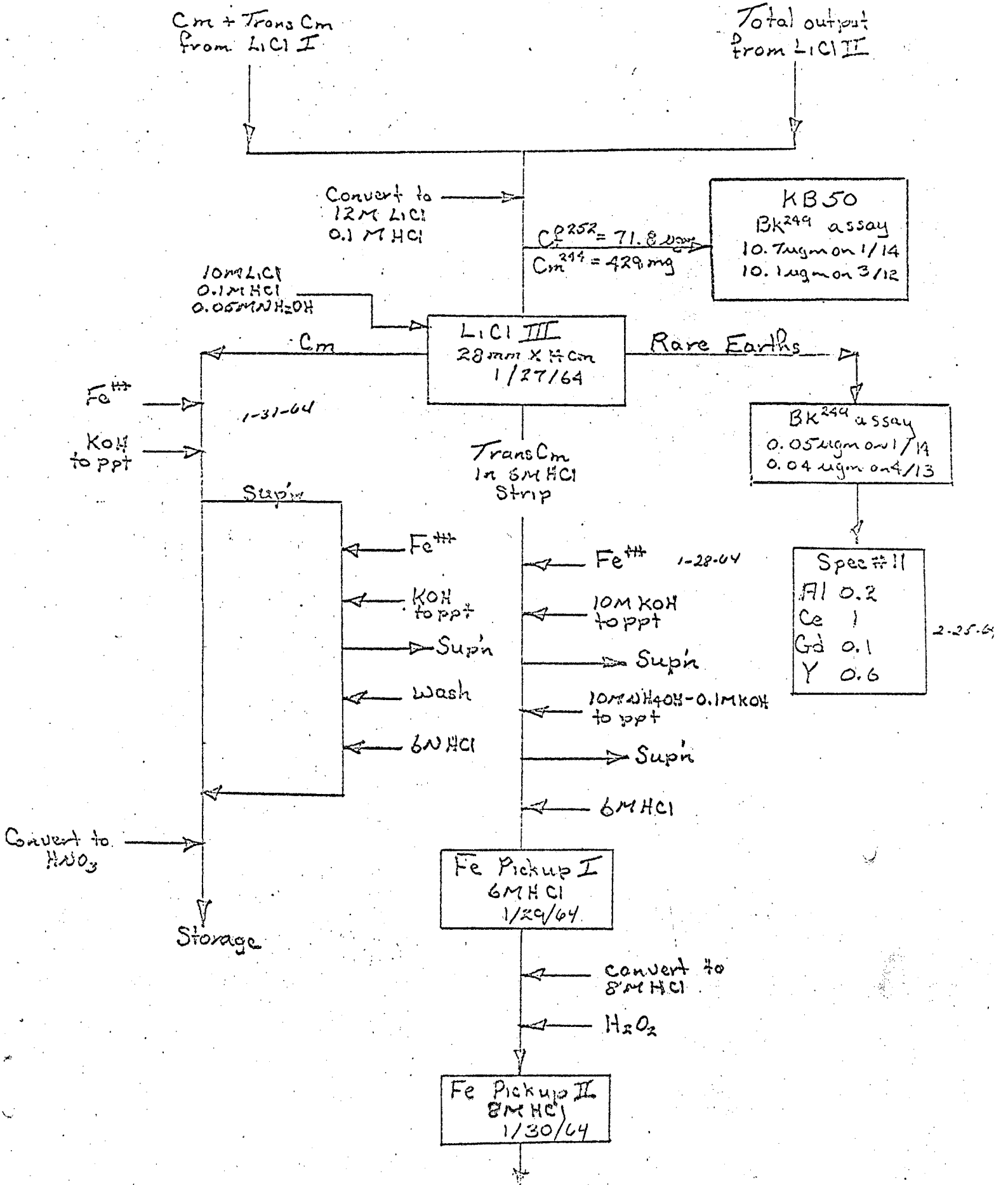
Cm + Trans Cm from LiCl I
Total output from LiCl II
Convert to 12M LiCl 0.1 M HCl
KB50
Bk249 assay
10.7 ugm on 1/14
10.1 ugm on 3/12
Cf252 = 71.8 mg
Cm244 = 429 mg
10M LiCl
0.1M HCl
0.05M NH2OH
LiCl III
28 mm X 4 cm
1/27/64
Cm
Rare Earths
Fe+++
1-31-64
KOH to ppt
Bk249 assay
0.05 ugm on 1/14
0.04 ugm on 4/13
Trans Cm in 6M HCl Strip
Sup'n
Fe+++
KOH to ppt
Sup'n
wash
6N HCl
Fe+++ 1-28-64
10M KOH to ppt
Sup'n
10M NH4OH-0.1M KOH to ppt
Sup'n
6M HCl
Spec #11
Al 0.2
Ce 1
Gd 0.1
Y 0.6
2-25-64
Convert to HNO3
Storage
Fe Pickup I
6M HCl
1/29/64
convert to 8M HCl
H2O2
Fe Pickup II
8M HCl
1/30/64

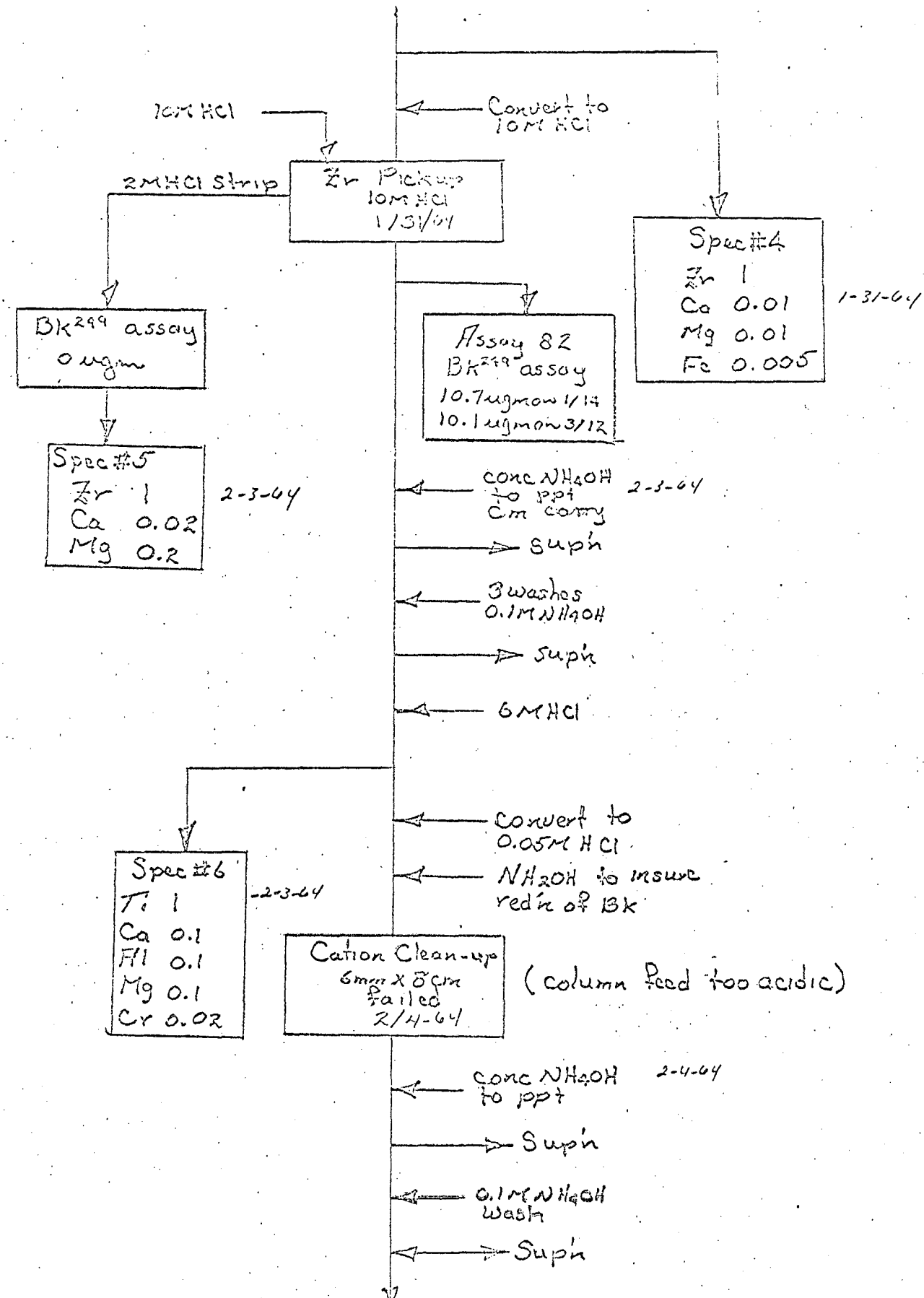
10M HCl
Convert to 10M HCl
2M HCl Strip
Zr Pickup 10M HCl 1/31/64
Spec #4
Zr 1
Ca 0.01
Mg 0.01
Fe 0.005
1-31-64
Bk249 assay 0 ugm
Assay 82 Bk249 assay 10.7ugm on 1/14 10.1ugm on 3/12
Spec #5
Zr 1
Ca 0.02
Mg 0.2
2-3-64
conc NH4OH to ppt Cm carry
2-3-64
Sup'n
3 washes 0.1M NH4OH
Sup'n
6M HCl
Convert to 0.05M HCl
NH2OH to insure red'n of Bk
Spec #6
Ti 1
Ca 0.1
Al 0.1
Mg 0.1
Cr 0.02
2-3-64
Cation Clean-up 6mm x 8cm Failed 2/4-64
(column feed too acidic)
conc NH4OH to ppt
2-4-64
Sup'n
0.1M NH4OH Wash
Sup'n

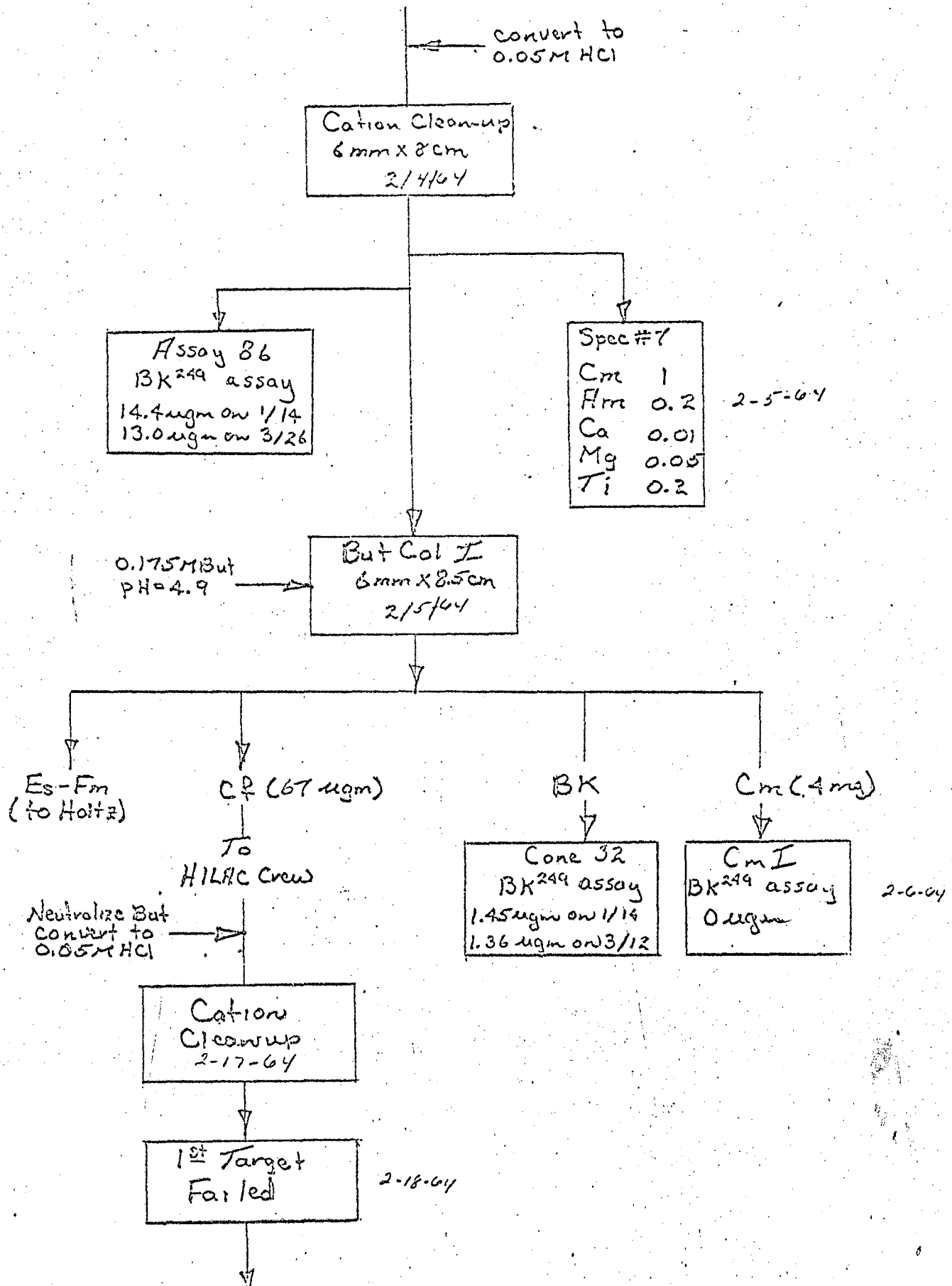
convert to 0.05M HCl
Cation Cleanup 6mm x 8cm 2/4/64
Assay 86 BK249 assay 14.4ugm on 1/14 13.0ugm on 3/26
Spec #7 Cm 1 Am 0.2 Ca 0.01 Mg 0.05 Ti 0.2
2-5-64
0.175M But pH=4.9
But Col I 6mm x 8.5cm 2/5/64
Es-Fm (to Holtz)
Cf (67 ugm)
To HILAC Crew
Neutralize But convert to 0.05M HCl
Cation Cleanup 2-17-64
1st Target Failed
2-18-64
BK
Cone 32 BK249 assay 1.45ugm on 1/14 1.36 ugm on 3/12
Cm (4mg)
Cm I BK249 assay 0 ugm
2-6-64

13

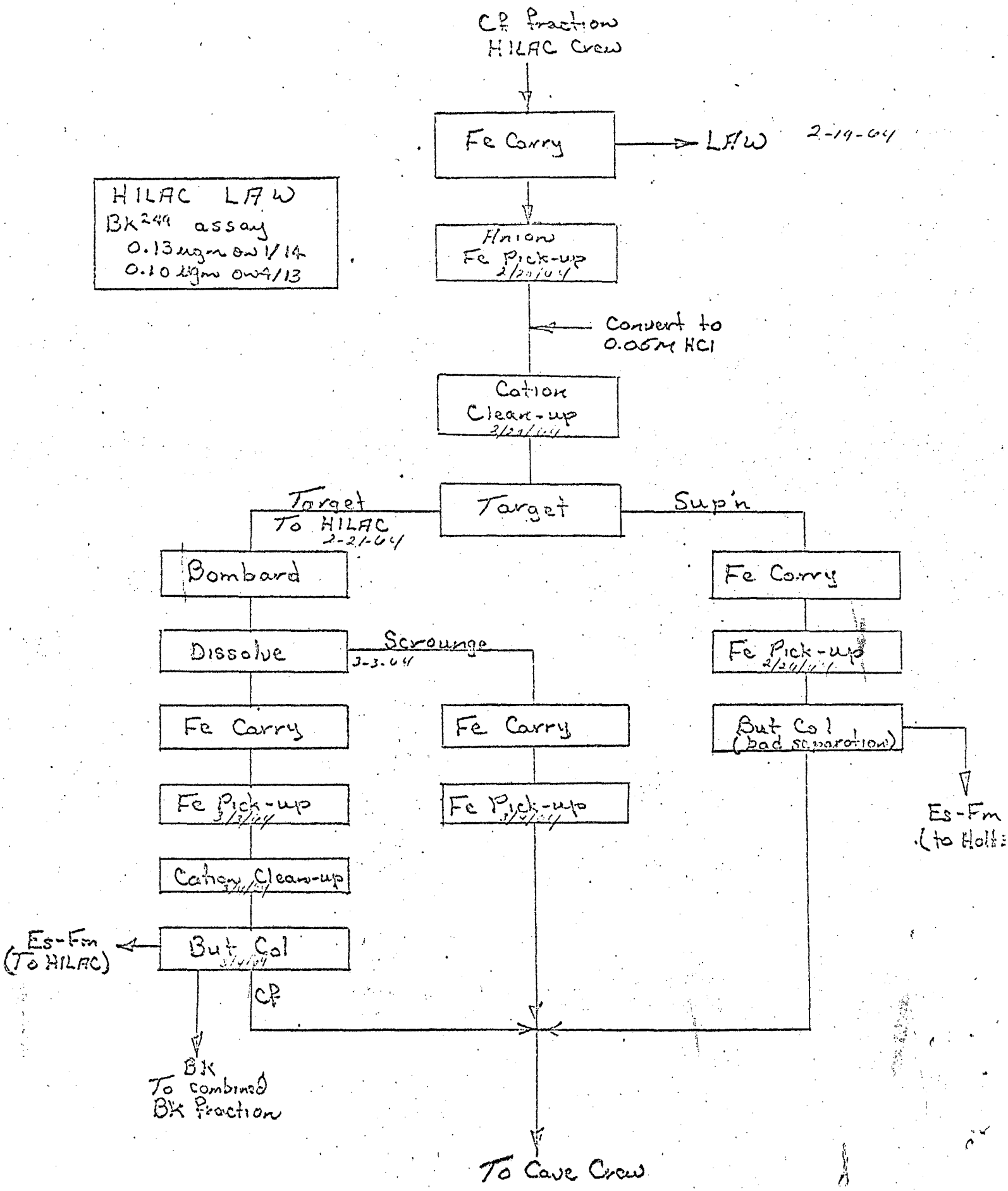
Cf Fraction
HILAC Crew
Fe Carry
LAW
2-19-64
HILAC LAW
Bk249 assay
0.13 μgm on 1/14
0.10 μgm on 4/13
Anion
Fe Pick-up
2/20/64
Convert to
0.05M HCl
Cation
Clean-up
2/21/64
Target
Target
To HILAC
2-21-64
Sup'n
Bombard
Fe Carry
Dissolve
Scrounge
3-3-64
Fe Pick-up
2/24/64
Fe Carry
Fe Carry
But Col
(bad separation)
Es-Fm
(to Holt
Fe Pick-up
3/3/64
Fe Pick-up
3/4/64
Cation Clean-up
3/4/64
Es-Fm
(To HILAC)
But Col
3/4/64
Cf
Bk
To combined
Bk Fraction
To Cave Crew

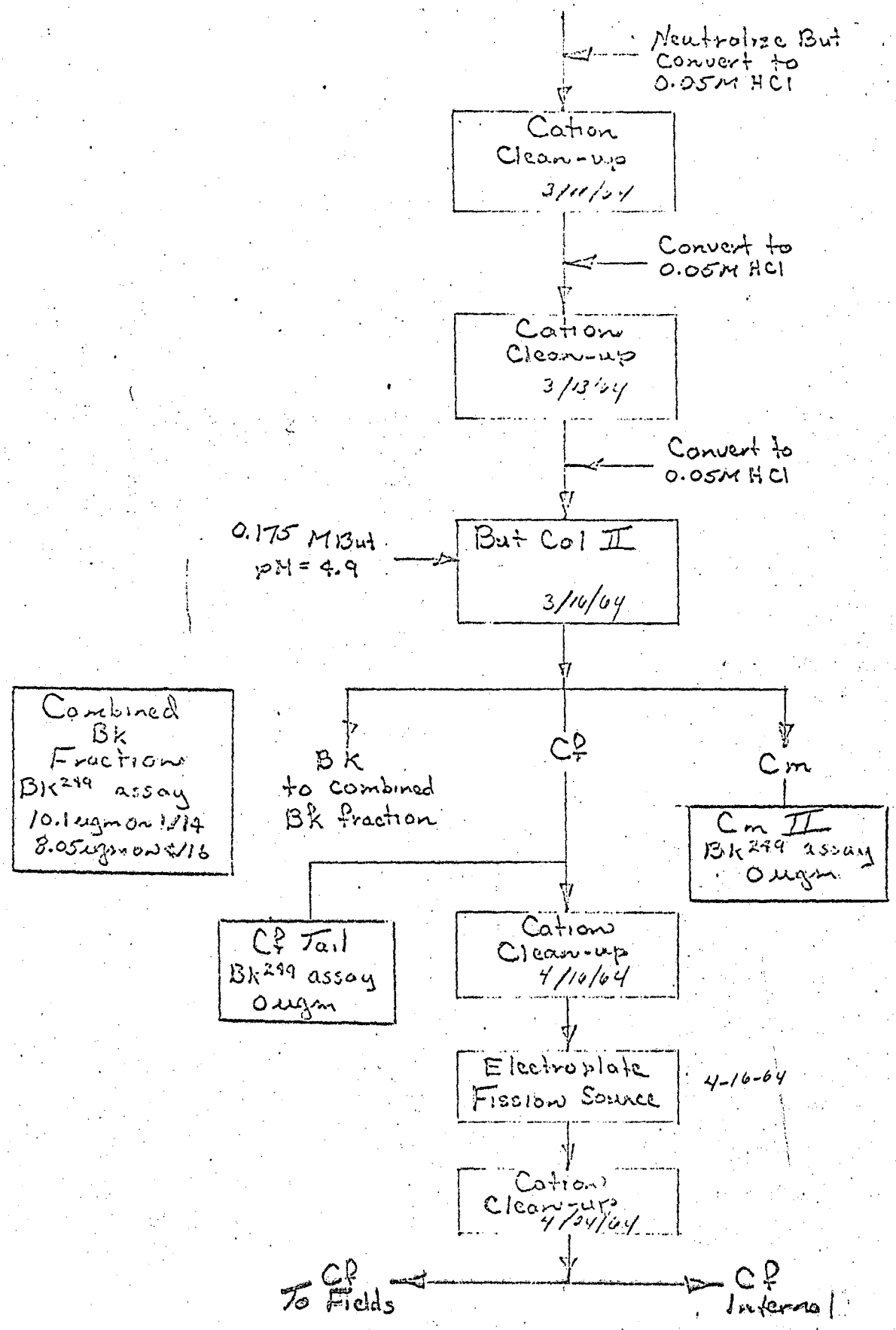
Neutralize But
Convert to
0.05M HCl
Cation
Clean-up
3/11/64
Convert to
0.05M HCl
Cation
Clean-up
3/13/64
Convert to
0.05M HCl
0.175 M But
pH = 4.9
But Col II
3/16/64
Combined
Bk
Fraction
Bk249 assay
10.1 μgm on 1/14
8.05 μgm on 4/16
Bk
to combined
Bk fraction
Cf
Cm
Cm II
Bk249 assay
0 μgm
Cf Tail
Bk249 assay
0 μgm
Cation
Clean-up
4/10/64
Electroplate
Fission Source
4-16-64
Cation
Clean-up
4/24/64
Cf
To Fields
Cf
Internal

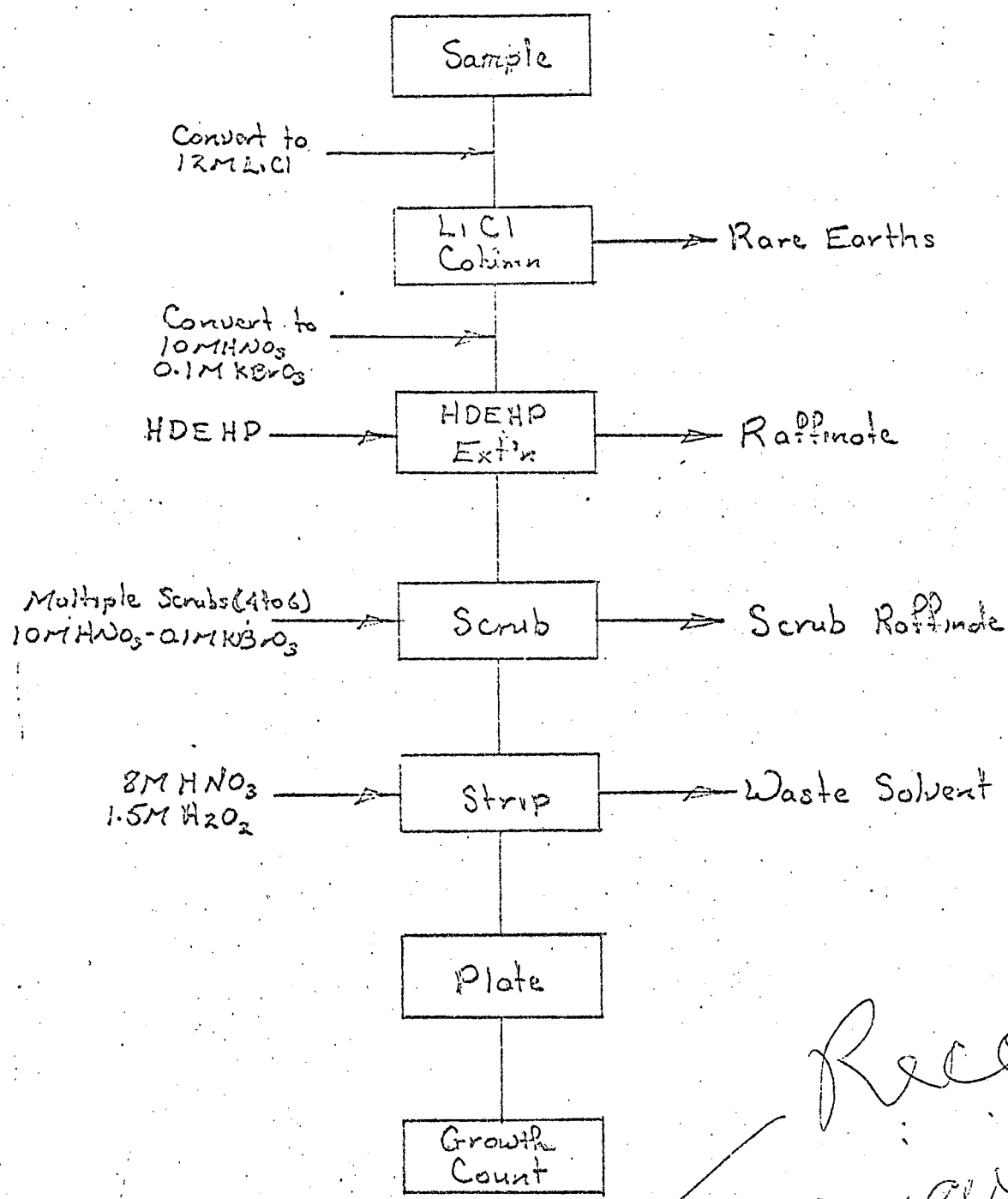

Recovery Original

Bk^{249} Assay Procedure

Figure II

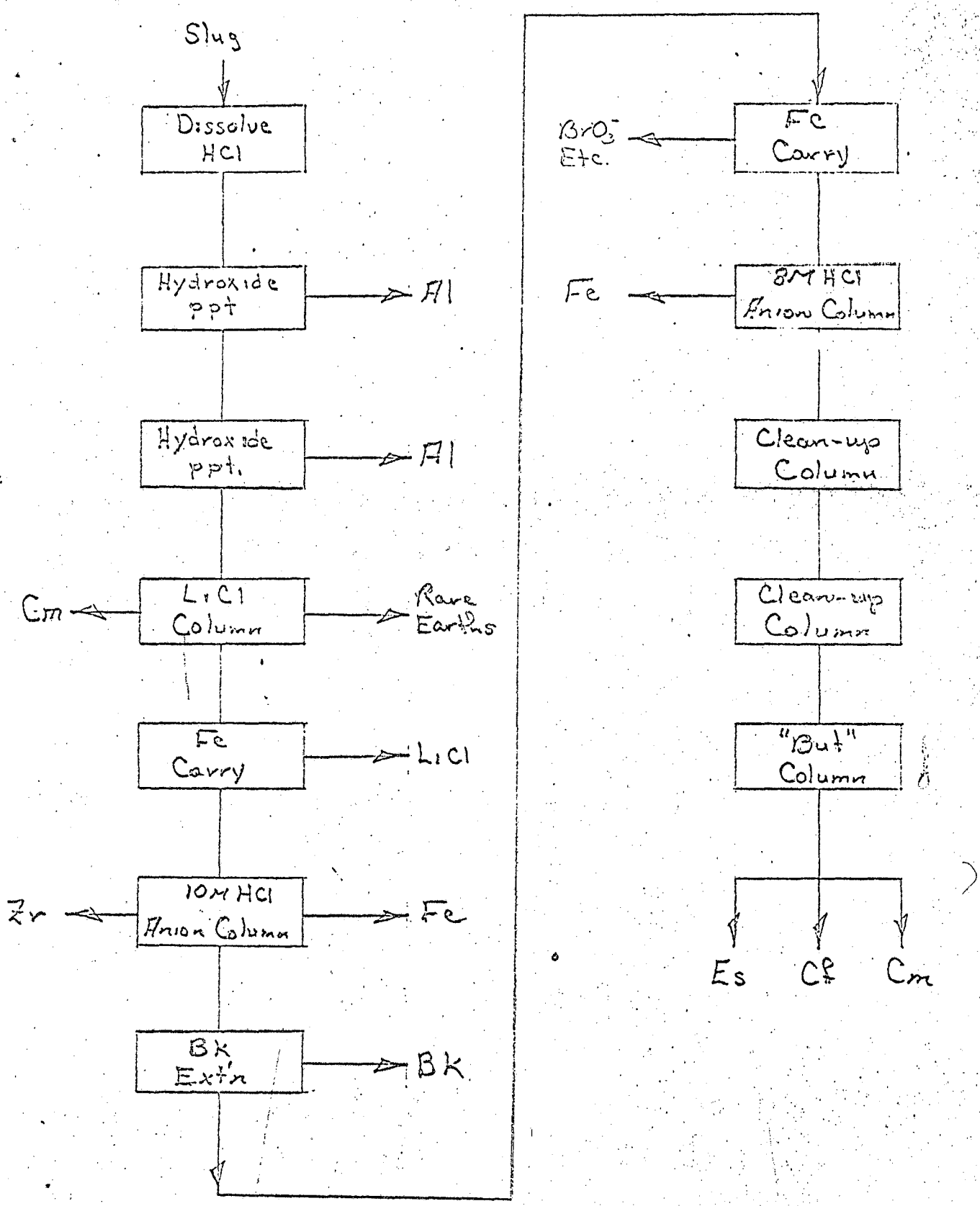

Recommended Flow Sheet.
Figure III

This report was prepared as an account of Government sponsored work. Neither the United States, nor the Commission, nor any person acting on behalf of the Commission:

A. Makes any warranty or representation, expressed or implied, with respect to the accuracy, completeness, or usefulness of the information contained in this report, or that the use of any information, apparatus, method, or process disclosed in this report may not infringe privately owned rights; or

B. Assumes any liabilities with respect to the use of, or for damages resulting from the use of any information, apparatus, method, or process disclosed in this report.

As used in the above, "person acting on behalf of the Commission" includes any employee or contractor of the Commission, or employee of such contractor, to the extent that such employee or contractor of the Commission, or employee of such contractor prepares, disseminates, or provides access to, any information pursuant to his employment or contract with the Commission, or his employment with such contractor.