UCRL-16433

University of California

Ernest O. Lawrence Radiation Laboratory

THE TEMPERATURE AND STRAIN-RATE DEPENDENCE OF THE FLOW STRESS OF AgMg SINGLE CRYSTALS

TWO-WEEK LOAN COPY

This is a Library Circulating Copy which may be borrowed for two weeks. For a personal retention copy, call Tech. Info. Division, Ext. 5545

Berkeley, California

DISCLAIMER

This document was prepared as an account of work sponsored by the United States Government. While this document is believed to contain correct information, neither the United States Government nor any agency thereof, nor the Regents of the University of California, nor any of their employees, makes any warranty, express or implied, or assumes any legal responsibility for the accuracy, completeness, or usefulness of any information, apparatus, product, or process disclosed, or represents that its use would not infringe privately owned rights. Reference herein to any specific commercial product, process, or service by its trade name, trademark, manufacturer, or otherwise, does not necessarily constitute or imply its endorsement, recommendation, or favoring by the United States Government or any agency thereof, or the Regents of the University of California. The views and opinions of authors expressed herein do not necessarily state or reflect those of the United States Government or any agency thereof or the Regents of the University of California.

Submitted to Journal of Applied Physics

UCRL-16433

UNIVERSITY OF CALIFORNIA

Lawrence Radiation Laboratory
Berkeley, California

AEC Contract No. W-7405-eng-48

THE TEMPERATURE AND STRAIN-RATE DEPENDENCE OF THE FLOW STRESS OF AgMg SINGLE CRYSTALS

A. K. Mukherjee,[1] W. G. Ferguson,[2] W. L. Barmore[3] and J. E. Dorn[4]

October, 1965

[1]Senior Scientist, Metal Science Group of the Battelle Memorial Institute, Colombus, Ohio.

[2]Post Doctoral Research Metallurgist, Inorganic Materials Research Division of the Lawrence Radiation Laboratory, University of California, Berkeley.

[3]Research Metallurgist, Inorganic Materials Research Division of the Lawrence Radiation Laboratory, University of California, Livermore.

[4]Professor of Materials Science of the Department of Mineral Technology and Research Metallurgist of the Inorganic Materials Research Division of the Lawrence Radiation Laboratory, University of California, Berkeley.

ABSTRACT

The effect of temperature and strain-rate on the flow stress of β-AgMg single crystals was investigated in the temperature range of 4° to 900°K and strain-rate range of 10^{-4} sec^{-1} to 10^{4} sec^{-1}. The low temperature data were found to obey the predictions of the Peierls' mechanism up to strain rates of 2.0×10^{4} sec^{-1}. Above strain rates of 2.0×10^{4} sec^{-1} the shear stress becomes athermal and strain-rate sensitive. The high temperature data was found to be thermally activated and showed increasing strength with decreasing temperature and increasing strain-rate.

I. INTRODUCTION

This investigation was undertaken for the purpose of elucidating the operative slip mechanisms in single crystals of AgMg as part of a more general program of study on the plastic behavior of intermetallic compounds. AgMg is interesting because it is representative of intermetallic compounds that crystallize in the CsCl lattice.[1] Early studies on the plastic behavior of polycrystalline aggregates revealed the usual trend of decreasing hardness with increasing temperature. More recently Wood and Westbrook[2] determined the effect of temperature on the tensile yield strength of polycrystalline aggregates. The original observation by Rachinger and Cottrell[3] that AgMg slips by the {123} $\langle 11\bar{1} \rangle$ mode at slow rates of deformation has since been reconfirmed.[4] The most recent investigations by Mukherjee and Dorn[4, 5] have been directed toward revealing the mechanisms of deformation in single crystals. For slow resolved shear-strain rates of $\dot{\gamma} = 4.2 \times 10^{-6}$ per sec the resolved shear stress for slip was found to decrease rapidly as the temperature was increased from 4° to 220°K in harmony with the expectations based on the thermally activated Peierls' mechanism for slip; between 220° and 360°K the critical resolved shear stress for $\dot{\gamma} = 4.2 \times 10^{-6}$ remained substantially constant at the high value of about 5000 psi in apparent agreement with Cottrell's theory[6] for athermal production of additional antiphase boundaries; creep over the temperature range of 733° to 828°K could be correlated with a diffusion controlled viscous creep mechanism appropriately modified to account for the effect of antiphase boundaries.

In the present work the investigation on the mechanisms of deformation

of Al-Mg was extended to the region of dynamic strain rates, covering the temperature range of 77°K to 900°K.

II. EXPERIMENTAL TECHNIQUE

Oriented single crystals of AgMg were grown from a master alloy containing equimolar amounts of high purity (99.995 wt %) Ag and high purity (99.997 wt %) Mg by means of a modified Bridgeman technique that was previously described.[4] Single crystals were grown with two kinds of orientations. The cylindrical tensile and compression specimens were grown so as to have the Schmid angles for $(\bar{3}21)$ [111] slip to be $\chi_o \approx \lambda_o \approx 45° \pm 1°$. The other series of crystals were grown to have the rectangular cross section of 1/8" x 1/4" and were oriented for pure shear on the {321} <111> system. A spark cutting machine was used to turn the as grown cylindrical crystals to tensile specimens. The spark damaged layer in the gauge surface was removed by electropolishing as described previously.[4]

The testing equipment used could be conveniently described under the three different ranges of strain rates that were employed: a) Slow strain rates extending approximately from 1×10^{-4} sec to 1×10^{-2} sec^{-1}. The tensile experiments over these strain rates were conducted in an Instron machine, using the methods outlined by Mukherjee and Dorn.[4] The shear tests over these strain rates were conducted using a special shear jig. b) Intermediate strain rates. Compression tests employing the strain rates of 1×10^{-1} and 1×10^{0} per sec were conducted using an Instron machine that had a crosshead speed of 20 inches per minute. The signal from the strain gauges in the Instron Load Cell was fed through a Baldwin SR-4 strain indicator into a Tektronik 535 oscilloscope that had been previously calibrated. c) Higher strain rates. The dynamic

compression and dynamic shear tests were conducted on a specially designed impact machine, employing the Kolsky thin wafer technique. The equipmental set up and method of analysis has been described previously by Larsen, Rajnak, Hauser and Dorn[7] and by Hauser and Winter[8] and need not be repeated here. The dimensions of specimens that were employed for the dynamic compression and shear tests are shown in Fig. 1.

Tests conducted below room temperature were carried out by complete immersion of the specimen in different constant temperature baths. Tests between room temperature and 575°K were conducted in a silicone oil bath with an accuracy of control of ± 1°K. Tests above 575°K were conducted in a Kanthal wound resistance furnace in conjuction with a proportional controller with an accuracy of control of ± 3°K.

III. RESULTS

The complete data of the strain rate and temperature dependence of the flow stress is shown in Fig. 2. As shown by surface slip trace analysis, all the crystals tested, deformed exclusively by $\{\bar{3}21\}$ <111> mode of slip. Metallographic examination of the deformed specimens revealed the absence of twinning.

For clarity the experimental data will be divided into the following headings.

Region (A) Low temperatures, strain rate up to 10^3:

In general the resolved shear stress for slip increased with increasing strain rates $\dot{\gamma}$ and decreasing temperature, revealing a thermally activated slip mechanism. At higher temperatures, depending on the strain rate, the thermally activated mechanism gave away to an athermal behavior. The flow stress was both strain rate and temperature insensitive over this athermal range.

Region (B)

At yet higher temperatures, at lower strain rates another thermally activated mechanism was observed, where the flow stress was dependent on both the strain rate and temperature.

Region (C - D)

Between the temperature range of 350° and 630°K, separating region (A) and region (B), there was an athermal region where the flow stress was dependent on the temperature but independent over certain ranges of strain rates. The strain rate range over which the flow stress was strain rate independent, depended on the temperature. This is illustrated

in Fig. 3.

Region (E)

At very high strain rates, i. e. 1.8×10^4 and over, the flow stress was independent of temperature and depended only on the strain rate.

IV. DISCUSSION

The present work incorporating a wide range of temperatures and strain rates, shows several operative mechanisms. We shall proceed to discuss the mechanisms separately, as far as practicable and then try to summarize the picture with an unified perspective at the end.

Region (A):

Several different approaches might be employed in the analysis of the data in region (A). Since dynamic data are difficult to obtain, it will serve the authors' objective to illustrate how accurately such results might be predicted from the more easily obtainable slow strain rate data. For this purpose it will be assumed that the data obey the Peierls' mechanism as formulated recently by Dorn and Rajnak.[9] Then using the slow strain tension data of Mukherjee and Dorn[4] to characterize the parameters of the Peierls' mechanism, the dynamic data will be predicted and compared with the experimental results.

Accordingly the shear strain rate, $\dot{\gamma}$, is given by

$$\dot{\gamma} = \rho ab \frac{L}{w} \nu e^{-\frac{Un}{kT}} \qquad (1)$$

where ρ = density of mobile dislocations

a = separation of Peierls' valleys

b = Burgers' vector

L = mean geometrically determined separation of a pair of kinks after nucleation

ν = Debye frequency

w = width of critical loop size

k = Boltzman constant

T = temperature in °K

U_n = saddle point free energy

Equation (1) assumes that only one pair of kinks moves during nucleation in a length L and will be used here since it predicts results in good agreement with the experimental data. At critical temperature where the nucleation of a pair of kinks due to thermal fluctuation is immediate, Eq. (1) can be rewritten as

$$\dot{\gamma} = \rho ab \frac{L}{w_c} \nu e^{\frac{2UK}{kT_c}} \qquad (2)$$

where $2U_K$ is the energy of formation of a pair of kinks and w_c is the critical width of the loop. But as shown by Dorn and Rajnak[9] $w \simeq w_c$, therefore Eqs. (1) and (2) give

$$\frac{U_n}{2U_K} \simeq \frac{T}{T_C} \qquad (3)$$

When all the Peierls' hill is sinusoidal (which has been shown to be the case for AgMg in previous work by Mukherjee and Dorn), the theoretical evaluation of $U_n/2U_K$ as a function of $\frac{\tau^*}{\tau_p}$ is given in Fig. 4, where τ_p is the magnitude of Peierls' stress at 0°K and τ^* is the thermally activated component of the applied stress. Using Eq. (3) in conjunction with Fig. 4, $\frac{\tau^*}{\tau_p}$ can be obtained as a function of $\frac{T}{T_C}$.

Assuming that ρ and L are the same in each test specimen whether tested under static or dynamic conditions, the theory gives

$$\dot{\gamma}_1/\dot{\gamma}_2 = (e^{-2U_K/kT_{C_1}})/(e^{-2U_K/kT_{C_2}}) \qquad (4)$$

For $\{\bar{3}21\}$ <111> slip in AgMg, Mukherjee and Dorn report[4] $2U_K = 0.664 \times 10^{-12}$ ergs, τ_p at 0°K = 9.3×10^8 dynes/cm^2, and $T_C = 214°$ for $\dot{\gamma} = 4.2 \times 10^{-6}$ per sec. Using Eqs. (3) and (4) together with Fig. 4 and these data, theoretical values of τ^* can be computed for various shear strain rates.

The total applied stress τ is made up of two components, the thermally activated component τ^* and the athermal component τ_A that is required for overcoming stresses such as short and long range back stresses etc. τ_A is assumed to diminish in proportion to the decrease in the shear modulus as the temperature is increased. Using the data of Chang (as reported in reference number 4) on the variation of shear modulus with temperature and τ_A at 273°K $\simeq 3.8 \times 10^8$ dynes/cm^2, one can obtain τ_A as a function of temperature. Thus one can construct the theoretical flow stress vs. temperature curves for different strain rate, assuming Peierls' mechanism to be the operative process. In Fig. 2 in region (A) the dashed lines are the theoretical curves. It is evident from Fig. 2 region (A) that the correlation of experimental data with the theoretical prediction is quite good.

The upper limit of the strain rate up to which the Peierls' process is still the operative mechanism can be established theoretically from Eq. (4). Using $\dot{\gamma}_1 = 4.2 \times 10^{-6}$, $T_{C_1} = 214°K$, $T_{C_2} = \infty$, $2U_K = 0.664 \times 10^{-12}$ ergs, the value of $\dot{\gamma}_2$ is found to be 2.4×10^4 sec^{-1}. As seen in Fig. 2, this prediction is also very good and that at strain rate $\simeq 1.8 \times 10^4$ sec^{-1}, the flow stress becomes independent of testing temperature.

Region (B):

At a constant strain rate the flow stress in region (B) increases

as the temperature decreases, thereby revealing a thermally activated mechanism. The plot of log shear stress vs. log shear strain rate at constant temperature (Fig. 5) is nonlinear. Thus no unique stress dependence of the strain rate could be found over this region. The apparent activation energy q as defined by $q = \frac{\partial \ln \dot{\gamma}}{\partial(-1/kT)}$, where $\dot{\gamma}$ = shear strain rate, T = temperature in degrees Kelvin, K = Boltzman constant, was found to be dependent on the shear stress. So such thermally activated processes like the climb of dislocations[10] or the viscous glide of dislocations,[11] where the activation energy is insensitive to stress, cannot be the rate controlling mechanism. The experimental data when correlated to the theory of creep based on a model of jogged screw[12] dislocations, predicted a decrease in activation volume with increase in stress, and the model was found not to fit the data. It was also found that the equation for creep in the 733° to 828°K temperature range determined by Mukherjee and Dorn[5] could not be extrapolated into the present range of data. It was thought that part of the high temperature behavior might be caused by recrystallization but some x-ray work found no evidence for this idea.

With the present data it was not possible to satisfactorily correlate the experimental results with any of the existing theories of creep. It is possible that perhaps more than one mechanism is rate controlling and in that case it may be impossible to separate uniquely the different mechanisms, that are contributing to the deformation process.

Region (C - D):

This athermal region separates the two thermally activated regions A

and B respectively. The interesting point over this region is that the flow stress increases with increase of temperature and, at any temperature, there is a range of strain rates where the flow stress is strain rate insensitive, and above or below which the flow stress is thermally activated. Earlier work (see reference 13) has shown that in many intermetallic compounds, there is an increase in flow stress with an increase in temperature at some appropriate intermediate temperature range, though the effect of strain rates on the flow stress over such temperatures has been inadequately investigated.

Among the intermetallic compounds that show this behavior, there are those that are ordered up to the melting point and those that are disordered at some temperature below the melting point. For the latter category of intermetallic compounds it has been suggested by Stoloff and Davies[14] that the increase in strength with increasing temperature arises because the spacing between the super dislocation pair changes with order, the spacing increasing with decreasing order. The stress necessary to move a super dislocation is much less than that required to move an imperfect dislocation and hence the flow stress increases as the temperature increases. Although other theories (for a summary see references 13 and 14) have been proposed to explain the elevated temperature behavior of this class of intermetallics, it is felt by Westbrook[13] that the above explanation is the one that gives best agreement for such compounds. But all these theories depend on the change of the degree of long range order of the compound over an intermediate temperature range.

There are very little experimental data available for the other category of intermetallic compounds where the long range order persists up to the melting point. Ni_3Al and AgMg are the only intermetallic compounds that have been investigated. Both of these compounds are fully ordered up to their melting point[15,16] and show increases in flow stress with increasing temperature[16] for temperatures well below half the melting point. Flinn[16] has postulated that because of the crystallographic anisotropy of domain wall energy associated with the superdislocation, there will be a tendency for the dislocation to climb in such a way as to minimize this component of energy. At temperatures where diffusion is sufficiently rapid, this will occur and the resulting jogged dislocation will now be more difficult to move since displacement on the normal slip plane will generate additional antiphase boundary. This theory cannot account for increase in flow stress at low temperatures where diffusion is not sufficiently rapid. Moreover in the case of Ni_3Al, Stoloff and Davies[17] have demonstrated that the increase in strength was not due to the diffusion controlled mechanism proposed by Flinn. Stoloff and Davis speculated on a possible mechanism which involved the anisotropy of thermal vibrations which they expected would be manifest in cases of completely ordered LI_2 structures such as Ni_3Al. The suggestion of marked anisotropy in thermal vibration because of the different nature of adjacent rows of atoms along the <110> slip direction of a close packed plane in Ni_3Al with its LI_2 structure, cannot be directly applied to the case of AgMg. In AgMg with its CsCl type of structure, there is no difference in the nature of adjacent rows of

atoms in [111] directions of a close packed plane. Moreover, Westbrook[18] has published hot hardness curves for the compound Ir_3Cr which is isomorphous with Ni_3Al, and has a significantly higher melting point and also remains ordered up to the melting point. No unusual peaks are observed on the hardness curve for this material analogous to those found in Ni_3Al.[19] Thus none of the theories discussed so far satisfactorily explain the rise in flow stress over such intermediate temperatures. This behavior appears to be related to a lattice resistance which is unusual in that it increases with temperature.

Region (D):

Above the maximum stress predicted by the low temperature thermally activated mechanism the flow stress becomes athermal but remains strain-rate sensitive. The data suggests that when the imposed shear stress exceeds $(\tau_p + \tau_A)$ the stress is high enough to overcome the thermally activated mechanism without assistance from thermal fluctuations. A similar effect has been observed for polycrystalline aluminum[20] tested under dynamic compression. For aluminum the stress was found to increase linearly with strain rate. There are insufficient data at the high strain rates in the present investigation to prove conclusively that the stress increases linearly with strain rate. Although little is understood about this high strain rate behavior it is thought[21] that the flow stress is controlled by some dislocation viscous damping mechanism.

V. CONCLUSIONS

(a) The low temperature behavior is thermally activated and obeys the dictates of Peierls' mechanism. The high strain rate data over this region can be satisfactorily predicted from the more easily obtainable slow strain rate data. The limiting shear strain rate beyond which Peierls' mechanism ceases to be operative is 2.4×10^4 per sec.

(b) The high temperature mechanism is thermally activated and shows increasing stress with increasing strain rate and decreasing temperature. The present data cannot be satisfactorily correlated to any of the existing theories of creep.

(c) There appears a temperature sensitive, strain rate insensitive region which divides the low and high temperature thermally activated mechanisms. The increase in stress with increase in temperature cannot be explained by any of the mechanisms proposed thus far.

(d) For strain rates higher than 2.0×10^4 the shear stress becomes athermal and strain rate sensitive.

ACKNOWLEDGMENTS

This research was conducted as part of the activities of the Inorganic Materials Research Division of the Lawrence Radiation Laboratory of the Universtiy of California, Berkeley. The authors express their appreciation to the United States Atomic Energy Commission for its support of this effort.

REFERENCES

1. A. Westgren and G. Phragmen, Metallwirtschaft, 7, 700-703 (1928).

2. D. L. Wood and J. M. Westbrook, Trans. AIME, 224, 1024-1036 (1962).

3. W. A. Rachinger and A. H. Cottrell, Acta Met., 4, 1 (1956).

4. A. K. Mukherjee and J. E. Dorn, Trans. AIME, 230, 1065 (1964).

5. A. K. Mukherjee and J. E. Dorn, J. Inst. of Metals, 93, 397 (1964-65).

6. A. H. Cottrell, "Relations of Properties to Microstructure", Amer. Soc. Metals, Cleveland, Ohio, 131 (1954).

7. T. L. Larsen, S. L. Rajnak, F. E. Hauser and J. E. Dorn, J. Mech. Phys. Solids, 12, 361-676 (1964).

8. F. E. Hauser and C. A. Winter, "An Experimental Method for Determining Stress Strain Relations of High Strain Rates", University of California, M.R.L. Pub., Series 133, Issue 4.

9. J. E. Dorn and S. L. Rajnak, Trans. AIME, 230, 1052-1064 (1964).

10. J. Weertman, J. Appl. Physics, 28, 362 (1957).

11. J. Weertman, Ibid., 28, 1185 (1957).

12. L. Raymond and J. E. Dorn, Trans. AIME, 230, 560 (1964).

13. J. H. Westbrook, High-Strength Materials, John Wiley and Sons, Inc., New York, 737 (1965).

14. N. S. Stoloff and R. G. Davies, Acta Met., 12, 473 (1964).

15. W. L. Bragg and E. J. Williams, Proc. Roy. Soc. (London) A151, 540 (1935).

16. P. A. Flinn, Trans. AIME, 218, 145 (1960).

17. R. S. Davies and N. S. Stoloff, Trans. AIME, in press (1965).

18. J. H. Westbrook, High Temperature Technology, Stanford Res. Inst.,

McGraw-Hill Book Co., New York (1960).

19. R. W. Guard and J. H. Westbrook, Trans. AIME, 215, 807 (1959).

20. F. E. Hauser, J. A. Simmons and J. E. Dorn, "Strain Rate Effects in Plastic Wave Propagation", Response of Metals to High Velocity Deformation, Interscience, New York (1961).

21. J. E. Dorn, J. Mitchell and F. E. Hauser, University of California, Lawrence Radiation Laboratory Report No. UCRL-11977.

FIGURE CAPTIONS

Figure 1. Testing Fixtures

Figure 2. Flow Stress as a Function of Temperature and Strain-Rate

Figure 3. Flow Stress as a Function of Strain-Rate at 444°K, 550°K and 600°K

Figure 4. Energy to Nucleate a Pair of Kinks

Figure 5. Shear Strain-Rate Versus Flow Stress for the High Temperature Data

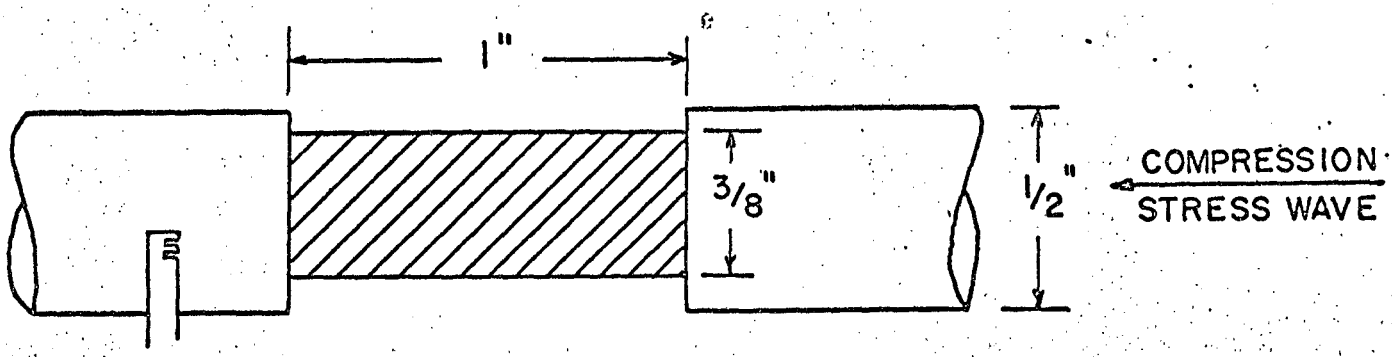

SLIP PLANE AND BURGER'S VECTOR
AT 45° TO SPECIMEN AXIS.
(a)

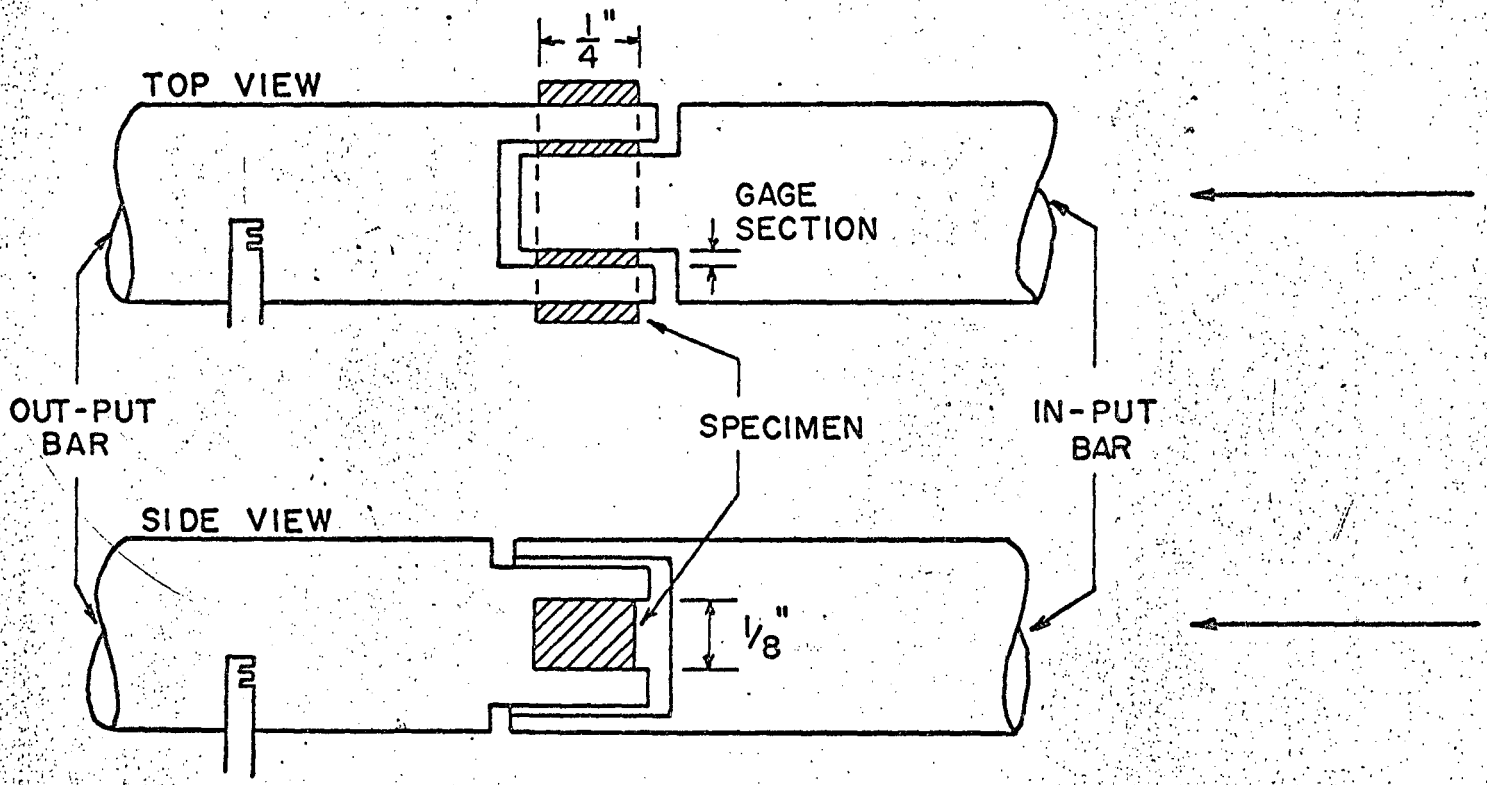

SLIP PLANE AND BURGER'S VECTOR
PARALLEL TO COMPRESSION AXIS.

(b)

FIG. 1 TESTING FIXTURES.

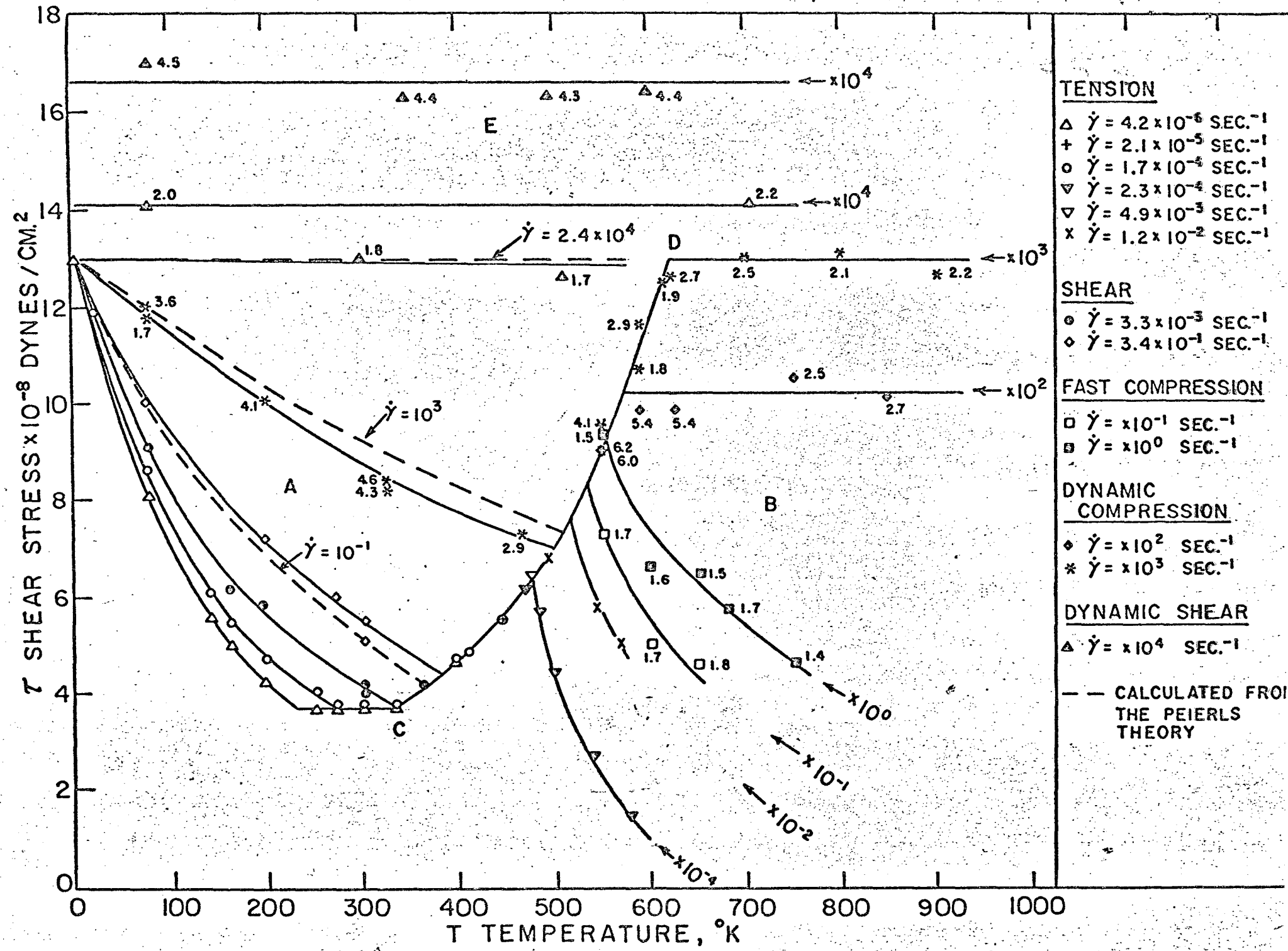

FIG. 2 FLOW STRESS AS A FUNCTION OF TEMPERATURE AND STRAIN-RATE.

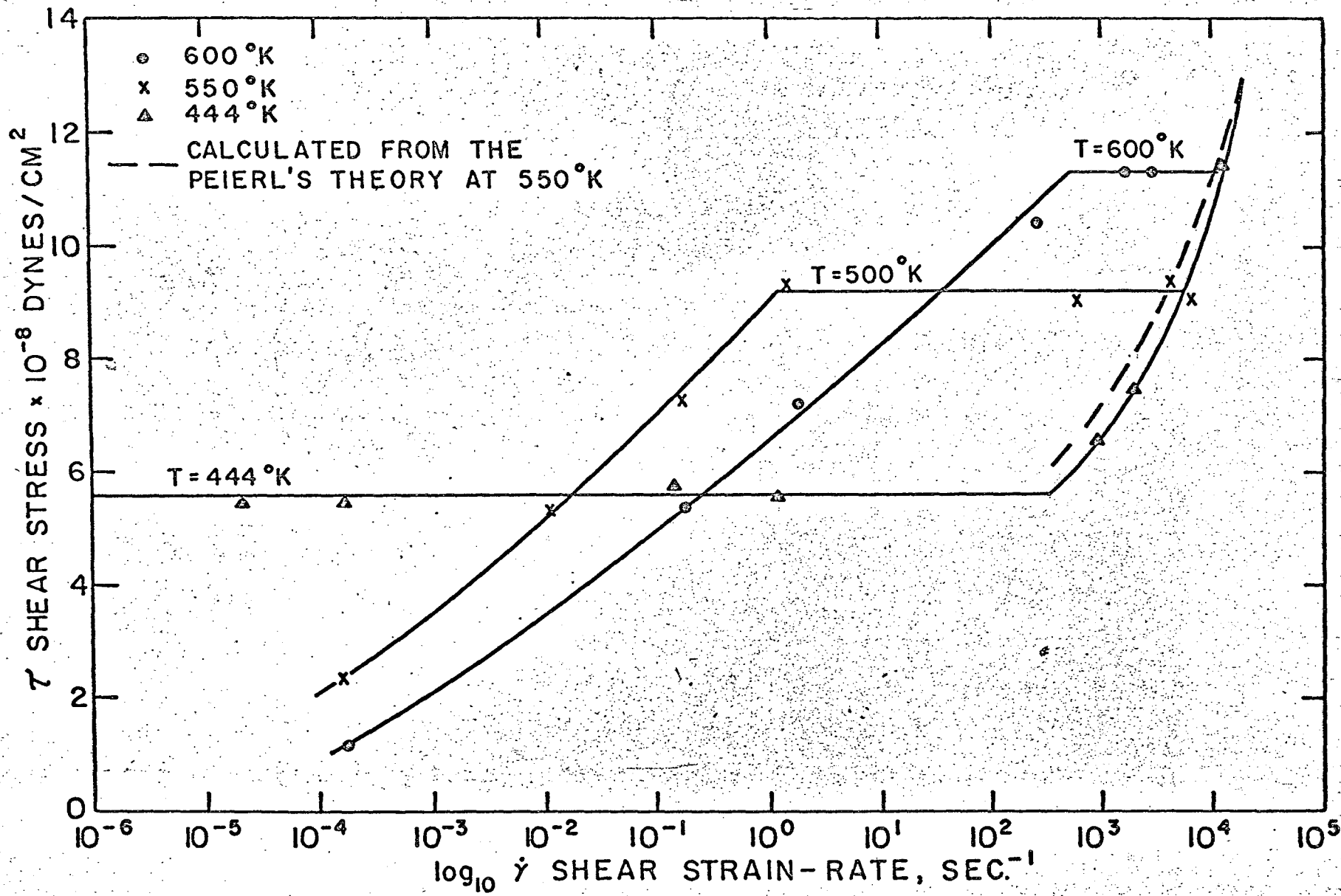

FIG. 3 FLOW STRESS AS A FUNCTION OF STRAIN-RATE AT 444°K, 550°K AND 600°K.

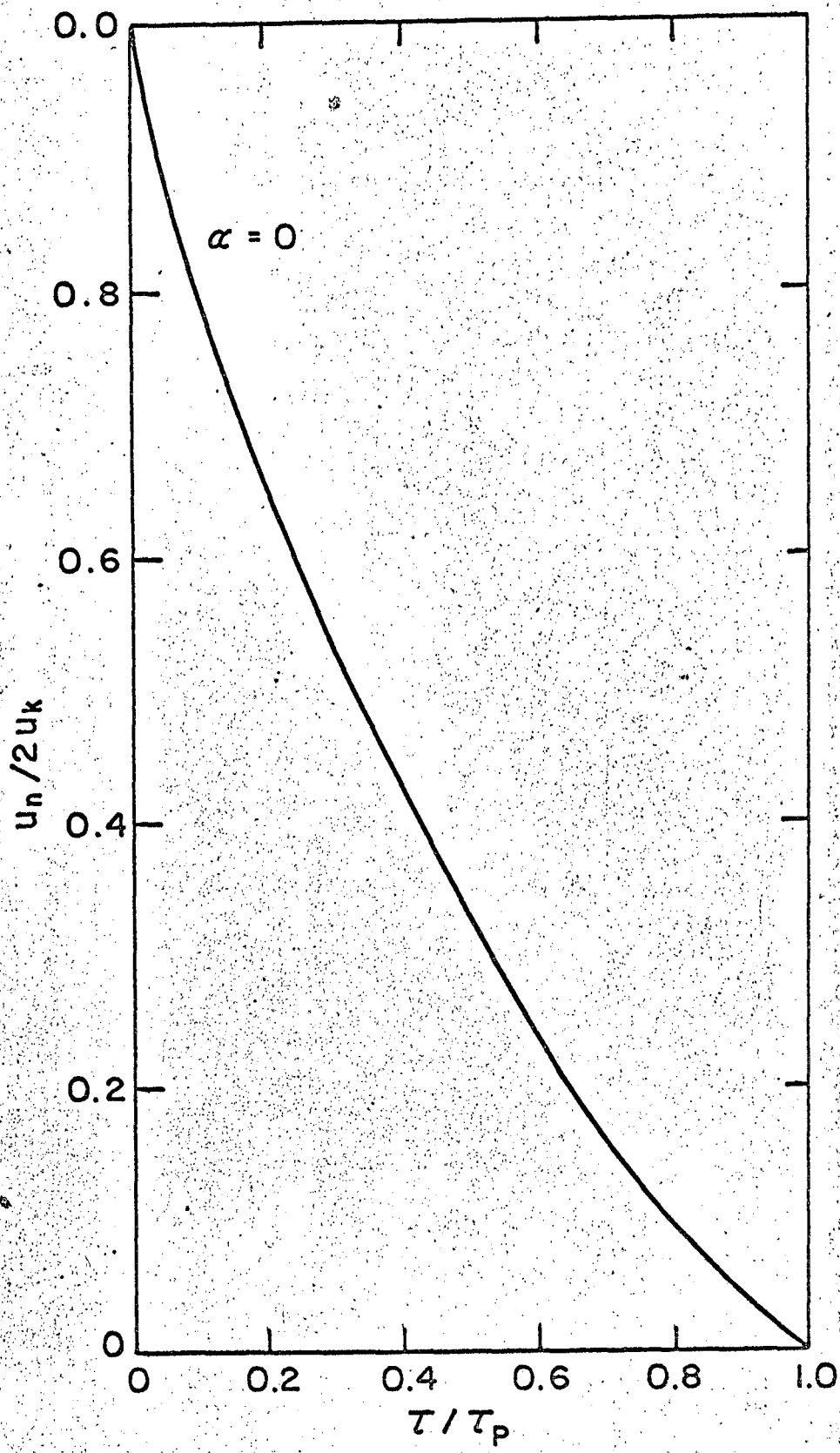

FIG. 4 ENERGY TO NUCLEATE A PAIR OF KINKS.

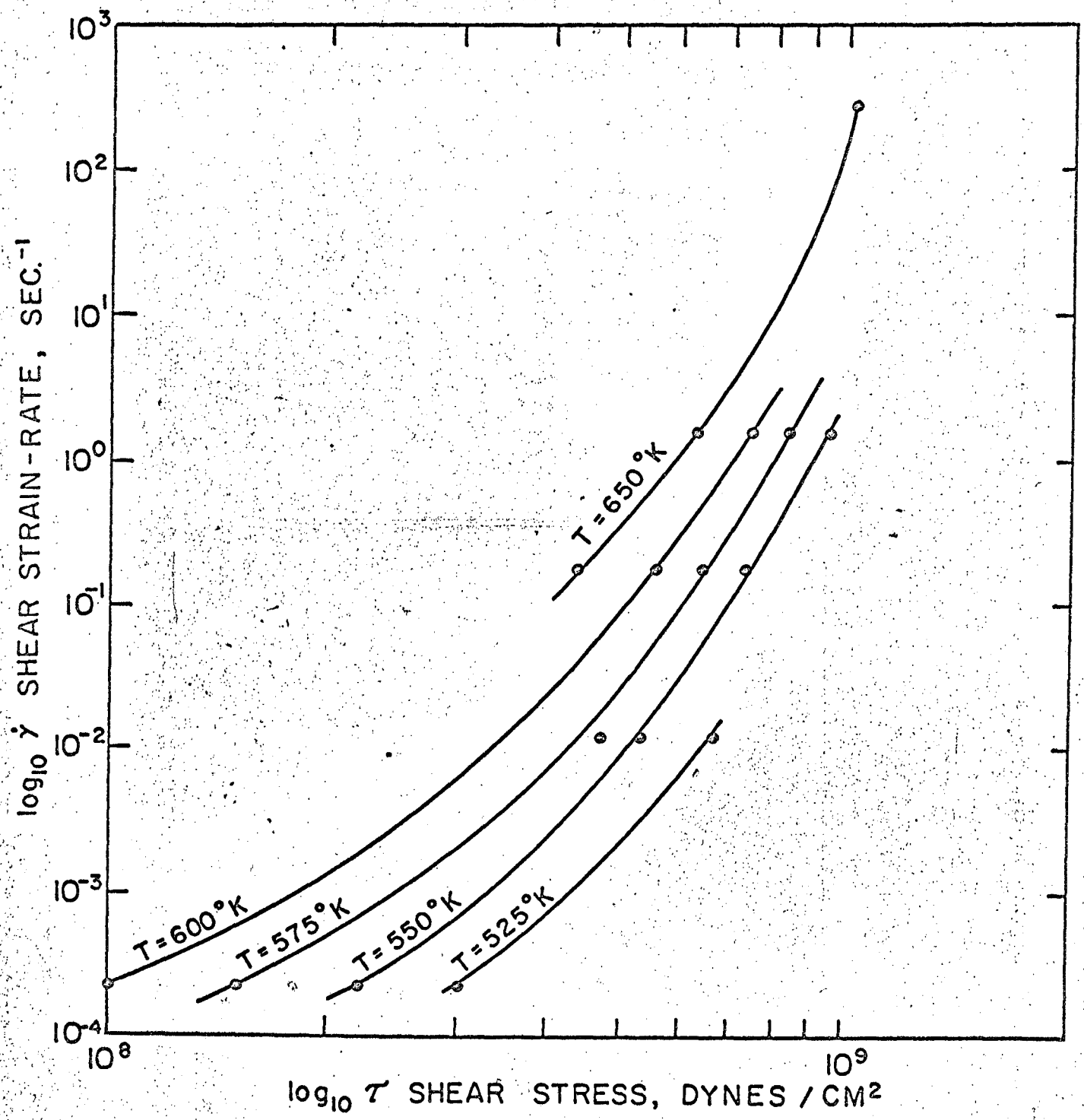

FIG. 5 SHEAR STRAIN-RATE VERSUS FLOW STRESS FOR THE HIGH TEMPERATURE DATA.