UCRL-16466

University of California

Ernest O. Lawrence Radiation Laboratory

IGNITION OF DROPLETS IN A STAGNANT ATMOSPHERE

TWO-WEEK LOAN COPY

This is a Library Circulating Copy which may be borrowed for two weeks. For a personal retention copy, call Tech. Info. Division, Ext. 5545

Berkeley, California

DISCLAIMER

This document was prepared as an account of work sponsored by the United States Government. While this document is believed to contain correct information, neither the United States Government nor any agency thereof, nor the Regents of the University of California, nor any of their employees, makes any warranty, express or implied, or assumes any legal responsibility for the accuracy, completeness, or usefulness of any information, apparatus, product, or process disclosed, or represents that its use would not infringe privately owned rights. Reference herein to any specific commercial product, process, or service by its trade name, trademark, manufacturer, or otherwise, does not necessarily constitute or imply its endorsement, recommendation, or favoring by the United States Government or any agency thereof, or the Regents of the University of California. The views and opinions of authors expressed herein do not necessarily state or reflect those of the United States Government or any agency thereof or the Regents of the University of California.

UCRL-16466

UNIVERSITY OF CALIFORNIA
Lawrence Radiation Laboratory
Berkeley, California

AEC Contract W-7405-eng-48

IGNITION OF DROPLETS IN A STAGNANT ATMOSPHERE

Kern Spaulding Savage

(M. S. Thesis)

October 1965

TABLE OF CONTENTS

Abstract iii

I. INTRODUCTION 1

A. Background of Droplet Combustion 1

1. Theoretical Analysis of Burning Rates 1

2. Experimental Techniques and Observation 5

3. Ignition: Theory and Experimental Observations 9

4. Need for Further Research 11

B. Discussion of the Problem 12

II. EXPERIMENTAL DESIGN 14

A. General Considerations 14

B. Production and Control of the Experimental Environment . . 16

C. Droplet Formation 18

D. Photographic Observation 21

III. EXPERIMENTAL APPARATUS 24

IV. EXPERIMENTAL PROCEDURE 29

V. EQUIPMENT TEST AND DISCUSSION 32

VI. CONCLUSIONS 37

ACKNOWLEDGEMENTS 40

FIGURES 41

APPENDICES

A. Mathematical Model for Droplet Injector 50

B. Strength of Pressure Vessel 55

C. Injector Design Calculation 57

REFERENCES 59

IGNITION OF DROPLETS IN A STAGNANT ATMOSPHERE

Kern Spaulding Savage

Inorganic Materials Research Division,
Lawrence Radiation Laboratory,
Department of Chemical Engineering,
University of California, Berkeley, California

October 1965

ABSTRACT

This study is concerned with the ignition of liquid fuel droplets in a high temperature, stagnant, gaseous environment, under pressures ranging from 1 to 10 atmospheres. More specifically, the objective of the study is to design and develop an experimental apparatus which will enable determination of ignition lag times of small droplets (100μ to 500μ in diameter) from high speed motion picture records of the ignition process. The experimental apparatus includes an electrically heated ceramic crucible mounted within a pressure vessel to produce the experimental environment, an injecting mechanism for rapidly forming the droplets in the experimental observations.

Equipment tests determined that the test chamber can attain temperatures as high as 1500°C and that small droplets of 100μ to 500μ in diameter can be formed and photographed under ambient conditions in the test chamber. No tests at elevated temperatures were completed because of problems of sample heating in the injection mechanism. A method of rapid insertion of the injector mechanism in the test chamber is described, which may overcome the problems at atmosphere pressure, but modifications to this device are necessary for experiments at elevated pressures.

I. INTRODUCTION

A. Background of Droplet Combustion

The processes of evaporation, ignition, and burning of liquid fuel droplets are complex, interrelated phenomena. One method of gaining insight into the general problem of fuel combustion is to single out one particular process for close observation. This study is principally concerned with developing an experimental apparatus for observing the spontaneous ignition of liquid fuel droplets in high temperature, gaseous environment. In duplicating the general conditions under which droplet ignition takes place, it is important to be aware of the overall problem of droplet combustion. Therefore, a brief survey of the literature is germane to the discussion.

1. Theoretical Analysis of Burning Rates

The phenomenon of droplet combustion has been treated as a case of simultaneous heat and mass transfer. Such attacks have not been entirely successful, because a number of significant variables were assumed constant or unimportant. Theoretical analyses of droplet combustion have been made by Godsave, Spalding, Goldsmith and Penner, Okayaki and Gomi, and others.[1-9] Although these studies differ somewhat in minor points of emphasis and some are more general than others, they are essentially similar. They all assume a steady state of burning for a combustion model of spherical symmetry. This entails, in addition to the absence of natural and/or forced convection, the following assumptions:

(a) Droplet surface and flame front form concentric surfaces.

(b) Solution obtained for a fixed radius applies to a droplet when that radius is reached.

(c) Radiant heat is neglected.

(d) Droplet has uniform temperature corresponding to boiling point of fuel.

(e) Combustion process is isobaric.

(f) There is an infinitely fast reaction at a layer of zero thickness where mass fraction of fuel and oxidizer equal zero.*

(g) Combustion is in steady state.

(i) The rates of delivery of fuel and oxygen to flame front are in stoichiometric proportions.

On the basis of these assumptions, it was found that the burning rate is proportional to droplet radius, and therefore, the square of droplet diameter is a linear function of time:

$$D^2 - D_o^2 = kt$$

where D is the droplet diameter at any time, t, and D_o is the initial droplet diameter. It was also found that the flame/droplet radius ratio should not depend upon droplet radius.

A number of experimental investigations of these theories have been made, and the results more or less agree with the theories, depending on the experimental conditions and the systems used. For droplets larger than 800μ in diameter and pressures at or above one atmosphere, the above equation has been experimentally verified any number of times, and the experimental and theoretical values of burning rate constant, k, were

* Lorell, Wise, and Carr[10] studied the effects of chemical kinetics and did not make this assumption.

in agreement.[1,3,5-8,11,12] The experimental measurements of the flame/droplet radius ration, however, have indicated that the ratio does not remain constant, but increases as droplet radius decreases.[5,8] Also the predicted flame radii did not agree with experimental measurements. This lack of agreement was at first attributed to the effects of natural convection on the combustion process, but experiments in a zero gravity field affirmed the earlier results.[8] This prompted an approximate theory based on a transient combustion model.[11]

If transient behavior in droplet combustion is an important phenomenon, then the transient effects will be more important at higher pressures, because the quasi-steady state formulas predict that the vaporization rate increases to infinity as the pressure increases to the critical pressure. In addition, at higher pressures the mass of gas in the combustion chamber or in the area surrounding the droplet increases, and hence, also the heat capacity increases. This, then, involves a transient term in the energy equation. A theoretical treatment of the transient problem, which neglects chemical kinetics by assuming all diffusion coefficients equal, has been undertaken by Spalding.[13] He attempts to predict the burning rate of fuel particles at high pressure, regardless of whether or not the phase boundary has disappeared. His theoretical development discards the assumption of a steady state burning, as well as the associated concept of vaporization controlling combustion. The exact solutions to the equations presented require numerical integration, but a simplified solution is worked out, which assumed gas properties independent of temperature. Particularly interesting is the assumption of a fuel vapor concentration in the surrounding gas. The conclusions arrived at by Spalding are: the effect of combustion products in oxidant

gas on transfer number is negligible; burning time increases as the fuel/oxidant ratio in the atmosphere approaches a stoichimetric value; the steady state model underestimates burning times at high pressures; and, as the steady state model concluded, the rate of change of the droplet diameter is constant for burning droplets.

At least part of the impetus for the treatment of a transient model stemmed from the observations of the behavior of flame/droplet radius ratio and its dependence on droplet radius. The idea of a transient phenomenon was more or less invoked as an explanation of this behavior. However, some experiments in steady state combustion have used a porous sphere technique, showing a similar variation in flame/droplet radius ratio with droplet diameter.[5,14]

Another theoretical approach used by Tarifa, del Notario, and Moreno[15] and by Lorrell, Wise, and Carr[10] involved the consideration of chemical kinetics, diffusion of species of different molecular weights, and different Lewis-Semenov numbers. The results of this development indicate that an asymptotic solution is obtained for burning rates, for an infinite reaction rate, which is strictly applicable only when the droplet diameter or the pressure approaches infinity. In general, burning rates tend rapidly toward their asymptotic values, but for small droplets or at low pressures, large errors are apparently introduced by assuming infinite reaction rates. The theoretical and experimental conclusions also show that under certain conditions of pressure or droplet radius, combustion is impossible.[15] Some of the principal assumptions of Tarifa, del Notario, and Moreno are: spherical symmetry, steady state, negligible heat transferred to droplet surface by radiation, chemical kinetics approximated by an overall nth order reaction. The experimental

results for a bromine-hydrogen system-- used because chemical kinetics are known for this reaction--show there is a minimum pressure (4 atmospheres) necessary for combustion of a droplet of a specific diameter (1.0 mm.), which is in agreement with the calculated value of 5.5 atmospheres. Combustion of heptane droplets under reduced pressures shows that the flame radius becomes larger and the flame temperature cooler--also agreeing with the theoretical predictions. An attempt to experimentally determine the extinction radius of heptane and ethyl alcohol droplets as a function of pressure yielded data which were too scattered for any conclusion.

Although the steady state spherical flame model of combustion is useful in some cases, the assumptions made in its development seem to be too broad for an accurate theoretical description of the combustion process. At least three of the assumptions have been theoretically studied for validity. Only assumption (b) is reported to be always valid. The assumption of steady state may also lead to errors of 20% in vaporization times.[16] The additional theoretical schemes, involving the transient and a steady state model considering chemical kinetics, seem to be significant advances toward a workable theory.[11,13,15] However, at the present time there is no general agreement on any model describing the entire combustion process after ignition.

2. Experimental Techniques and Observation

Experimental techniques vary somewhat in their sophistication, but in general two methods of observation are used. One is to leave the droplet free either in free fall or in an upward trajectory; the other is to suspend the droplet from a filament. Both cases have obvious drawbacks. Droplets in free fall are subjected to substantial forced

convection heat transfer, and the warping of the flame front is such that the flame more closely resembles a cylindrical diffusion flame, than a spherical diffusion flame.[2,5,17-22] The effect of forced convection on the chemical kinetics is unknown, and little is known about convection effects on physical and chemical properties, since there is a large fraction of the evaporating fuel moving upward and forming a conical flame front. Investigation of an upward moving droplet at the crest of its trajectory is restricted within narrow limits of experimental conditions, and at best, precise measurements are difficult to obtain.[12,20] Suspending droplets from filaments is the most popular technique, but the heat transfer to the droplet from its flame through the filament cannot be disregarded and is hard to evaluate.[23] The effects of natural convection on the burning rate of a stationary droplet are cumbersome to handle and definitely detract from the ability to study the application of the theoretical models of interest which assume spherical symmetry.[1,2,5,11,14,18,20,24] Natural convection can be eliminated by suspending a droplet on a filament in a freely falling chamber; this technique retains the disadvantages of the filament, however.

Observations as to the effect of ambient conditions on a burning droplet may be summarized as follows:

(a) Ambient pressure.

The burning rate of a fuel droplet is proportional to the nth power of the absolute pressure for pressure in excess of atmospheric pressures.[12,17] The value of "n" ranges from 0.2 to 0.6. Observations have been made on the combustion of a series of liquid organic hydroxy compounds and several heavy hydrocarbons at subatmospheric pressures.[14]

The steady state mass burning rate of a liquid sphere was found to go through a minimum as pressure is reduced. At subatmospheric pressures the change in burning rate is so modest, that for most purposes it can be assumed independent of pressure under free convection conditions.[14] As the pressure is lowered further a minimum value of pressure is apparently reached, for a particular droplet diameter, below which combustion cannot occur.[15]

(b) Ambient temperature.

Diffusion theory predicts an increase in burning rate with increasing ambient temperature. Data on burning rates for n-heptane and benzene burning in air have been taken for both high and low ambient temperatures.[17,25] Considerable doubt exists as to the validity of any conclusions drawn from these data, since they are very scattered. When compared with the predictions of the diffusion flame theory, only fair agreement exists.[17] The systems of cetane, n-heptane, and ethyl alcohol have also been studied at temperatures ranging from room temperature to 700°C.[23] Again agreement with any theory is difficult to discern because of scattered data.

Evaporation and burning rates have been studied for α-methylnaphthalene under various conditions of ambient temperature and droplet size.[26] In the same paper the effects of forced convection at elevated temperatures (355°C) and Reynolds numbers ranging from 9.0 to 32.9 were studied for a number of systems.

The combustion rates of freely falling drops of heptane, isooctane, and kerosene have been observed under conditions of elevated temperatures (1500°F).[19] Plots of diameter squared versus time show an agreement with the first power law. An attempt was also made to correlate the effects of

flame drag and heat transfer to the droplets falling through air at 1500°F, the results of which are not entirely conclusive.

Droplet burning has been studied by projecting a stream of droplets upward into a furnace.[20] Residence times of droplets in the furnace and degree of combustion were measured for a number of fuels at various furnace temperatures. All the experiments were conducted at atmospheric pressure and carried out in air. A correlation of $M^{2/3}$, where M is drop mass, versus residence time was proposed to display the effect of furnace temperatures on combustion. Here, as above, the experimenters were faced with a complicated heat transfer problem, which must be solved if the results of the observations are to be properly interpreted. The experimental approach contained inherent factors which increased the complexity of the calculations. The velocity of the droplet relative to the surrounding atmosphere was constantly changing and not directly controllable, and the atmosphere was not entirely isothermal.

(c) Ambient oxygen concentration.

The diffusion flame theory predicts an increase in evaporation constant with an increase in oxidizer concentration in the atmosphere surrounding a droplet. Transient combustion models predict a decrease in combustion time with increased oxidizer concentration.

The effect of increased oxygen concentration in an oxygen-nitrogen mixture has been observed for systems of n-heptane, ethyl alcohol, benzene, and toluene.[17] From a plot of diameter squared versus time, evaporation constants were evaluated experimentally and compared with theoretical values. In general, the comparison was good with good reproducibility (±1%). The droplets were suspended from filaments and burned at oxygen concentration ranging from 0.23 to 0.90 mole fraction.

It should be pointed out that the calculated values of evaporation constant were for conditions of no convection currents, and the experimental values were taken under conditions of natural convection, which increases the heat transfer and, as a result, also increases the evaporation constant considerably.[11]

Experiments on burning rate as a function of gas-phase concentration, carried out under steady state convective conditions (and Re≈2) with nitrogen as a diluent, show that the mass combustion rate of ethanol (95.5% b.w.) diminishes exponentially as the weight portion of gaseous oxygen is decreased.[5] Upon substitution of helium for nitrogen as the diluent in the gas stream, a pronounced increase in the burning rate was observed, suggesting the futility of carrying out experiments with these inert gases rather than actual combustion products.

3. Ignition: Theory and Experimental Observations

The theory of ignition was apparently first treated by D. A. Frank-Kamenetsky, who considered the relative rates of heat generation at the surface, heat loss to the surroundings, and diffusion of oxygen to the reaction zone, and showed that a critical ignition temperature can exist.[27] Other authors have varied this original treatment, at least one dealing with auto ignition.[28]

The experimental work in the area of ignition of fuel droplets centers primarily on the measurements of ignition lag. The ignition lag is considered as a succession of physical and chemical lag. In the combustion of liquid droplets, the chemical lag may be small when compared to the physical lag, but in fuel vapor/droplet systems, the physical and chemical lags must be considered separately, because they are different in nature. In the examination of ignition problems of fuel vapor/droplet

systems, the physical lag and chemical lag must be measured independently.

The literature contains a number of studies concerning the ignition of gases, and the effects of temperature, concentration, etc., on ignition lag.[29] In general, gases show the same decrease in ignition lag with increasing temperature as liquid/vapor systems and solid particle/gas systems.[30]

Observations of evaporation, auto-ignition mechanism, and burning of fuel droplets in air at various ambient temperatures have been correlated in such a way, as to predict droplet lifetime as a function of the "apparent droplet burning velocity coefficient".[25] "The apparent droplet burning velocity coefficient" is defined as the square of the initial droplet diameter divided by the life time of the droplet. The validity of this correlation depends on ignition lag; a large ignition lag tends to discredit the correlation. A further study of evaporation and ignition lag with droplets suspended from filaments shows an increase in ignition lag with increasing droplet diameter.[26] The effects of oxygen content on ignition lag were studied showing a marked effect on the time from beginning of evaporation to ignition. Both of these ignition lag studies[25,26] used similar apparatus, consisting of a furnace mounted on wheels and moved over a droplet suspended on a filament. The experiments were carried out at atmospheric pressure with temperatures ranging from 700°C to 800°C. A few experiments were performed at temperatures in excess of 800°C. The effect of oxygen concentration in the gas was investigated for cetane and α-methylnaphthalene at a furnace temperature of 680°C. The results showed a decrease in ignition lag times with increased oxygen concentration.[26] Ignition of two droplet arrays as a function of temperature were observed, but this part of the work was inconclusive.

The sequence of events leading to the detonation of a droplet combustion field have been studied, and the apparent similarity to detonation in premixed gases discussed.[31] The paper primarily describes the processes occurring in a heterogeneous system leading to detonation.

4. Need For Further Research

Most of the experimental studies have been conducted on fuel droplets burning under the influence of natural convection. All the theories, however, have assumed no convection and spherical symmetry. Further experimental work obviously will either focus on studying the effects of convection, or convection effects will be eliminated so that work on a spherical combustion model can be continued. The effect of natural convection can change the measured values of evaporation constant as much as 50%, and there is little more than conjecture on the effect of convection on the various other parameters of combustion.

Surveying the literature one sees a need for a series of rather elegant experiments in which droplet combustion, in strict spherical symmetry, is observed as a function of ambient temperature and of various oxygen concentrations, where the diluents are composed of combustion products. At best, experiments of this quality are difficult to undertake. Since some 26 variables need to be considered during a combustion reaction, any cleverly devised experiments, that determine the relative importance of any of these variables within an order of magnitude, will be a definite aid in the development of the theory. If, for example, the assumption of steady state combustion is proven valid for all fuels or a class of fuels, a greater faith in calculations based on steady state models would certainly be justified.

B. Discussion of the Problem

From the literature, one can see that a large amount of work has been done on the burning of liquid fuel droplets, while the investigation of droplet ignition has been somewhat ignored. The intent of this study is to introduce an experimental approach to continue the study of droplet ignition.

One of the similarities in the experimental work so far undertaken is the extrapolation of data taken in studying large drops to the behavior of small drops or droplets. Droplets are normally defined as liquid particles of the sizes commonly formed by fuel atomization techniques; these range from 10 to 300μ in diameter, with 1000μ being an extreme upper bound. Essentially all of the experimental work in combustion undertaken to date has been done with drops 1000μ in diameter or larger. The experimental investigation of droplet ignition has also been restricted to the study of relatively large drops, the aim being somewhat of an exploratory nature.[25,26]

Clearly the vaporization of liquid fuel is a prerequisite of ignition, which in turn precedes "steady combustion". It is not clear, however, that large and small drops behave in an identical manner in this succession of events. In fact, studies show that the vaporization laws for large drops must be corrected when applied to small droplets.[32,33]

The purpose of this study is to develop a research facility capable of producing single small droplets in a high temperature, stagnant, oxidizing atmosphere, in such manner, that the phenomenon leading to ignition can be observed under varying conditions of temperature, pressure, and atmospheric composition. Observations of the ignition process are to be made with a high-speed camera (Fastax), with film speeds appropriate to the particular ignition lag time of the droplet.

If further theoretical calculations are to be made, the experimental system must have reasonably well defined boundary conditions. This implies that the droplet should appear in the stagnant gas instantaneously, without disturbing the system. Such a condition is approached by developing an injection mechanism which forms a droplet quickly, relative to its ignition lag time.

II. EXPERIMENTAL DESIGN

A. General Considerations

In any system which employs the heterogeneous combustion of liquid fuels, the controlling process or processes need to be determined and studied. There is no assurance, of course, that the controlling process will be the same in high temperature applications as in relatively low temperature applications. A number of phenomena can have important effects on the design and performance of any combustion system and should be systematically considered. Some of these phenomena are: droplet formation, vaporization, heat and mass transfer, and gas phase reactions.

This study is concerned with the initial stage of the gas phase reaction just preceding well developed combustion. For the purpose of photographic observation, a well developed flame can be arbitrarily defined to begin at the moment the entire droplet is surrounded by a high temperature reaction front or flame. Similarly, the ignition process can be defined as all the phenomena that take place in the gas phase immediately surrounding the droplet during the time a well developed flame front is being formed. The elapsed time between production of a droplet and the formation of a well developed combustion flame has been termed the ignition lag time--obviously a combination of physical and chemical processes.

In evaluating a particular combustion system employing heterogeneous combustion, it is of practical interest to know under what operating conditions the ignition phenomenon is important. This study develops an experimental apparatus to evaluate ignition lag time for droplet vapor systems simulating actual operating conditions.

After a droplet is formed, it immediately begins to vaporize while it is being carried downstream by the bulk gas. At some point the atmosphere immediately surrounding the droplet initiates and supports a high temperature chemical reaction and the droplet begins to burn. If the concentration of fuel vapor in the bulk gas is too lean to ignite, then ignition will take place in the immediate vicinity of the droplet. Since the evaporating droplet constitutes a mass source and a heat sink, it maintains in its immediate neighborhood a region of steep gradients. The work of Kobazasi[25] indicates that it is within this region the (photographically) observable ignition takes place. Thus, the fact that the droplet is being carried by the bulk gas will have little effect on the final stage (chemical lag) of the ignition phenomenon. The initial heating-up time or physical ignition lag of a fuel droplet, which ostensibly can be affected by the convection effects of the gas stream, has been studied by Prien, Borman, Wakil, Mayers, and Uyekara;[34] they define physical ignition delay as the time required to produce a stoichiometric mixture of fuel and oxidizing gas in the neighborhood of the droplet. The conclusions of these authors imply that, for volatile fuels evaporating in high temperature environments, the physical ignition delay time of single droplets is relatively short. For example, from these authors' calculations, the physical ignition delay time of a .500μ (micron) diameter, n-decane droplet, evaporating in air at 1200°R and flowing at a relative velocity of 100 inches per second, is 0.073 seconds. It was assumed that ignition took place instantaneously when the stoichiometric mixture of fuel and air reached reported ignition temperatures of pre-mixed gases, and that heat transfer by radiation was negligible.

Apparently, then, a reasonable simulation of the ignition conditions of droplets for the purpose of observing the overall ignition phenomena can be attained by forming the droplet in a high temperature, stagnant, gaseous environments.

The goal of this study is to design a research facility for photographical observation of the ignition of single droplets in a stagnant atmosphere under conditions of widely varying parameters, such as:

(a) Pressure ranging from less than 1 atmosphere to 10 atmospheres.

(b) Temperature from 20°C to 1500°C.

(c) Droplet size from 100 to 600 microns in diameter.

(d) Any desired gas composition.

The apparatus should be designed so that the droplet can be suddenly introduced into predetermined and well defined surroundings and ignition lag times can be measured with a high speed (Fastax) camera. The design of the apparatus has three major facets: production and control of the experimental environment, droplet formation, and photographic observation.

B. Production and Control of the Experimental Environment

The first consideration is the development of a satisfactory test chamber in which the experiment takes place. The test chamber or crucible should be able to contain a homogeneous mixture of hot (1500°C) gases and the inner walls should be at an uniform temperature with a relatively low emissivity (comparable to that of burning gases). The crucible must be large enough so that the percentage of inner surface area occupied by the necessary view ports and tubes will be small (less than 1%). Its size is also determined somewhat by the availability of high temperature ceramic vessels. A satisfactory and easily available

size for the crucible is a small cast alumina cylinder, 10 cm. in diameter by 10 cm. in length. Alumina (Al_2O_3) has adequate thermal properties for use in high temperature vessels and has a low emissivity. The emissivity of alumina is about 0.3; that of burning gases is of the order of 0.1.

To simultaneously produce elevated pressures (10 atmospheres) and high temperatures, it is necessary to surround the test chamber with an adequate layer of high temperature insulation and a pressure vessel. Then, at elevated pressure, the insulation, as well as the test chamber, is at uniform pressure and no stresses due to pressure difference are applied to the hot ceramic crucible. The connections between the crucible and pressure vessel consist of power leads, thermocouple leads, viewing tubes, tubes for controlling the gas composition in the test chamber, and a tube for allowing the entrance of the droplet forming device. The windows in the pressure vessel must be cooled with a water jacket, since they are directly exposed to thermal radiation from the test chamber and are connected to the test chamber by material of relatively high conductivity.

The pressure vessel should be located as close to the test chamber as possible to minimize the problems of photography and droplet formation. From knowledge of the crucible size, insulation, and material of the pressure vessel, the heat losses from the outside of the pressure vessel by natural convection at the highest crucible operating temperature can be calculated; these calculations determine the wall temperature of the pressure vessel as a function of distance from the outside wall of the crucible--hence, determine the minimum size of the pressure vessel which can operate with a prescribed maximum wall temperature (300°C). The pressure vessel is then a cylinder about 14 in. in diameter by 14 in. in

length, and the heat losses are about 154 watts when the system is operating at a steady state crucible temperature of 1500°C.

The heat losses determine the minimum power requirements for steady state operation. However, to reduce the time required to heat the system up to the steady state temperature, two or three times the minimum power requirements should be used for design criteria. The minimum heat-up time is determined by the maximum thermal shock that can be tolerated by the system. In this study the system is relatively sensitive to thermal shock because the alumina crucible is fitted with alumina observation tubes whose one end remains at the pressure vessel wall temperature and the other end at the crucible temperature. Normally, cast alumina can be heated uniformally at a rate of about 200°C per hour; in this case a maximum rate of 100°C per hour is used.

C. Droplet Formation

In any experimental investigation the experiment should have well defined boundary conditions. If experimental studies of droplet ignition are to have any meaning at all, it is particularly important to know the exact nature of the environment surrounding the droplet from the time of droplet formation until ignition takes place. In earlier work, a relatively large drop was placed on the end of a filament and a furnace rolled around it. Since ignition lag times which have been reported are of the order of 0.10 seconds, presumably the droplet spends a significant portion of the ignition lag time traveling through a gaseous atmosphere of widely varying temperature, and the reported ignition lag times are high.

The droplet formation technique of this study is an improvement on the method of introducing the droplet into the high temperature environment.

Ideally, of course, the droplet would be formed instantaneously in the gas with perfect spherical symmetry. Here the droplet is formed on the end of a fine hollow filament after the filament has been placed in the experimental position. To form a droplet in such a manner, a mechanical device is necessary (droplet injector) with the specific purpose of forming the droplet in a high temperature oxidizing environment with minimum disturbance, and holding it until ignition takes place. The salient features of the injection process consist of moving the injection mechanism into position for the experiment and forming a droplet of predetermined size on the end of the hollow filament, so that the time of droplet formation is small when compared to the ignition lag time.

The basic requirement is to provide a means of forming a droplet of 100 to 600μ in diameter at the end of the filament mentioned above. This can be done by employing a piston to compress a volume of liquid fuel just enough for the fuel to expand through the filament and quickly form the desired size droplet without forming a liquid jet. A simple mathematical model of the postulated droplet formation process has been developed to gain some insight into the problems of controlling the flow of small amounts of liquid (volumes of the order 5×10^{-7} cm.^{3}) in hollow filaments or capillaries and is presented in Appendix A. The results of the calculations indicate that the rate of the droplet growth follows an exponential decay and has a time constant associated with it. The time constant is a function of the design of the droplet formation mechanism and the compressibility of the liquid used and, with the proper mechanical design, can be made as small as desired, relative to the expected ignition lag times. The calculations in Appendix A also show that uncontrolled leakage past the piston can result in no droplet forma-

tion at all. Therefore, the piston must be very small in diameter and fit as closely as possible in its cylinder. However, if leakage were controlled, the droplet of desired size could be made as quickly as desired: the piston would compress more of the liquid than needed to form the droplet, with the excess being bled off via an adjustable valve. The injector here is constructed to minimize all leakage except the flow that forms the droplet. Accordingly, the piston is about as small (0.028 in.) as can be fitted (lapped) in a cylinder with a maximum clearance of 0.0001 in., and still allow the piston to move evenly without requiring a very large driving mechanism.

Since the droplet injector is intended to control the formation of droplets ranging over two orders of magnitude in volume, and since a simple analysis indicates that a very small piston should be used, the injector must be designed with a variable liquid volume in order to control the rate of droplet growth-- i.e., to control the time constant associated with droplet growth. Thus, any particular droplet size required must have associated with it a special filament, covering a minimum of the droplet surface and having the proper chamber size which allows the droplet to be formed in the prescribed time.

If the percentage of surface area of the droplet covered by the filament is not to exceed 10%, the allowable filament outside diameter is 0.4 times the droplet diameter. The relation between outside diameter and inside diameter of drawn filaments remains nearly the same as that of the tubing used-- that is, the ratio of outside diameter to inside diameter remains nearly constant. For a droplet of 400μ diameter, a hollow filament should be drawn with outside diameter of about 160μ. Hollow filaments with outside diameters as small as 10μ can be constructed.

Since ignition lag times are expected to be the order of 0.5 seconds, a desirable time constant of droplet formation would be the order of 0.01 seconds, which can be attained by adjusting the chamber volume as mentioned above. According to the model developed in Appendix A, an approximate chamber volume of 0.6 $cm.^3$ will be required to form a 400μ droplet on the end of a 160μ filament with a time constant of 0.01 seconds.

D. Photographic Observation

Measurement of the rate of droplet formation, droplet size, and ignition lag times can be made with the use of a high speed motion picture camera. However, in making photographic measurements, a number of interacting effects must be balanced, such as: resolution, frame rate, magnification, depth of field, and illumination.

To make the experimental measurements mentioned above, the camera should be equipped with a time marking device which can record the instant the experiment is initiated. The blips should be recorded on the film at a frequency appropriate to the particular frame rate used; expected frame rates are the order of 1000 frames per second.

When the film is developed and projected on a screen, the experimental measurements can be taken-- that is, measurement of droplet diameter relative to a known filament diameter, measurement of the time to form the droplet, and the total ignition lag time. The accuracy of these measurements depends on the resolving power of the film--particularly in the case of small droplets, and upon the object to image magnification attainable. If a film with a resolution of 100 lines per millimeter is used to photograph a 100μ diameter droplet at an object magnification of 1:1, the measurement of the diameter of the droplet can be 20% in error.

Since the accuracy of measurement depends only on the resolving power of the film, a 100μ diameter droplet must be photographed at magnifications greater than 1:1 in order to decrease the error in measurement. Thus, a droplet less than 200μ in diameter must be photographed at a magnification greater than 1:1 if an error of less than 10% is to be obtained in the measuring of the diameter. As magnification is increased by using extension tubes or auxiliary lenses, the light requirements rapidly become very large at a particular frame rate, and the depth of field decreases. Depth of field is a function of lens focal length and "f" number,* object distance, and circle of confusion. Generally, depth of field is roughly inversely proportional to magnification and directly proportional to the square of the "f" number.

To develop a method of photographing the droplet, the various parameters which are fixed by the nature of the experiment and those which are adjustable need to be evaluated. Fixed parameters are film speed of 125 (ASA units), resolution of film (100 lines/mm.), resolving power of the lens (about 300 lines/mm.), minimum object distance of 7 in., and minimum frame rate. At any particular film speed, an increase in frame rate requires an increase in illumination or a decrease in magnification.

The resolving power of the film limits the accuracy of measurements obtained from the film to about 100 lines per millimeter, while the

---

* "f" number is equal to the equivalent focal length of the lens, divided by the diameter of the inner pupil.

optimization of illumination, film speed, frame rate, and necessary depth of field limit the magnification at the time of exposure or object magnification. To obtain the largest object magnification, the various parameters are adjusted to maximize the possible magnification while still remaining within the limits set by the nature of the experiment. For example, if the expected ignition lag time of a 200μ diameter droplet is 0.5 seconds, the frame rate could not be much less than 100 frames per second, and the depth of field should be at least 100μ for critical focusing. For a magnification of 1:1, the necessary subject brightness is about 10,400 lumens per square foot, and the depth of field is about 200μ; magnification of 5:1 and a depth of field of 100μ requires 2×10^5 lumens per square foot; and, a magnification of 10:1 with a depth of field of 100μ requires over 10^6 lumens per square foot.*

When using incandescent light sources, a basic procedure is to light from the sides of the object. In the experimental apparatus two high intensity focusing spotlights are used, capable of an output of 1.7×10^5 foot-candles or about 5.3×10^5 lumens per square foot each. This should yield sufficient light to photograph the 200μ diameter droplet discussed above at magnifications between 1 and 5.

---

* A source having an area of 1 sq. cm. will radiate π B lm., where B is the brightness in candles per sq. cm.

III. EXPERIMENTAL APPARATUS

The experimental apparatus has been constructed so that a liquid droplet can be suddenly introduced into a predetermined, high temperature, gaseous atmosphere. The apparatus incorporates a high speed camera which is used in making experimental observations. The apparatus in seen in Figs. 1 and 2 as a cylindrical pressure vessel mounted at the end of a table, two spotlights focused on the viewports at either side of the vessel, and, at the third view port, a camera mounted on a lathe bed. A crucible is located within the pressure vessel as seen in Fig. 6. Figure 1 also shows the droplet injector positioned at the top of the pressure vessel as it is during the injection process. The entire injector is shown in Fig. 3.

The pressure vessel is equipped with view ports, electrical terminals, and means of introducing the experiment and controlling the gas composition. The view ports in the wall of the pressure vessel are constructed 3/4 in. in diameter with 1/4 in. thick quartz windows, and are mounted in a water cooled base, consisting of a 1-1/2 in. diameter rod welded to the pressure vessel. The rod is counter bored to a diameter of 1-1/4 in., with a 3/4 in. diameter bored through the wall of the pressure vessel. The quartz windows seat on soft rubber gaskets in the counter bore and are secured by a drilled 1-1/2 in. cap which screws on the outside of the mount (Fig. 4). Thermocouple and power leads pass through the pressure vessel using Conax "Packing Glands" and Conax "Electrical Conductor Sealing Glands".* Two small pipe couplings (1/4 in. pipe) are

---

* Conax Corporation, Buffalo, New York.

welded to the side of the pressure vessel and are connected to two ceramic tubes (1/8 inches outside diameter) leading to the test chamber. The connections consist of allowing the ceramic tubes to rest loosely in the pipe couplings. The ceramic tubes are used for control of gas composition and pressure regulation. The bolted flat head on top of the pressure vessel is drilled and fitted with a smaller, flat head, through which the injector enters.

The dimensions of the pressure vessel, as determined by heat transfer calcuations, can be seen in Fig. 5. Calculations were made using a maximum pressure vessel wall temperature of 300°C. The pressure vessel is a cylindrical stainless steel vessel, 14-1/4 inches in diameter by 14-1/4 inches in length, with a wall thickness of 1/8 inches. To determine the thickness of the materials required, the formulas of the A.S.M.E. code for unfired pressure vessels were used. These calculations are presented in Appendix B.

The test chamber or crucible lies within the stainless steel pressure vessel, separated from the pressure vessel by a minimum layer of high-temperature Fiberfrax ceramic insulation,** as shown in Figs. 4 and 6. An alumina cylinder, 10 cm. in diameter by 10 cm. in length, is the experimental chamber. This is a convenient, readily available size.*** The alumina test chamber is positioned in the pressure vessel by the ceramic viewing tubes, and rests on another alumina cylinder which has open ends. The crucible and its related tubes are constructed from 99.99% aluminum oxide. Three tubes are used for photographic purposes

---

** Carborundum Co., Los Angeles, California.

*** Morganite Inc., Long Island, New York.

and two small ones (1/8 in. outside diameter) for control of gas composition and pressure (Figs. 4 and 5). The entire outer surface of the crucible is covered with an uniform winding electrical heating wire (25 ft. of 90% Pt., 10% Rd. wire, 0.020 in. in diameter) which produce a maximum of 1300 watts at 120 volts with a resistance of 7.8 ohms at room temperature. The power is supplied by a Thermac Meter Controller (Model MPR 7822), which is a voltage controlling device using a proportional controller for temperature regulation. Temperature measurements are made with 0.020 in. diameter, 90% Pt., 10% Rd. thermocouples, located in the gas of the test chamber and in the walls of the crucible (Figs. 4 and 6).

The experimental apparatus (Figs. 1 and 2) includes a 16 mm. Wollensak fastax camera (100 ft. film capacity, Model WF17), capable of operating from less than 100 to 8000 frames per second. The camera is mounted on a 42 in. lathe bed with the accompanying saddle modified to accommodate the camera. The lathe ways are mounted on four movable legs capable of fine vertical adjustment. The lathe ways add an effective mass to the camera and help to inhibit the mechanical vibration of the apparatus. For photographic accuracy, as discussed in Section II, it is imperative that the apparatus be free of low frequency vibrations. Focusing adjustments are made by sliding the saddle by hand. The camera is equipped with a cycle generator and flashing timing lights, which record timing marks on the film and, in addition, an event mark at the instant the experiment is initiated. The lens arrangements include the use of extension tubes to 5-1/2 inches and auxiliary lenses, as seen in Figs. 1 and 2, depending on the particular magnification desired. For magnification of about 1:1, extension tubes are adequate; magnifications greater

than 1:1 are accomplished by using an auxiliary lens with a long focal length (about 15 cm.) to bring the image out of the pressure vessel, and a camera lens with a short focal length to magnify the image on the film.

The photographic arrangement also includes two Wollensak Fastlites (1000 watt photo spotlights), each rated at 170,000 foot candles at 3 feet. A spherical mirror behind the lamps projects an image of the filament, which can be focused on the subject by adjusting the position of the lamp. The Fastlites illuminate the experiment from both sides, while the camera operates at the third view port of the pressure vessel. The pressure vessel is designed to rotate 90°; hence, back lighting is also possible.

The droplet injector has a 0.028 inch piston tightly fitted in a stainless steel sleeve (clearance 0.0001 in.), which is mounted on a brass body (Figs. 7 and 8). The piston is driven by a Ledex Rotary solenoid* connected to a fine threaded screw (72 threads per inch), (Fig. 7). When the solenoid is activated, the maximum turn is 95°, the minimum about 6°. After each activation, the solenoid is set by hand for the next step. Sample design calculations using the equations derived from the model presented in Appendix A are included in Appendix C. The filaments are constructed from quartz tubing, one end pulled to a fine hollow filament and the other attached to a ground joint, which in turn fits into the brass body holding the piston and driving mechanism (Figs. 7 and 8). The liquid volume is determined primarily by the volume of the ground joint and, hence, readily controlled by packing

---

* Ledex Inc., Dayton 2, Ohio.

with glass beads.

The injector, as shown in Fig. 3, is mounted on the end of a shaft which moves in a vertical direction. The shaft is fitted with bearings and is mounted in a tube. The bearings allow the shaft to travel vertically with no horizontal movement. The lowering mechanism is positioned directly over the opening in the top of the pressure vessel through which the filament enters. Vertical movement of the injector is controlled by raising and lowering the shaft mechanically or by hand.

IV. EXPERIMENTAL PROCEDURE

The experimental procedure discussed in this section is generally applicable to all the experiments on droplet ignition that the apparatus is designed for. However, this discussion applies in particular to experiments where ignition lag times are recorded at atmospheric pressure, and where droplet size, temperature, and fuel are the variable parameters.

After determining the particular size droplet to be studied, the magnification required for sufficiently accurate measurements is obtained by installing the proper lens or lenses in the camera, with the accompanying extension tubes, choosing the method of lighting--i.e., back lighting or side lighting, and mounting the camera on the saddle as shown in Figs. 1 and 2. The position of the saddle is then adjusted so that the camera is approximately focused on the plane where the droplet will be formed.

Next, the appropriate size quartz filament is chosen (droplet diameter about 2.5 times filament diameter) and filled with liquid fuel. The filament and injector body (Fig. 7) are then placed in a container of liquid fuel and boiled for approximately 15 minutes to eliminate dissolved air from the fuel and absorbed air from the metal and glass parts. After boiling, the liquid is allowed to cool to room temperature, and the filament and injector body are assembled beneath the surface of the liquid. Assembly of the injector is completed after removing the filament and body from the liquid. It is important that the filaments are free from dust particles and that they are of the proper dimensions.

Once the injector is assembled, it is mounted on the lowering shaft and lowered so that the filament enters the test chamber in the exact position for droplet formation. With the injector in this position, the

camera is focused on the end of the filament. The filament is illuminated for the focusing operation exactly as it is for the actual photography.

After the camera is focused, the injector is placed in the raised position just above the top of the pressure vessel, and the solenoid adjustment is set for the desired size droplet. The adjustment consists of rotating the solenoid some fraction of its total turn (95°), thereby determining the remaining turn, which is the piston travel upon activation.

The crucible or test chamber is then heated to the desired temperature and filled with gas of the desired composition. The heating is initiated by setting the Thermac Power Regulator to manual position, and, after turning on cooling water to the view ports, applying no more than 10 volts to the coils of the crucible. The power is increased in increments of 5 to 10 volts, so that the crucible is heated at a rate of 100°C per hour for the first 3 hours, or 300°C. Thereafter the heating rate is increased to 200°C per hour. After the crucible reaches the desired temperature, the power regulator is switched to automatic control without allowing current surges to be applied to the crucible. The gas is introduced into the apparatus through the pipes provided for it. As soon as the apparatus is filled, the flow rate is reduced to and maintained at a very low level .

The experiment is begun by loading the camera with 931-A DuPont rapid reversal film and setting the power for the camera speed desired. The lights are adjusted to high power and the camera is turned on. While two seconds elapse, the injector is lowered to the pre-focused position, and the solenoid is activated. When the camera stops, the injector is again placed in the raised position.

The injector has the capacity to repeat the same experiment many

times with varying droplet sizes by successive readjustment of the solenoid. However, the droplet size must remain within the range allowed by the particular filament in use, since changing the filament requires the injector to be disassembled and boiled in the manner discussed above. For experiments at elevated pressures, the injector will have to be modified, so that the filament can remain in the test chamber for several mintues. This would eliminate raising and lowering the injector mechanism.

V. EQUIPMENT TEST AND DISCUSSION

The experimental equipment has been tested to determine the success of the design calculations and the feasibility of obtaining measurements under the conditions outlined in Sec. II -- that is, ignition lag times of 100 to 500μ diameter droplets in a high temperature, oxidizing environment.

The empty pressure vessel was hydrostatically tested to 150 psig by Lawrence Radiation Laboratory technicians. A small amount of leakage was discovered at the threads of the window mounts, which will not affect the high pressure functions, but will limit the lowest pressure (reduced pressure) attainable.

The thermal characteristics of the crucible and pressure vessel were tested using air and one atmosphere pressure in the apparatus. Power was supplied to the crucible in ten volt increments. The rate of power increase was determined by the rate of temperature rise. The crucible was heated at a rate of 100°C per hour for 3 hours; then the rate was increased to 200°C per hour. The test chamber attained a maximum steady state temperature of 1500°C at a line voltage of 125 volts. The temperature distribution over the inside of the crucible was checked visually by observation through the view ports and by thermocouple measurements. When the crucible was operating with wall temperatures in the range of 700 to 1500°C, no color variations over the inner wall surface could be discerned. At steady state operation (1500°C), the thermocouples imbedded in the wall of the crucible recorded the same temperatures ±5°C. The thermocouples positioned in the gas of the test chamber also recorded similar temperatures, ±5°C. The difference between the average temperature recorded in the wall and the average temperature in the gas was 10°C, average wall temperature being higher.

With a steady state crucible temperature of 1500°C, the pressure vessel wall temperature remained below 100°C in the neighborhood of the windows, and about 120°C in the areas of the pressure shell remote from the cooling coils located around the view ports. The quartz windows remained cool (about 40-50°C). Temperature measurements were made on a diameter across the surface of the windows by placing a thermocouple against the glass. The measurable temperature gradient across the diameter was relatively flat. This indicates that larger diameter windows could be used with corresponding thicker glass, and the pressure vessel could be made smaller in relation to the existing crucible without additional outside cooling. If outside cooling were used over the whole surface of the pressure vessel, the minimum size of the pressure vessel will be determined by the maximum power provided by the Thermac Power Regulator. Maximum power attainable with the existing crucible windings is about 4800 watts.

While mounted outside of the test chamber, the injector was subjected to a series of tests using distilled water. These tests were conducted in order to determine the best method of sealing the filament into the injector, and to evaluate the shape of the droplet forming on the end of the filament and its rate of growth. The injector was prepared according to the procedure described in Sec. IV. Copper, teflon, and neoprene o-ring gaskets were used at the filament injector body interface (Fig. 8). The solenoid was activated several times with each type of gasket installed, and the droplet growth rates were observed with the fastax camera. The gaskets were evaluated according to the time of droplet formation (slow forming droplets indicating presence of air in the injector) and the size of a droplet formed with a known piston stroke (droplets smaller than expected indicating liquid leakage past the gasket). Teflon and neoprene performed equally well with

no apparent leakage; copper gaskets did not provide a valid liquid seal and were unsatisfactory. Droplets had a tendency to creep up the outside of the filament while being formed. Therefore, the ends of the filament, where the droplet forms, were fire polished, and the outer wall coated with a silicone product (General Electric SC-87 Dri-Film) in order to limit the wetting of the outside surface of the filament. Subsequent photographs showed the droplet forming and being suspended at the bottom of the filament in the desired manner.

This series of tests on droplet formation also included droplet growth rate measurements taken with the fastax camera under conditions of adequate lighting--that is, lighting adjusted for satisfactory pictures. The results show that droplets in the range of 150μ to 500μ in diameter were formed when the proper size filaments were used (as discussed in Sec. II) in periods of the order of 0.01 seconds.

Photographs of droplets forming in the test chamber under ambient conditions have been taken to evaluate different lighting arrangements and the possible magnification attainable. The tests were performed according to the experimental procedure presented in Sec. IV (excluding the section on high temperature production). Side lighting proved to be unsatisfactory (underexposure) with lights rated at 5.5×10^4 foot candles at 18 inches and for object to image magnification of 1:1. Camera speeds of 500 frames per second were used. Since this test, focusing spotlights rated at 1.7×10^5 foot candles at 3 feet have been obtained, which should provide sufficient side illumination for camera speed of about 500 frames per second, with at least 1:1 object to image magnification. An increase in the diameter of the view ports in the pressure vessel by 1/2 to 3/4 inches would greatly increase the incident illumination at the object,

since the photographic spotlight can focus to a diameter of 2 inches. Tests made with back lighting, using one photo spotlight, rated at 1.7×10^5 foot candles at 3 feet, provided adequate photographs of droplet formation over a wide range of conditions. The light was focused to a 2-inch diameter radius on the view port window in the pressure vessel. The distance from the light filament to the droplet was about 3 feet. At 1:1 magnification, satisfactory pictures were obtained with the lens aperture fully stopped (f/16) at a frame rate of 1000 frames per second. At f/4.5 and f/11 and 1000 frames per second, the film was overexposed. With the lens stopped to f/16 and a frame rate of 500 frames per second, the result was again overexposure. This indicates that with back lighting, the maximum object to image magnification attainable will be somewhat greater than 1:1.

By following the general procedure discussed in Sec. IV, the growth rate of a 400μ diameter heptane droplet forming in the test chamber on a 140μ outside diameter quartz filament under ambient conditions was observed using the high speed camera. The droplet was photographed at an object to image magnification of 1:1 and at a camera speed of 1000 frames per second. The lens was stopped at f/16, and back lighting was used with one high intensity photo spotlight focused on the window of the pressure vessel. The distance between the light filament and droplet was approximately 3 feet. The results of the test, as seen in Fig. 9, show the 400μ diameter droplet forming in 0.020 seconds.

The rate of droplet growth is about 30% faster than predicted in Part A of Appendix A, indicating some leakage around the piston. Leakage past the piston limits the minimum size droplet which can be formed by the injector to about 150μ in diameter; this indicates the need of a larger piston with a bleeding device (as mentioned in Appendix A, Part B)

if droplets smaller than 150μ are to be formed.

The fastax camera functioned satisfactorily during all these tests with no discernible vibration when mounted on the lathe bed. When the films were projected on a screen, the filament image remained stationary. The timing and event markings on the film were easily recognized during test runs and yield the necessary information. Focusing operations were readily accomplished by moving the camera on the ways.

During the last test described, the lowering device for the injector returned the prefocused filament to the original position in the test chamber. However, adjustment and mounting of the injector on the moving rod and deaccelerating of the injector were difficult. The adjustment and mounting difficulties can be surmounted by machining the parts of the mechanism to close tolerances and eliminating the play in the system. Means for deaccelerating the injector have not been tested, however.

For experiments undertaken with elevated pressures, the injector will be required to remain in the test chamber for an extended period of time for establishment of equilibrium. Hence, a cooling of the filament will be required. One possible method of cooling is to establish a cooling jacket around the filament. This could be another quartz tube mounted around the filament, with the space between the outside wall of the filament and the inside wall of the outer tube filled with a cooling fluid. For high pressure use, the injector would remain in the test chamber for several minutes before activation. Thus, a small portion of the liquid located in the end of the filament would probably vaporize, requiring the injector to be purged before a droplet was formed. To allow for the purging operation, the injector can be modified so that after each activation of the solenoid, a return spring and ratchet mechanism will enable successive droplets to be formed without resetting the injector by hand.

VI. CONCLUSIONS

The experimental apparatus was designed to obtain the measurement of ignition lag times of liquid fuel droplets under conditions of high temperature (to 1500°C) and pressure from less than 1 to 10 atmospheres, in a gaseous environment of variable composition. The design included the use of a high speed movie camera for making experimental observations and measurements. The apparatus provides a method of introducing the droplet into the oxidizing atmosphere by quickly forming the droplet on the end of a hollow filament in the uniformally preheated experimental environment. The experimental apparatus is capable of withstanding 150 p.s.i.g. internal pressure and providing uniform temperatures in the test chamber to 1500°C with maximum outside wall temperature less than 120°C.

The equipment tests determined that small droplets (100μ to 500μ in diameter) can be formed and photographed in the test chamber. Droplets can be formed in times of the order of 0.01 seconds with the injecting device. To form droplets with diameters less than 100μ, the injector should be modified to incorporate a longer piston stroke and a device for controlling liquid bleed-off from the injector chamber. Droplets have not been formed successfully with the apparatus operating at high temperature, because of excessive evaporation of the liquid in the filament. Although a lowering device such as that described in Section III might be used with the injector to overcome this difficulty, again some serious problems would arise, such as: the lowering of the filament to a prefocused position and the provision for deaccelerating the injector without excessive filament vibration. A more satisfactory solution would be to eliminate the need for lowering the injector altogether--

an obvious necessity in the case of elevated pressures. This might be accomplished by equipping the quartz filaments with cooling jackets and providing the injection mechanism with a means of forming successive droplets. A rachet mechanism would allow successive solenoid activation without intermediate hand settings, thus enabling the injector to be purged of any evaporated fuel before the actual experiment.

With the present apparatus, high speed photographs (order of 1000 frames per second) of droplets (150μ to 500μ in diameter) formed in the test chamber have been made with back lighting at object to image magnification in excess of 1:1. Since the droplets were not formed in a high temperature environment, there is no evidence that the ignition phenomena (flame fronts) can be observed using back lighting. From first principles, ignition phenomena observations are reasonably assured with side lighting. The problems of object to image magnification and incident object illumination in the case of side lighting can be alleviated to some degree by constructing a smaller pressure vessel with larger view ports around the present test chamber.

In addition to ignition lag measurements, other experiments germane to the study of droplet ignition could be made with the apparatus in its present condition, or with minor modifications. High temperature transient and steady state droplet evaporation experiments could be undertaken if the gas in the test chamber is inert or the liquid vapor in nonreactive.

The apparatus was specifically designed and constructed to duplicate the experiments outlined in Section II. However, some mechanical problems remain to be solved before all the experiments can be performed. The principal requirement is the modification of the injector so that it can remain in the high temperature environment for periods of several

minutes, and so that it can form successive droplets while in place. Other beneficial modifications to the apparatus would be the enlargement of the view ports and the reduction in pressure vessel size. These modifications would aid in obtaining better photographic observations, but are not a necessity for carrying out experiments.

ACKNOWLEDGEMENTS

This work was done under the auspices of the United States Atomic Energy Commission.

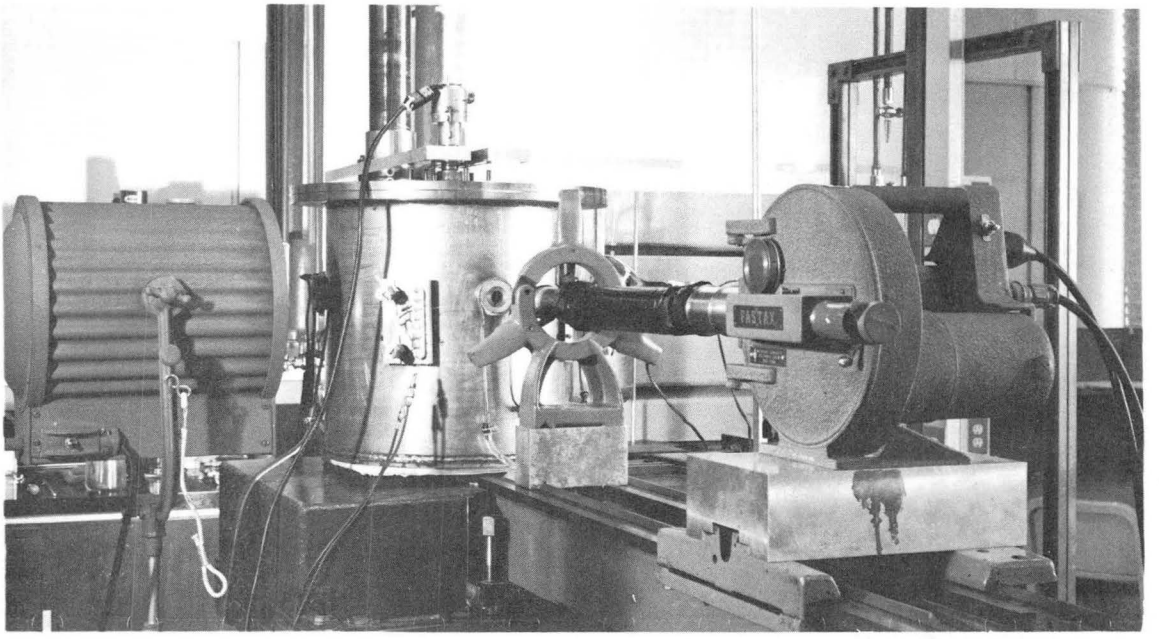

ZN-5285

Fig. 1

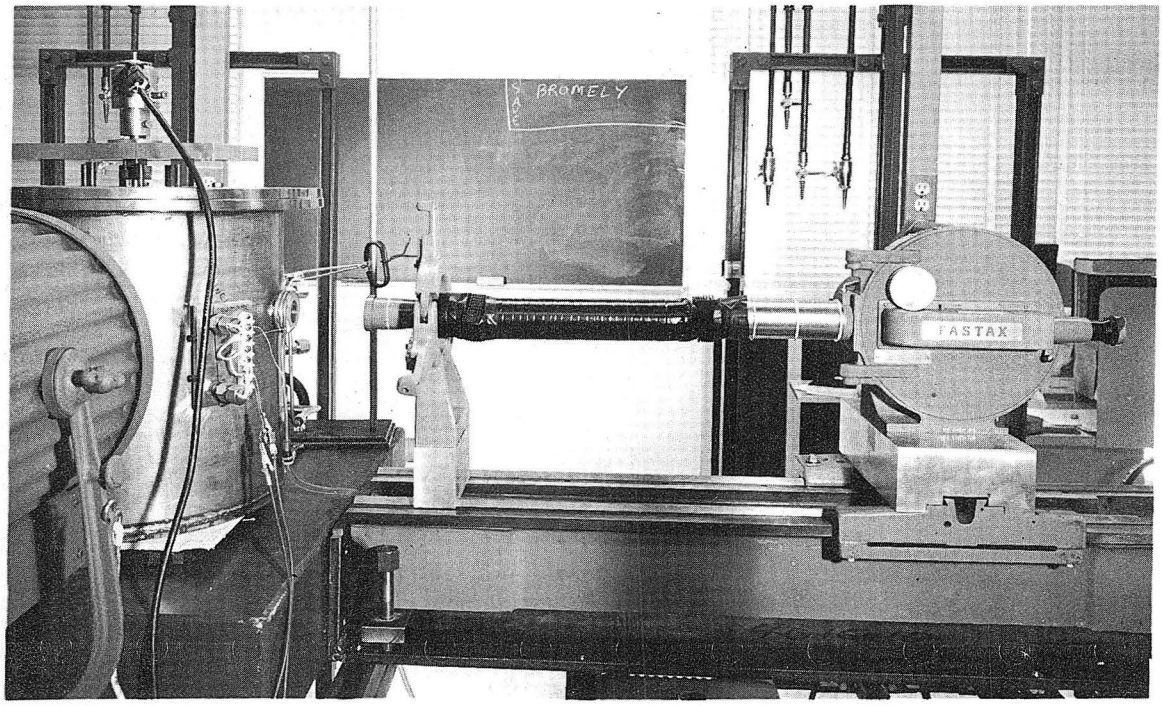

ZN-5284

Fig. 2

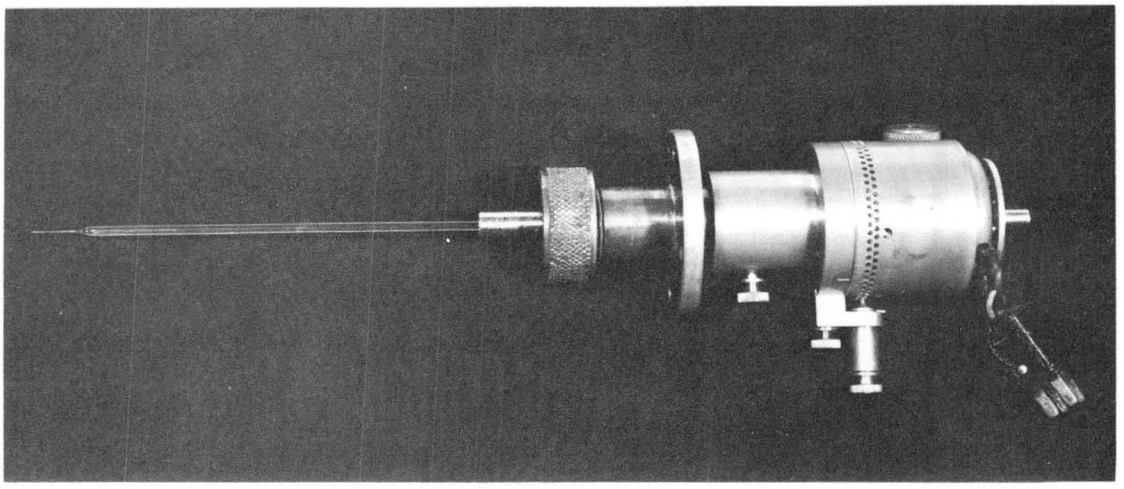

ZN-5283

Fig. 3

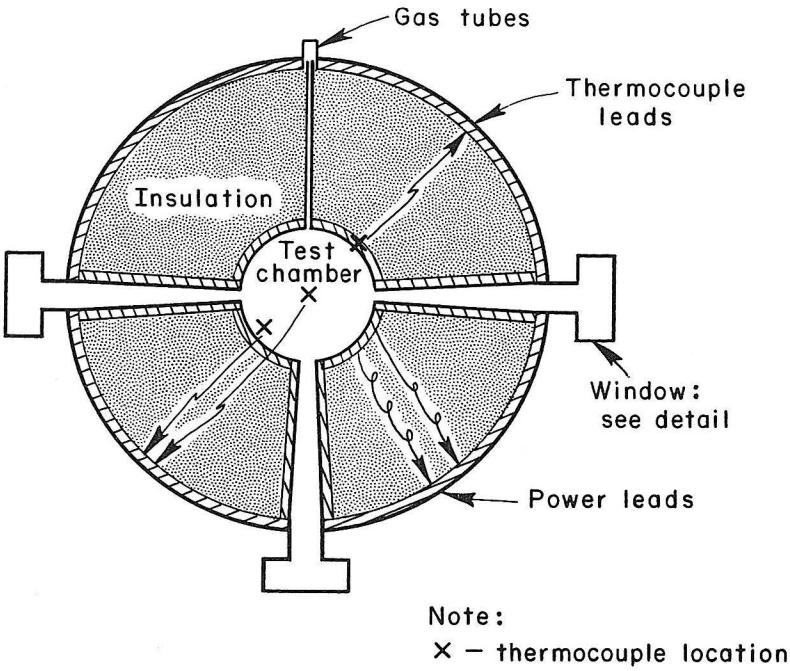

Window detail

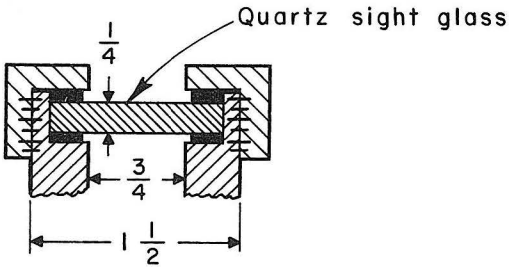

MU-36787

Fig. 4

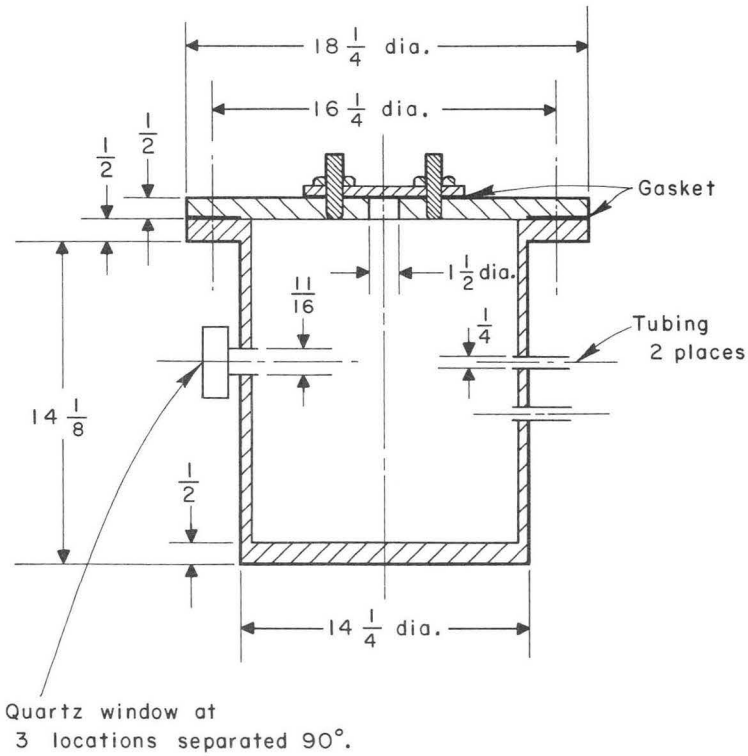

MU-36788

Fig. 5

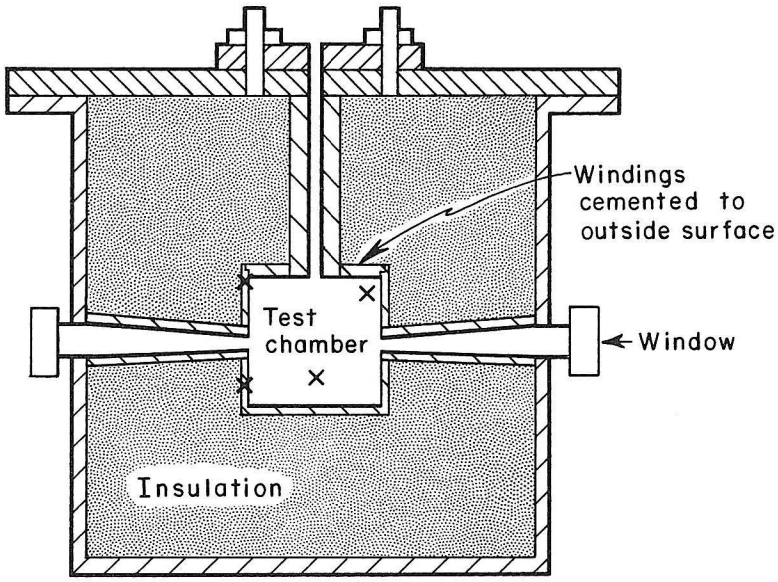

Note:

× – thermocouple location

MU-36789

Fig. 6

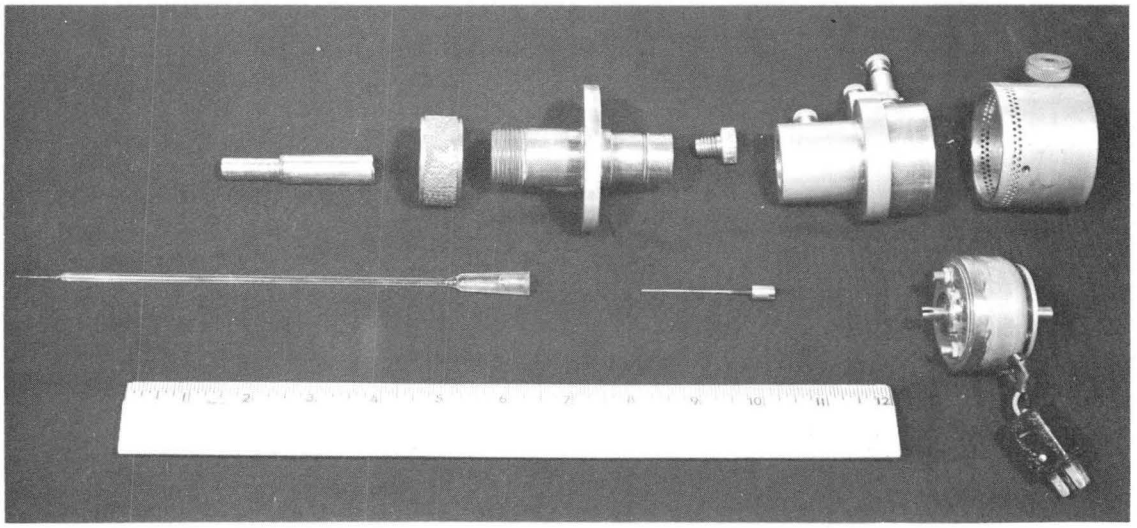

ZN-5282

Fig. 7

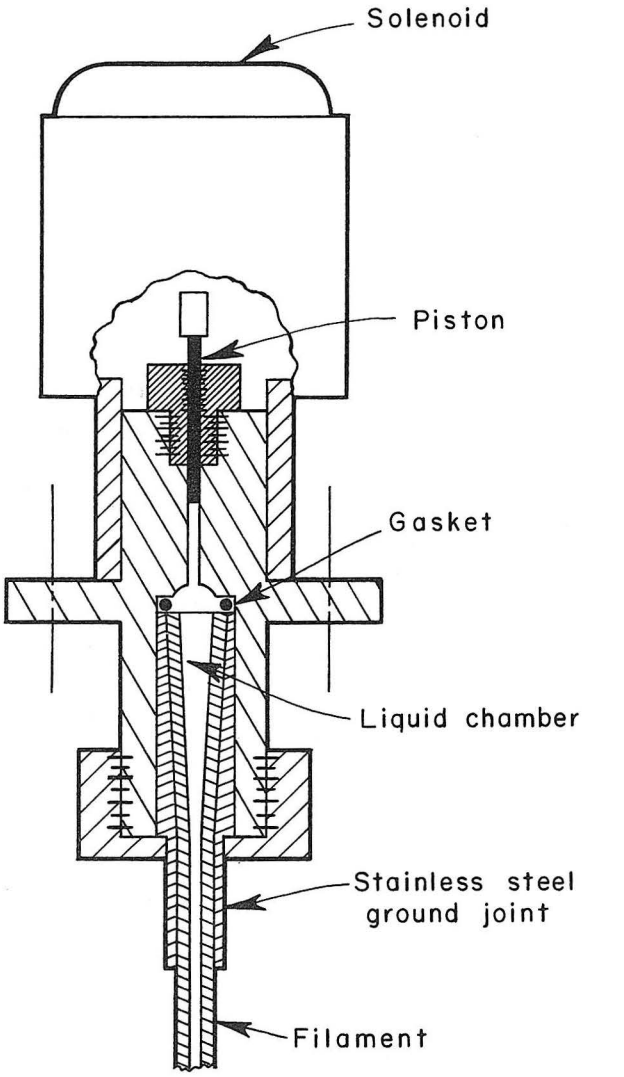

MU-36790

Fig. 8

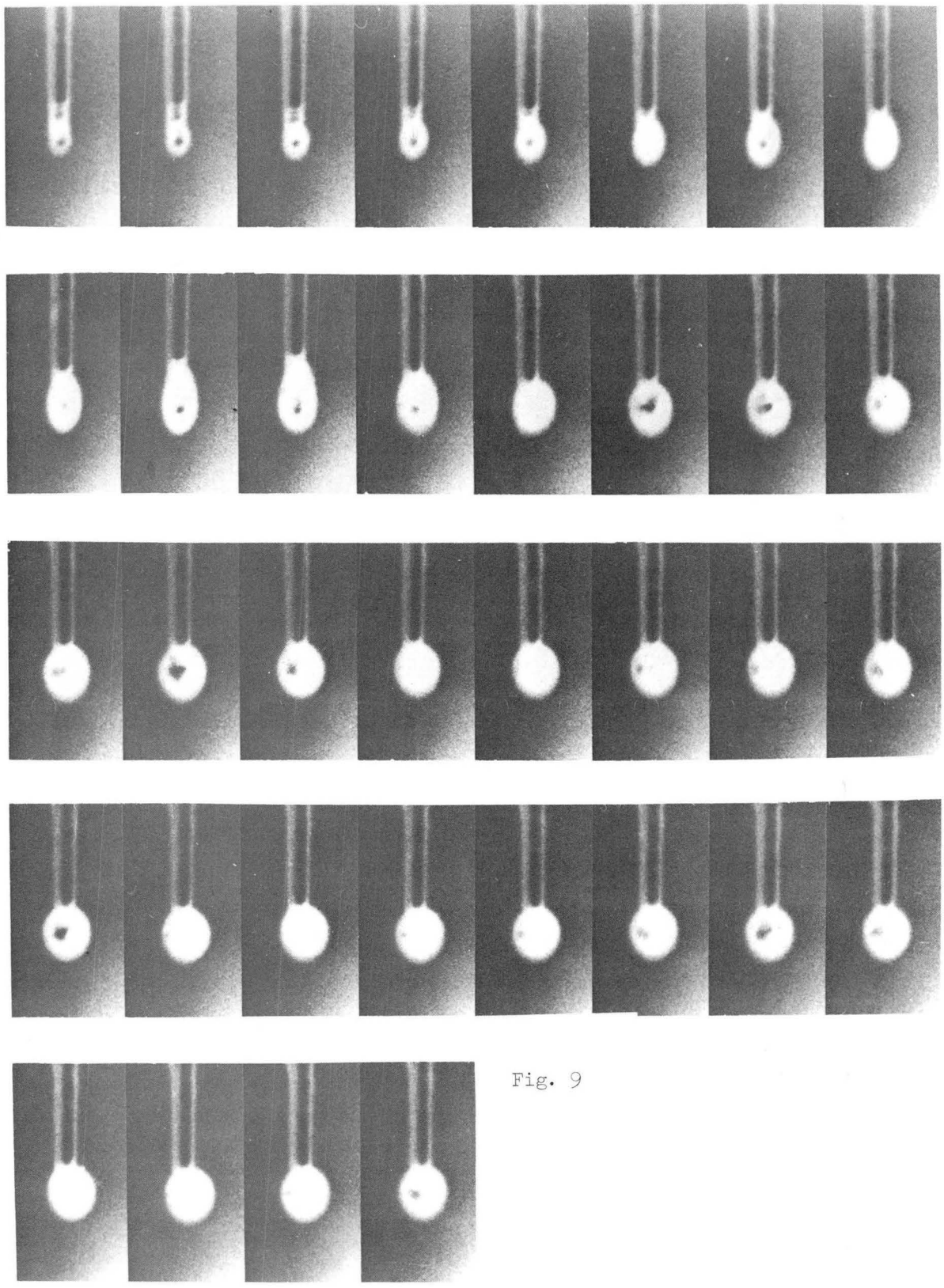

Fig. 9

APPENDIX A.

Mathematical Model for Droplet Injector

The following model was developed to simulate the process of droplet formation and hence yield salient design criteria for the droplet injector.

The following assumptions characterize the injection model: the piston moves instantaneously as compared to the time of droplet formation; the equations for well developed steady state laminar flow hold for this case; the volume of the injector body remains constant; and, the process is isothermal.

Nomenclature:

P_a = atmospheric pressure

P_d = internal droplet pressure

P_c = chamber pressure of injector

D = droplet diameter

d = outside diameter of filament

L_f = length of filament

r_f = inside radius of filament

V_c = chamber volume of injector (constant)

β = compressibility of liquid fuel

Q_2 = volumetric flow rate of liquid fuel between the piston and sleeve

Q_1 = volumetric flow rate of liquid through the filament

R = inside radius of piston sleeve

r = radius of piston

L_p = length of piston sleeve

σ = surface tension

t = time

μ = viscosity

The Injection Model:

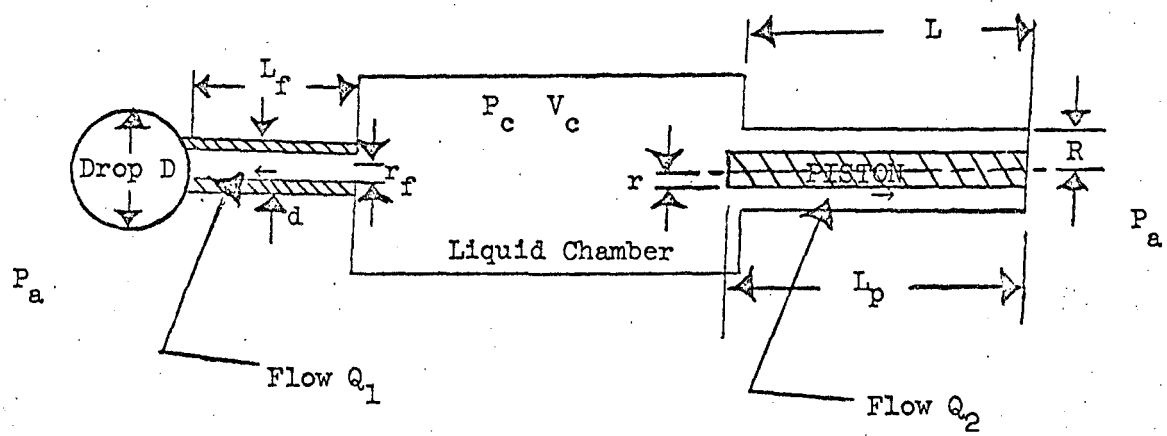

$Q_1 \equiv$ Laminar Flow Through Tube

$Q_2 \equiv$ Laminar Flow Through Annulus

1. $Q_1 = k_1 (P_c - P_a) = \dfrac{dV_1}{dt}$

2. $Q_2 = k_2 (P_c - P_a) = \dfrac{dV_2}{dt}$

$$k_1 = \frac{\pi r_f^4}{8\mu L_f} \qquad k_2 = \frac{(R + r)(R - r)^3}{12\,\mu\, L}$$

3. $\beta = -\dfrac{1}{V_c}\dfrac{dV}{dP}$

A. The first case to consider is when $Q_2 = 0$, that is, piston clearance is zero and no fuel can escape by flowing up the annulus between the piston and wall.

Initial conditions:

$$t = 0$$
$$P_c = P_o$$
$$V_c = V_o$$
$$P_a = P_a$$

Boundary conditions:

$$P_c = P$$
$$P_a = P_a$$

From Equations (1) and (2)

$$\frac{dV_1}{dt} = k_1 (P - P_a)$$

$$dV = \beta V_c \, dP$$

By substitution

$$\frac{dP}{dt} = - \frac{k_1}{\beta V_c} (P - P_a) \; ; \int_{P_o}^{P} \frac{dP}{(P-P_a)} = \int_0^{\tau} - \frac{k_1}{\beta V_c} dt$$

and

$$\frac{P - P_o}{P_o - P_a} = e^{-t/\tau_1}$$

where $\tau_1 = \frac{\beta V_c}{k_1}$ an ordinary time constant.

Then, solving for droplet volume as a function of time:

$$\frac{dV}{dt} = (P_o - P_a) \, k_1 \, e^{-t/\tau_1}$$

and

$$\int_{V_o}^{V} dV = (P_o - P_a)\, k_1 \int_o^t e^{-t/\tau_1}\, dt$$

$$V_o = V - V_o = (P_o - P_a)\, k_1\, \tau_1 \left[1 - e^{-t/\tau_1}\right]$$

The result shows that the droplet will grow to 2/3 of its final value in the time τ_1. Though growth continues after time τ_1, it will be somewhat slower, and if τ_1 is small enough in comparison to the ignition lag time, the growth rate, i.e., rate of increase in diameter of the droplet, will be negligible at the instant of ignition.

B. A more realistic design calculation can be made if leakage past the piston is considered. Then

$$dV = \beta B_c\, dp \quad ; \quad Q_1 = k_1\,(P - P_a) = \frac{dV_1}{dt} \; ; \quad Q_2 = k_2\,(P - P_a) = \frac{dV_2}{dt}$$

and the volume of the liquid at any time is

$$V\,(t) = V_1(t) + V_c$$

and

$$dV = -\,\beta B_c\, dp = (k_1 + k_2)\,(P - P_a)\, dt$$

$$\int_{p_o}^{P} \frac{dP}{(P - P_a)} = -\,\frac{(k_1 + k_2)}{\beta V_c} \int_o^t dt$$

$$\frac{P - P_a}{P_o - P_a} = e^{-t/\tau}$$

where

$$\tau = \frac{\beta V_c}{(k_1 + k_2)} = \frac{1}{\frac{1}{\tau_1} + \frac{1}{\tau_2}}$$

The volume of the droplet is calculated as

$$\frac{1}{k_1} \quad \frac{dV}{dt} = (P_o - P_a) \quad e^{-t/\tau}$$

$$\int_{V_o}^{V} dV_1 = k_1 \, (P_o - P_a) \int_o^t e^{-t/\tau} \, dt$$

$$\overline{V}_D = k_1 \, (P_o - P_a) \, \tau \quad [1 - e^{-t/\tau}]$$

From this second simple equation one can see that the volume of the droplet formed with some leakage present is smaller and is formed faster than the first droplet. That is, when the droplet volumes corresponding to their relative time constants are compared:

$$\frac{\overline{V}_D}{V_D} = \frac{\tau}{\tau_1} = \frac{k_1}{(k_1 + k_2)}$$

$$\tau < \tau_1 \quad \text{and} \quad \overline{V}_D < V_D$$

APPENDIX B

Strength of Pressure Vessel

The strength of the materials used for the pressure vessel is determined by the formulas of the ASME code for unfired pressure vessels. The formulas and calculations follow

A. Properties of the system

1. Design pressure: P + 150 psi
2. Material: stainless steel (304)
3. Maximum allowable stress: S = 16000 psi welded
4. Joint efficiency: E = 0.60
5. Inside radius: R = 7 in.
6. Bolt circle diameter: d = 16-1/4 in.
7. Factor: c = .25
8. Gasket factor: m = 0.50
9. Gasket load reaction diameter: G = 15-1/16 in.
10. Effective gasket seating width: b = 13/16 inc.
11. Radial distance from gasket load reaction to bolt circle: h_a = 19/32 in.

B. Thickness of cylindrical shell (t).

$$t = \frac{PR}{SE-0.6P}$$

$$= \frac{(150)(7)}{(1600)(0.60) - (0.60)(150)}$$

$$= 0.1104 \text{ in.}$$

C. Thickness of flat head (bolted).

$$t = d\sqrt{cP/S + 1.78W_h G/Sd^3}$$

where W = bolt load.

Total bolt load:

$$W = 0.785\ G^2\ P + 2b\ (3.14\ GmP)$$

$$= 0.785\ (15\text{-}1/16)^2\ (150) + 2(13/16)(3.14)(15\text{-}1/16)(1/2)(150)$$

$$= 32{,}470 \text{ pounds}$$

$$t = 16\text{-}1/4\sqrt{\frac{(0.25)(150)}{16000} + \frac{(1.78)(32470)(19/32)}{(1600)(16\text{-}1/4)^3}}$$

$$= 0.686 \text{ inches}$$

D. Thickness of welded tank bottom.

$$t = d\sqrt{\frac{Pc}{S}}$$

$$= 14.25\sqrt{\frac{(0.25)(150)}{16000}}$$

$$= 0.678 \text{ in.}$$

According to the ASME code, the small openings in the pressure vessel used for view ports, electrical leads, and tubes did not materially affect the calculations.

APPENDIX C

Injector Design Calculation

The droplet injector was designed to duplicate as closely as possible the model discussed in Appendix A. The following is a sample design calculation used in determining the design of the injector.

Purpose: Calculate chamber volume necessary to form a 400μ diameter water droplet with $\tau = 0.01$ sec.

Restrictions:

a) Percent of surface of droplet covered by filament not to exceed 10%. The allowable filament diameter at the droplet surface is then set at

$$d = D/2.5$$

b) By drawing filaments, it was found that the inside diameter of a quartz filament is about 1/2 of the outside diameter. Then

$$r_f \sim d/4 \sim D/10$$

In a 400μ diameter water droplet

$$\tau = \frac{\beta V_c}{k_1} \quad ; \quad k_1 = \frac{\Pi r_f^4}{8\mu L_f} \quad ; \quad r_f = 4\times10^{-3} \text{ cm}$$

where

$\tau = 0.01$ seconds

$\beta = 50\times10^{-6}$ atm^{-1}.

$L_f = 1$ cm

$\mu = 1$ centipoise

$$V_c = \frac{\tau K_1}{\beta} = \frac{(10^{-2})(4)^4\ 10^{-12}}{(5\times10^{-5})(8)(9.9\times10^{-9})}$$

$$= 0.646 \text{ cm}^3 \text{ (chamber volume)}$$

Pressure in the chamber at t = 0 is

$$\Delta P = \frac{V_d}{V_c \beta} = \frac{(1/6)(3.14)(64)10^{-6}}{(0.646)(50\times10^{-6})}$$

$$= 1.03 \text{ atm. (Gage)}$$

Maximum back pressure from the droplet due to surface tension is:

$$P_d = \frac{4\sigma}{d}$$

where d is the diameter of the filament,

$$P_d = \frac{(4)(72.8)(9.9\times10^{-7})}{8\times10^{-3}}$$

$$= 0.0364 \text{ atm. (negligible)}$$

These calculations suggest that the filament should be constructed to have a chamber volume of 0.646 cm^3 to form a droplet of about 400μ in diameter in 0.01 sec.

REFERENCES

1. G. A. E. Godsave, Fourth International Symposium on Combustion, p. 818 (1953).

2. D. B. Spalding, Fourth International Symposium on Combustion, p. 847 (1953).

3. M. Goldsmith and S. S. Penner, Jet Propulsion, 24, 245 (1954).

4. T. Okazaki and M. Gomi, Trans. Japan Soc. Mech. Eng., 19, p. 1 (1953).

5. H. Wise, J. Lorell and B. J. Wood, Fifth International Symposium on Combustion, p. 132 (1955).

6. A. A. Agoston, H. Wise, and W. A. Rosser, Sixth International Symposium on Combustion, p. 708 (1957).

7. J. A. Bolt and M. A. Saad, Sixth International Symposium on Combustion, p. 717 (1957).

8. S. Kumagi and H. Isoda, Sixth International Symposium on Combustion, p. 726 (1957).

9. K. P. Coffin and R. S. Brokaw, N.A.C.A., T.N. 3929 (1957).

10. J. Lorell and R. Carr, J. Chem. Phys, 25, 325 (1956).

11. H. Isoda and S. Komagai, Seventh International Symposium on Combustion, p. 523 (1959).

12. H. R. Hall and J. Diederichsen, Fourth International Symposium on Combustion, p. 837 (1953).

13. D. B. Spalding, ARS Journal, 29, 828 (1959).

14. G. A. Agoston, B. J. Wood and H. Wise, Jet Propulsion, p. 181 (1958).

15. C. Sanchez Tarifa, P. Perez del Notario and F. Garcia Moreno, Eighth International Symposium on Combustion, p. 1035 (1961).

16. F. A. Williams, J. Chem. Phys., 33, p. 133 (1960).

17. M. Goldsmith, Jet Propulsion 26, p. 172 (1956).

18. D. G. Ubelson, Combustion and Flame, p. 93 (1962).

19. T. J. A. Bolt and M. A. Saad, Sixth International Symposium on Combustion, p. 717 (1957).

20. H. C. Hottel, G. E. Williams, and H. C. Simpson, Fifth Symposium on Combustion, p. 101 (1955).

21. R. D. Ingero, NACA, TN 2368.

22. S. Kumagai and H. Isoda, Fifth International Symposium on Combustion, p. 129 (1954).

23. S. Kumagai and H. Isoda, Science of Machine, 4, p. 337 (Japan 1952).

24. S. Kumagai and I. Kimura, Science of Machine, 3, p. 431 (Japan 1951).

25. K. Kobayashi, Fifth International Symposium on Combustion, p. 141 (1954).

26. N. Nishiwaki, Fifth International Symposium on Combustion, p. 148 (1954).

27. D. A. Frank-Kamenetsky, Diffusion and Heat Exchange in Chemical Kinetics, Trans. (Princeton University Press, 1955) p. 285-325.

28. C. H. Yang, Combustion and Flame, p. 215 (1962).

29. K. C. Salooja, Combustion and Flame, p. 243 (1961).

30. R. Friedman and A. Macek, Combustion and Flame, p. 9 (1962).

31. F. B. Cramer, Ninth International Symposium on Combustion, p. 482 (1963).

32. L. Monchick and H. Reiss, J. Chem. Phys., 22, p. 831 (1952).

33. J. B. Wijffels, Behavior of Droplets Evaporating in High Temperature Convective Environment, (M.S. Thesis), University of California, Berkeley, Sept. 1965.

34. R. J. Priem, G. L. Borman, M. el Wakil, O. A. Uyehara, P. S. Myers, NACA, TN 3988.

FIGURE CAPTIONS

Fig. 1 Experimental Apparatus

Fig. 2 Experimental Apparatus

Fig. 3 Assembled Droplet Injector

Fig. 4 Lower Section of Pressure Vessel and Crucible

Fig. 5 Schematic Diagram of Pressure Vessel

Fig. 6 Schematic Diagram of Pressure Vessel and Crucible

Fig. 7 Disassembled Droplet Injector

Fig. 8 Schematic Diagram of Injector

Fig. 9 400μ Diameter Droplet Forming on 140μ Diameter Filament at 1000 f/s, Mag. 1:1

This report was prepared as an account of Government sponsored work. Neither the United States, nor the Commission, nor any person acting on behalf of the Commission:

A. Makes any warranty or representation, expressed or implied, with respect to the accuracy, completeness, or usefulness of the information contained in this report, or that the use of any information, apparatus, method, or process disclosed in this report may not infringe privately owned rights; or

B. Assumes any liabilities with respect to the use of, or for damages resulting from the use of any information, apparatus, method, or process disclosed in this report.

As used in the above, "person acting on behalf of the Commission" includes any employee or contractor of the Commission, or employee of such contractor, to the extent that such employee or contractor of the Commission, or employee of such contractor prepares, disseminates, or provides access to, any information pursuant to his employment or contract with the Commission, or his employment with such contractor.