UCRL-16472

University of California

Ernest O. Lawrence Radiation Laboratory

MEASUREMENT OF HEAT RELEASED ON SOLID SURFACES

TWO-WEEK LOAN COPY

This is a Library Circulating Copy which may be borrowed for two weeks. For a personal retention copy, call Tech. Info. Division, Ext. 5545

DISCLAIMER

This document was prepared as an account of work sponsored by the United States Government. While this document is believed to contain correct information, neither the United States Government nor any agency thereof, nor the Regents of the University of California, nor any of their employees, makes any warranty, express or implied, or assumes any legal responsibility for the accuracy, completeness, or usefulness of any information, apparatus, product, or process disclosed, or represents that its use would not infringe privately owned rights. Reference herein to any specific commercial product, process, or service by its trade name, trademark, manufacturer, or otherwise, does not necessarily constitute or imply its endorsement, recommendation, or favoring by the United States Government or any agency thereof, or the Regents of the University of California. The views and opinions of authors expressed herein do not necessarily state or reflect those of the United States Government or any agency thereof or the Regents of the University of California.

TECHNICAL INFORMATION DIVISION

Lawrence Radiation Laboratory

Berkeley

Loan to

Assigned to INFORMATION DIVISION

Route to	Noted
J. R. Selman	JUN 8 1966

Please return this document to the Information Division. Do not send it to the next person on the list.

Please do not remove this page.

RL-254-1

UCRL-16472
UC-4 Chemistry
TID-4500 (47th Ed.)

Research and Development

UNIVERSITY OF CALIFORNIA

Lawrence Radiation Laboratory
Berkeley, California

Contract No. W-7405-eng-48

MEASUREMENT OF HEAT RELEASED ON SOLID SURFACES

Rolf H. Muller and Louis B. Nobbe

December 1965

MEASUREMENT OF HEAT RELEASED ON SOLID SURFACES

Rolf H. Muller and Louis B. Nobbe*

Inorganic Materials Research Division,
Lawrence Radiation Laboratory
University of California
Berkeley, California

December 1965

ABSTRACT

The measurement of reaction enthalpies on solid surfaces of simple, well-defined geometry requires a quantitative knowledge of heat dissipation and the measurement of exceedingly small temperature differences. Both of these problems are analyzed theoretically with particular reference to the determination of heats of adsorption and immersion using presently available instrumentation.

* Also with Dept. of Electrical Engineering, University of California, Berkeley, California

I. INTRODUCTION

Heat effects on solid-fluid interfaces represent an important aspect in the thermodynamics of solid surfaces. Typical examples of such heat effects are the heat of adsorption from vapors and solutions which are related to wettability, adhesion,[1] the formation of the electrolytic double layer and the enthalpy changes in heterogeneous reactions such as the electrolytic crystal growth.

In the past surface calorimetric data such as heats of immersion have been determined by use of powdered materials. Their high surface area per unit mass results in a relatively large temperature change which can be measured by conventional calorimetric techniques. However, the high specific surface area of a powder has several disadvantages such as:

1) Poorly defined surface structure due to deformed lattice, presence of corners and cracks
2) Difficulties in removing and preventing contamination and oxide films
3) Uncertainty in surface area measurement.

Calorimetric results, therefore, may be found to depend on the particle size.[1]

The use of a well-defined solid surface of simple geometry would eliminate many of these uncertainties. However, two problems arise under these circumstances:

1) The small amount of energy released results in a temperature change for which present calorimetric techniques are not sensitive enough.
2) Heat dissipation from the surface leads to a rapidly decaying local temperature from which the energy released must be inferred on theoretical grounds.

On the basis of thermal noise as the theoretical limit of sensitivity, as suggested by Chavet,[2] development of a calorimeter that will detect the heat of immersion is theoretically feasible. Common values of heats of immersion of about 100 ergs/cm^2 (2.38 X 10^{-6} cal/cm^2) for metals surfaces are well above thermal noise limit given by Chavet as about .1 to 1 erg depending on calorimeter construction. The use of more sensitive temperature sensing devices such as thermopiles and thin film thermistors that have been recently developed coupled with improved electronic techniques for recovering low level signals from noise open up many possiblities for improved sensitivity in calorimetry. The literature gives several examples of these improved techniques. Benzenger and Kitzinger[3] use a thermopile with 10,000 junctions to sense "heat burst" energies in the millicalorie range. La Force, Ravitz, and Kendall[4] combine a sensitive A.C. thermistor bridge with phase sensitive detection techniques to measure temperature changes of 10^{-4}°C with high precision. Chavet[2] analyzes several sensitive calorimeters with respect to thermal noise limits. While none of these calorimeters will serve to make the desired measurement of heat of wetting on planar surfaces, they demonstrate techniques which might be extended for doing so.

The calorimetric arrangment to be considered here consists of a thin film of a metal (or some other solid) to be studied deposited on a base of a thermal insulator (such as epoxy resin). Contact with vapor or liquid is assumed to produce an instantaneous release of energy at the film surface. The resultant temperature increase will dissipate into the epoxy base in one direction and the liquid in the other. A detailed analysis of the decay of the induced temperature rise is given for two cases:

1) Heat is released instantaneously over the whole surface
2) Heat is released at the leading edge of a climbing film of liquid.

Detection of the resulting temperature change with thermistors, resistance thermometers and thermopiles is considered. The small amount of energy released limits the choice of sensors to elements of low mass that can be located very near the surface. Furthermore the amount of energy dissipated from the measuring circuit in the sensing elements must be small compared to the energy to be measured. This is necessary because changes in heat dissipation rate from such a steady source, e.g., due to immersion, would result in a temperature change which could not be separated from an interfacial thermal effect, e.g., heat of immersion. The restriction on heat dissipation in the sensor limits the amount of power that may be applied to a thermistor or resistance thermometer bridge and hence, limits the sensitivity of the bridge circuit. Since circuit noise is a principle consideration for detectability of low level resistance changes, the theoretical noise limits are analyzed. Noise reduction is found to be of major importance in bridge design and the choice of detector. With the thermopile, on the other hand, heat dissipation is not a problem, although noise still is.

II. THEORETICAL ANALYSIS OF HEAT DISSIPATION ON A PLANE SURFACE

The thermal effect produced by the heat of wetting when a plane surface is immersed in a liquid is best described by the decay of an instantaneous plane source of heat in an infinite composite medium. Here we shall consider a base of an insulating material, such as epoxy resin on which a very thin film of metal such as nickel has been deposited. Figure 1 shows the diagram of the arrangement. The metal film is assumed to have negligible heat capacity and negligible resistance to heat transfer, thus the temperature effects of the heat evolved at the film surface can be closely approximated by a plane heat source at the plane of intersection of epoxy and water. Since the source strength will be small, the distance of penetration of the temperature change will be short and the assumption of two semi-infinite media causes negligible error. Equations for the case of immersion in liquid water will also be applicable to immersion in water vapor by using the thermal properties of the vapor instead of those of the liquid.

If a thin liquid film is allowed to climb up the surface provided by the metal film rather than immersing the metal, the resulting heat effect can be approximated by a continuous line source moving up the plane of intersections of two semi-infinite media. Figure 2 shows a diagram of this system.

Point, Line and Plane Sources of Heat in Infinite Isotropic Media

The basic equation of heat conduction is given by:

$$\rho\, c_p \frac{\partial T_1}{\partial t} = k \nabla^2 T_1 \qquad (1)$$

where: T_1 = temperature at any point in the system in °C

t = time in seconds

ρ = density in grams/cc

c_p = heat capacity in cal/gm°C

k = thermal conductivity in cal/sec cm^2 $\left(\frac{°C}{cm}\right)$

∇^2 = Laplacean operator

x, y, z = coordinate directions in cm

Let T_o be the equilibrium temperature of the system before the heat is released at $t = 0$ and let $T = T_1 - T_0$. Then change of variables in Eq. (1) and rearranging gives

$$\frac{\rho\, c_p}{k} \frac{\partial T}{\partial t} = \nabla^2 T$$

or

$$\frac{1}{a^2} \frac{\partial T}{\partial t} = \nabla^2 T \qquad (2)$$

where $a^2 = \frac{k}{\rho c_p} = \frac{k}{c}$ = thermal diffusivity in $\frac{cm^2}{sec}$

$c = \rho c_p$ = volume heat capacity in cal/cc °C

We wish to obtain a solution to Eq. (2) for the instantaneous release of Q_2 cal/cm^2 of energy in a plane perpendicular to the x axis. We shall proceed by finding the solution for the instantaneous release of Q cal of heat at a point $\{x', y', z'\}$ and integrate this solution with respect to the y and z coordinates to obtain the solution for a plane source.

Carslaw and Jaeger[5] give Eq. (3) below as a solution for a <u>point source</u> of heat of strength Q cal released at (x', y', x') at time $t = 0$.

$$T = \frac{Q/c}{8(\pi a^2 t)^{3/2}} \; e^{-\frac{\{(x-x')^2 + (y-y')^2 + (z-z')^2\}}{4a^2 t}} \tag{3}$$

Equation (3) gives the temperature change T as the Q cal. source distributes itself with time in the infinite medium. As usual, with a source solution, at t = 0, T is zero except at {x', y', z'} where it becomes infinite.

To obtain a solution for an instantaneous line source, we may consider a distribution of point sources of strength $Q_1 dz$ cal. along a line parallel to the z axis and passing through {x', y'}. The solution to such a distribution is obtained by integrating Eq. (3) with respect to z obtaining Eq. (4) below.

$$T = \int_{-\infty}^{+\infty} \frac{Q_1/c}{8(\pi a^2 t)^{3/2}} \; e^{-\frac{\{(x-x')^2 + (y-y')^2 + (z-z')^2\}}{4a^2 t}} \, dz$$

$$T = \frac{Q_1/c}{4\pi a^2 t} \; e^{-\frac{\{(x-x')^2 + (y-y')^2\}}{4a^2 t}} \tag{4}$$

where Q_1 is the amount of heat released per unit length of the line in cal/cm.

Similarly a solution for an instantaneous plane source may be obtained by considering a distribution of line sources along a plane parallel to the y and z axis and passing through x = x'. The temperature distribution results from integrating Eq. (4) with respect to y using line source strength Q_2 dy gives Eq. (5) below:

$$T = \int_{-\infty}^{+\infty} \frac{Q_2/c}{4\pi a^2 t} e^{-\frac{\{(x-x')^2 + (y-y')^2\}}{4a^2 t}} dy$$

$$T = \frac{Q_2/c}{\sqrt{4\pi a^2 t}} e^{-\frac{(x-x')^2}{4a^2 t}} \tag{5}$$

where Q_2 is the amount of heat released per unit area in cal/cm^2. For our purpose we will let the plane of the heat source pass through the origin, $x' = 0$, obtaining

$$T = \frac{Q_2/c}{\sqrt{4\pi a^2 t}} e^{-\frac{x^2}{4a^2 t}} \tag{6}$$

Rearranging Eq. (6) we get:

$$u = \frac{cT}{Q_2} = \frac{e^{-\frac{x^2}{4a^2 t}}}{\sqrt{4\pi a^2 t}} \tag{7}$$

Equation (7) is the plane source equation in the form given in Jahnke and Emde[6] for an infinite isotropic medium. u is the normalized heat density used by Jahnke and Emde.[6]

Instantaneous Plane Source of Heat in a Composite Medium

Since our problem contains an instantaneous plane source at the plane of intersection of two semi infinite media of different thermal properties we must adapt Eq. (6) for this case. Examination of Eq. (6) reveals symmetry about the plane of the source. Since the resistance to heat transfer through the metal film is negligible, there is no discontinuity in temperature at the plane of intersection. The temperature must always be highest

at the interface, hence, no heat is transferred across the interface. We may assume, then, that from the moment of heat release, the total quantity of heat is distributed between the two semi-infinite media. The resulting temperature distributions in the two media can then be thought of as the result of two plane sources of strength Q_{2w} and Q_{2e} which are related to each other and to the actual strength of the source Q_{2T}. The resulting distributions are given by Eqs. (8) and (9) below.

$$T_w = \frac{Q_{2w}}{c_w \sqrt{4\pi a_w^2 t}} \, e^{-\frac{x^2}{4a_w^2 t}} \qquad x \leq 0 \tag{8}$$

$$T_e = \frac{Q_{2e}}{c_e \sqrt{4\pi a_e^2 t}} \, e^{-\frac{x^2}{4a_e^2 t}} \qquad x \geq 0 \tag{9}$$

Equation (8) gives the temperature in the semi-infinite medium w resulting from the plane source Q_{2w} assuming the infinite medium has the thermal properties of w. Similary, Eq. (9) gives temperature for semi-infinite medium e. Since there is no discontinuity at the interface,

$$T_w = T_e \text{ for all } t \text{ at } x = 0.$$

Because the total heat remains distributed between the two media, the heat balance relation (1) must hold.

$$\int_{-\infty}^{0} C_e \, T_e \, dx + \int_{0}^{\infty} C_w \, T_w \, dx = Q_{2T} \tag{10}$$

Integration of Eq. (10) gives

$$\frac{Q_{2w}}{2} + \frac{Q_{2e}}{2} = Q_{2T} \tag{11}$$

Then, equating Eqs. (8) and (9) at x = 0 gives

$$\frac{Q_{2w}}{c_w \sqrt{4\pi a_w^2 t}} = \frac{Q_{2e}}{c_e \sqrt{4\pi a_e^2 t}}$$

simplifying and substituting $a^2 = k/c$

$$\frac{Q_{2w}}{Q_{2e}} = \sqrt{\frac{c_w k_w}{c_e k_e}}$$

Combining this result with Eq. (11) results in

$$Q_{2e} = \frac{2}{1+\sqrt{\frac{c_w k_w}{c_e k_e}}} Q_{2T} \tag{12}$$

$$Q_{2w} = \frac{2}{1+\sqrt{\frac{c_e k_e}{c_w k_w}}} Q_{2T} \tag{13}$$

which gives the relation between the relative source strengths for the two semi-infinite media and the original source strength. This result agrees with a similar one given in Carslaw and Jaeger.[7]

Moving Continuous Line Source of Heat in an Infinite Isotropic Medium

We shall first derive the equation for a moving continuous point source in an infinite medium and then proceed to the solution for the moving line source. To simplify the derivation we shall assume that an infinite medium is moving at a constant velocity in the direction of the positive y axis

past a point source at the origin which emits heat at the rate of q calories per second. This assumption is equivalent to a continuous point source moving through the infinite medium along the y axis with a constant velocity in the negative y direction.

In the element of time, dt', q dt' calories were emitted at the origin; and the point of the medium which at time t, is at (x,y,z) was at {x,y-U(t-t'),z} at time t'. Using the equation for a point source (Eq. (3)) with:

$Q = q\ dt'$ = heat released in time element dt'

$t = t-t'$ = time interval in sec

$y = y-U(t-t')$ = distance in cm.

We have

$$T = \frac{q\ dt'}{8c[\pi a^2(t-t')]^{3/2}}\ e^{-\frac{[x^2+\{y-U(t-t')\}^2+z^2]}{4a^2(t-t')}} \qquad (14)$$

for the temperature at point (x,y,z) at time t. If we integrate Eq. (14) from 0 to t we obtain an equation for heat supplied from time 0 to t, to a point at the origin

$$T = \int_0^t \frac{q}{8c[\pi a^2]^{3/2}}\ \frac{e^{-\frac{[x^2+\{y-U(t-t')\}^2+z^2]}{4a^2(t-t')}}}{(t-t')^{3/2}}\ dt' \qquad (15)$$

Changing variables

$$\alpha = \frac{(x^2+y^2+z^2)^{1/2}}{2a(t-t')^{1/2}}$$

$$d\alpha = \frac{(x^2+y^2+z^2)^{1/2}\ dt'}{4a(t-t')^{3/2}}$$

$$B = \text{upper limit } \frac{(x^2+y^2+z^2)^{1/2}}{2a(t-t')^{1/2}}\Bigg|_{t'=t} = \infty$$

$$A = \text{lower Limit } \frac{(x^2+y^2+z^2)^{1/2}}{2a(t-t')^{1/2}}\Bigg|_{t'=0} = \frac{(x^2+y^2+z^2)^{1/2}}{\sqrt{4a^2t}}$$

Equation (15) becomes

$$T = \frac{q}{2ca^2\pi^{3/2}(x^2+y^2+z^2)^{1/2}} \int_A^B \frac{e^{\left[\frac{(x^2+y^2+z^+)}{4a^2(t-t')} + \frac{U^2(t-t')}{4a^2} + \frac{Uy}{2a^2}\right]}(x^2+y^2+z^2)dt'}{4a(t-t')^{3/2}}$$

$$= \frac{qe^{\frac{Uy}{2a^2}}}{2k\pi^{3/2}(x^2+y^2+z^2)^{1/2}} \int_A^B e^{\left[-\alpha^2 - \frac{U^2(x^2+y^2+z^2)}{16a^4\alpha^2}\right]} d\alpha \qquad (16)$$

Letting $t \to \infty$ in Eq. (16) we get the lower limit equal to zero and we have an equation of the form

$$\int_0^\infty e^{\left\{-x^2 - \frac{a^2}{x^2}\right\}} dx = \frac{\sqrt{\pi}\, e^{-2a}}{2}$$

Using this result we get:

$$T = \frac{qe^{\frac{uy}{2a^2}} e^{-\frac{u(x^2+y^2+z^2)^{1/2}}{2a^2}}}{4\pi k\,(x^2+y^2+z^2)^{1/2}} \qquad (17)$$

Equation (17) gives the temperature at any point (x,y,z) in the infinite medium moving past a continuous point source of strength q cal/sec located

at the origin. We may consider Eq. (17) as the temperature-distance relationship for an infinite medium through which a point source moves with a velocity U in the negative direction. The coordinate system moves with the source so the position of the point source is always the origin.

To obtain the equation for a continuous line source in an infinite medium, we may consider a distribution of point sources of strength q_1 dz along the z axis. The solution of such a distribution is obtained by integrating Eq. (17) with respect to z from $-\infty$ to $+\infty$.

$$T = \frac{q_1 e^{\frac{Uy}{2a^2}}}{4\pi k} \int_{-\infty}^{+\infty} \frac{e^{-\frac{U(x^2+y^2+z^2)^{1/2}}{2a^2}}}{(x^2+y^2+z^2)^{1/2}} \, dz$$

From Carslaw and Jaeger[8]

$$\int_{-\infty}^{\infty} \frac{e^{-\frac{U[x^2+y^2+z^2]^{1/2}}{2a^2}}}{(x^2+y^2+z^2)^{1/2}} \, dz = K_0 \left[\frac{U(x^2+y^2)^{1/2}}{2a^2} \right]$$

where $K_0(x)$ is the modified Bessel function of the second kind of order zero. This result gives,

$$T = \frac{q_1 e^{\frac{Uy}{2a^2}}}{4\pi k} K_0 \left[\frac{U(x^2+y^2)^{1/2}}{2a^2} \right] . \tag{18}$$

Equation (18) gives the temperature at any point (x,y) in an infinite medium that is moving past a line source of strength q_1 cal/(sec)(cm.) located on the z axis. We may also consider Eq. (18) as the temperature at any point of a medium through which a line source is moving at a velocity U in the direction

of the negative y axis in the plane of the y and z axes (see Fig. 2). The coordinate system moves with the line source so that the line of heat release is always on the z axis.

A rigorous solution for a moving line source in a composite medium would be very difficult. No symmetry exists to simplify the solution as was the case with the plane source. We may estimate the lowest and the highest temperature distributions expected by first assuming that the moist air and the water film which contact the surface have the same thermal properties as the epoxy has and then assuming that the air-water medium forms a perfect insulator. For the first assumption we can use Eq. (18) directly. Examination of Eq. (18) shows symmetry about the plane in which the line source moves. The method of reflection about the plane of symmetry may be used to find the temperature distribution for a perfect insulator at the metal surface. Hence, the higher limit of the temperature distribution could be approximated by Eq. (18) using twice the actual source strength.

Numerical Data

Temperature distribution curves for epoxy-water composite medium have been computed. They are based on the values of the thermal constants for epoxy resins and water given in Table I. Since the value of thermal diffusivity ($a^2 = \frac{k}{\rho c}$) for epoxy and water are very nearly equal and the value for epoxy is somewhat uncertain; we chose them equal for this work to simplify calculations and plotting of curves.

A plot of temperature decay in the epoxy base resulting from an instantaneous plane source of 100 erge/cm^2 at the intersection of the semi-infinite epoxy-water media is given in Fig. 3. This plot shows temperature versus time with distance from the surface of intersection (metal surface) as the

Table I. Physical Constants

	Epoxy Resin (Bisphenol A coating resin without filler)[13]		Water		Dry air at 20 °C
k thermal conductivity	16.7×10^{3} $\frac{\text{ergs}}{\text{sec cm}^2(°\text{C/cm})}$	$4.0\text{-}5.0 \times 10^{-4}$ * $\frac{\text{cal}}{\text{sec cm}^2(°\text{C/cm})}$	59.8×10^{3} $\frac{\text{ergs}}{\text{sec cm}^2(°\text{C/cm})}$	14.29×10^{-4} at 20 °C $\frac{\text{cal}}{\text{sec cm}^2(°\text{C/cm})}$	6.35×10^{-5} $\frac{\text{cal}}{\text{sec cm}^2(°\text{C/cm})}$
c_p spec. heat		0.25 cal/g°C		1.0 cal/g°C	0.25 cal/g°C
ρ spec. gravity		1.11 g/cm^3		1.0 g/cm^3	0.0012 cm/°C
$c = c_p \rho$	1.18×10^{7} ergs/cm^3°C	0.28 cal/cm^3°C	4.18×10^{7} ergs/cm^3°C	1.0 cal/cm^3°C	3×10^{-4} cal/cm^3°C
$a^2 = \frac{k}{c}$	$\frac{4.0 \times 10^{-4}}{.28} = 1.43 \times 10^{-3}$ cm^2/sec		1.43×10^{-3} cm^2/sec		0.216 cm^2/sec

* 4.0×10^{-4} used in computations

parameter. Figure 4 shows the same data plotted with temperature versus distance and time as the parameter. Both Fig. 3 and Fig. 4 were plotted from Eq. (6) using source strength Q_{2c} from Eq. (12) and the thermal data for epoxy from Table I. Since the thermal diffusivities of water and epoxy are about equal, these curves are also valid for the water semi-infinite medium without convection. These curves are used in considering temperature sensing devices to measure the heat evolved when the metal-covered epoxy base is immersed in an aqueous medium.

The temperature distribution for a moving line source is given in Figs. 5,6, and 7. These plots represent the temperature decay in the epoxy base expected when a thin film of water climbs the metal surface at a rate of 1 cm. per hour, assuming that the saturated air and thin water film insulate the metal surface perfectly. Figure 5 is a direct plot of Eq. (18) using the thermal data for epoxy in Table I. Figures 6 and 7 are plots of the temperature decay with time for various depths into the epoxy base at the line where the heat was released at time $t = 0$. The temperature given by Eq. (18) is plotted against the time variable calculated from y and U in Fig. 6 and against the epoxy depth variable x in Fig. 7. Since end effects are negligible, the temperature at the origin at time $\frac{y}{U}$ is equal to the temperature at y from Eq. (18). The temperatures shown in Figs. 5, 6, and 7 are higher than those expected in the decay of an actual temperature increase because of the assumed perfect insulation toward medium w. A lower limit for the temperature can be found by taking one half of the value given in Figs. 5,6, and 7. As expected the temperature increase for a moving line source is less than for an instantaneous plane source since more time is allowed for the heat to partially dissipate away.

III. ELECTRONIC TEMPERATURE MEASURING SYSTEMS

Temperature Sensing Devices for Microcalorimeter Thermistor and Resistance Thermometer Bridge

The measurement of heat effects on solid surfaces requires the detection of very small temperature differences between the surface and a thermal sink. Bridge circuits containing temperature-sensitive resistances in two opposing bridge arms are well suited for such measurements since the output voltage is proportional to the differences in temperature of the two resistance elements. We shall consider bridges where one thermistor or resistance thermometer senses the temperature very near the metal surface and a matched element in an opposing leg of the bridge senses the sink temperature. A diagram of the bridge is shown in Fig. 8. The limit of accuracy of such a measurement is analyzed with respect to allowable power dissipation in the temperature sensitive elements and thermal noise in the bridge and detector circuits. The relations between the least temperature difference measurable, thermal noise, and circuit power are applicable to both a.c. and d.c. bridges and detectors; however, we shall consider only a.c. excitation and detection. We are dealing with extremely low level signals which are near the amplitude of the thermal noise voltage variation of the circuit. An a.c. measuring system is more promising because it is much more difficult to reach the limits of sensitivity set by thermal noise with d.c. detectors than with a.c. detectors.[9] The varying thermal emfs which inevitably occur further reduce the effective sensitivity that can be achieved with d.c. detectors.

Minimum Detectable Temperature Change

The sensitivity of the complete measuring system depends on the magnitude of the input signal as well as the sensitivity and signal-to-noise character-

istics of the bridge and detector circuits. The input signal to the bridge is due to the change in the resistance of the measuring element from R to R + ΔR. This change produces a change in voltage across R (Fig. 8) of ΔV_T given by

$$V_T + \Delta V_T = i_T(R+\Delta R)$$

since $i_T \approx \frac{V_T}{R}$ for small changes in ΔR

$$\Delta V_T = V_T \frac{\Delta R}{R} \tag{19}$$

But ΔV_T is also a function of the power P_T dissipated in the measuring element since

$$P_T = \frac{V_T^2}{R} \tag{20}$$

The bridge noise factor, F_c, relates the signal-to-noise characteristics of the bridge circuit to the circuit parameters.[10] The noise factor is defined as the ratio of the input to the output signal-to-noise power ratios. We shall use an equivalent but more convenient form of the noise factor which relates the square of the voltage ratios instead of the power ratios.

$$F_c = \frac{\left(\Delta V_T\right)^2 / V_{nT}^2}{V_{SB}^2 / V_{nB}^2} \tag{21}$$

where ΔV_T = voltage change produced by temperature change

V_{nT} = r.m.s. noise voltage from measuring element

V_{SB} = bridge output voltage

V_{nB} = r.m.s. noise voltage at bridge output

The open circuit r.m.s. thermal noise voltage of the measuring element, V_{nT}, is given by the Johnson relation:

$$V_{nT} = (4\ k\ T\ R\ \Delta\ f)^{1/2} \tag{22}$$

where: k = Boltzman constant = 1.38×10^{-23}

T = Temperature in °K

R = Resistance of measuring element at T, in ohms

Δf = Bandwidth of detector circuit, in sec^{-1}

The r.m.s. thermal noise at the output of the birdge, V_{nB}, is obtained with the same relation using the output bridge resistance, R_B, instead of R.

To derive a relation for the bridge output (V_{SB}), the input signal (ΔV_T), and the circuit parameters (K_1, K_2, K_3), we start with the relation between the bridge output and the bridge excitation voltage (V_B).

$$\frac{V_{SB}}{V_B} = \frac{(K_1K_2R)(R) - (K_1R)(K_2R)}{(K_1R+R)(K_1K_2R+K_2R)} \tag{23}$$

For a small change in R from R to R + ΔR after the bridge is initially balanced we get

$$\frac{V_{SB}}{V_B} = \frac{K_1K_2\ R\ \Delta R}{(K_1R + R + \Delta R)(K_1K_2R + K_2R)} \tag{24}$$

Since $K_1R + R >> \Delta R$

$$\frac{V_{SB}}{V_B} = \frac{K_1}{(K_1 + 1)^2} \quad \frac{\Delta R}{R} \tag{25}$$

Assuming the current drawn from the bridge by the detector is negligible:

$$V_B = (1 + K_1)V_T \tag{26}$$

Combining Eqs. (19), (25), and (26), we get

$$V_{SB} = \Delta V_T \frac{K_1}{(1 + K_1)} \left(\frac{\Delta R}{R}\right)^2 \tag{27}$$

Assuming the source resistance of the bridge excitation voltage is negligible with respect to the bridge resistor, the bridge output resistance is:

$$R_B = \frac{K_1(1+K_2)\ R}{(K_1+1)} \tag{28}$$

Substituting Eqs. (19), (21), (27), and (28), in Eq. (21), we get for the bridge noise factor:

$$F_c = (1+1/K_1)(1+K_2) \tag{29}$$

From Eq. (29) it is obvious that K_2 should be decreased and K_1 increased to improve the noise factor for the circuit. Because we must match the temperature response of the reference and measuring elements to reduce error from system thermal variations, K_2 is fixed at 1.0. Increases in K_1 increase the signal for a fixed power input and decrease the bridge noise factor.

A detector noise factor is defined similarly to the bridge noise factor, the ratio of the square of the input and output signal-to-noise voltage ratios.

$$F_D = \frac{V_{SB}^2/V_{nB}^2}{V_{SD}^2/V_{nD}^2} \tag{30}$$

where V_{SD} = signal voltage at output of detector of bandwidth Δf

V_{nD} = r.m.s. noise voltage at the output of the detector of bandwidth Δf

The actual peak to peak noise voltage rarely exceeds six times the r.m.s. noise voltage. Detection of a single observation with reasonable accuracy requires that the signal voltage at the detector output at least exceeds the possible peak noise voltage. The phase reversal technique of the phase sensitive detector doubles the signal voltage with respect to noise so detection with a single observation only requires that the signal voltage exceeds 3 times the r.m.s. noise voltage. For phase sensitive detection, the minimum signal to noise ratio is given by

$$\frac{V_{SD}}{V_{Sn}} = 3 \tag{31}$$

Combining Eqs. (19), (20), (21), (30), and (31), we get for the minimum $\frac{\Delta R}{R}$ measurable

$$\left(\frac{\Delta R}{R}\right)_{min} = 3 \left(\frac{F_D F_c 4k\ T\ \Delta f}{P_T}\right)^{1/2} \tag{32}$$

The temperature coefficient, α, for a resistance thermometer or thermistor is given by

$$\alpha = \frac{1}{R}\ \frac{dR}{dT} \approx \frac{1}{R}\frac{\Delta R}{\Delta T}$$

Rearranging

$$\alpha \Delta T = \frac{\Delta R}{R} \tag{33}$$

And substituting in Eq. (32) gives:

$$\Delta T = \frac{3}{\alpha}\left(\frac{F_D F_c 4kT\ \Delta f}{P_T}\right)^{1/2} \tag{34}$$

For a reference temperature of 20°C, the relation for the minimum measurable temperature change is:

$$\Delta T = \frac{3.84\text{x}10^{-10}}{\alpha} \left(\frac{F_c F_D \Delta f}{P_T} \right)^{1/2} \tag{35}$$

The value of the temperature coefficient of resistance α is fixed by the choice of the measuring element and bridge design consideration set a lower limit of about 2.02 for F_c, the bridge noise factor. The value of F_D, the detector noise factor, depends on the choice of detector. The PAR model HR-8 lock-in amplifier (low-noise tuned amplifier and phase sensitive detector) has an F_D value as low as 1.12. Power dissipation is limited by the resulting temperature rise in the measuring element and hence, the power dissipation characteristics of the element. The bandwidth is limited by the detector and the power spectrum of the signal. The PAR HR-8 has a minimum bandwidth of 0.0025 cps, however, what we gain on improved signal to noise we lose in signal strength since high frequency components of the signal power spectrum are attenuated at narrow bandwidths. As shown in Fig. 3, a typical expected signal decays exponentially with a time constant of about 0.1 sec. Decreasing the bandwidth to less than the reciprocal time constant of the exponentially decaying signal will not improve the signal to noise ratio and hence gives a negligible increase in detectability.

Thin Film Thermistors

Thermistors in the form of thin films of mixed oxides either free standing or on a substrate backing have recently become available.[12] These devices combine the typical high temperature coefficient of thermistors with a very low ratio of mass to surface area which permits location very near the metal surface. The low mass to surface area also results in improved

heat dissipation characteristics and fast response. The physical properties of a thin film thermistor is given in Table II along with those of a bead thermistor. The heat dissipation of the film thermistor is more than 20 times better than with the bead thermistor and the response time is considerably better.

The allowable power dissipation may be found for the heat dissipation constant γ and the allowable rise in temperature of the thermistor. Since we must measure 10^{-5}°C, the temperature increase from power dissipation, ΔT_p, must be limited to about 10^{-7}°C to prevent significant error from changes in the rate of power dissipation when the surface is immersed. Allowable thermistor power dissipation is then

$$P_T = \gamma \Delta T_p \tag{36}$$

where

P_T = allowable thermistor power dissipation in watts

γ = power dissipation constant in watts/°C (= 2×10^{-3})

ΔT_p = temperature increase in thermistor from power dissipation (= 10^{-7}).

For the thin film thermistor use of the above values results in

$$P_T = 2.0 \times 10^{-10} \text{ watts}$$

Using the following values with Eq. (35)

ΔF = .1, cycles/sec

F_c = 2.01

F_D = 1.15

α = .04, ohms/ohms/°C

P_T = 2.0×10^{-10}, watts

Table II. Physical Properties of Thermistors and Resistance Thermometers

	VECO Thinistor[12] (thin film thermistor on Nickel Foil Substrate)	VECO Bead Thermistor[12] (ultra small)	Thin Film Resistance Thermometer (Nickel)
α = temperature coefficient in ohm/ohm/°C	0.039 to 0.044	0.032 to 0.048	.006
γ = Power dissipation constant in Watts/°C (depends on Medium)	2×10^{-3} (estimate for still water)	9×10^{-5} (still water)	6×10^{-2} (estimate for still water)
τ = time constant in sec. (time required to reach 63.5% of final temperature with step change)	0.0001 to 0.0005	0.5	0.0001 (estimated)
size	film depth .0005 cm foil depth .025 cm surface area .1 cm^2	Oval shaped bead .1 mm x .2 mm	film depth 1×10^{-5} cm Surface Area 4.5 cm^2
Resistance in K ohms	0.1 to 1,000	1.0 to 1,000	~ 10

for the minimum temperature measurable we obtain

$$\Delta T_m = \frac{(3.84\text{x}10^{-10})}{.044} \left[\frac{(2.01)(1.12)(.1)}{2.0\text{x}10^{-10}} \right]^{1/2}$$

$$= 2.9\text{x}10^{-4}\ ^\circ\text{C}$$

The only significant method to improve this figure lies in increasing the thermistor power. This can be accomplished by using many thermistors in series or allowing a larger power dissipation in one thermistor. Since the amount of power dissipated is in direct proportion to the number of thermistors, more than 800 thermistors would be needed under the above conditions to reach a minimum measurable temperature of 10^{-5}°C.

A promising approach to improve the smallest measurable temperature lies in allowing a somewhat larger error from increased power dissipation and using a reasonable number of thermistors. From heat transfer dynamics we would estimate the temperature decrease in the thermistor temperature from heat dissipation changes upon immersion of the surface to be about 30% of the actual temperature increase, ΔT_p, due to power dissipation. If we allow ΔT_p to equal the minimum measurable temperature, ΔT_m, the error introduced would be at most about 30%. Taking into account the use of n thermistors with the resultant increase in allowable power dissipation and letting $\Delta T_p = \Delta T_m$. Eq. (35) becomes:

$$\Delta T_m^{3/2} = \frac{3.84\text{x}10^{-10}}{\alpha} \left(\frac{F_c F_D\ \Delta f}{n\gamma} \right)^{1/2}$$

$$\Delta T_m = \left(\frac{3.84\text{x}10^{-10}}{\alpha} \right)^{2/3} \left(\frac{F_c F_D \Delta f}{n\gamma} \right)^{1/3} \tag{37}$$

Using the same values of α, F_c, F_D, and γ as before and using 25 thermistors we get

$$\Delta T_m = 1.2\text{x}10^{-5}\ ^\circ\text{C}$$

the estimated error for immersion in water would be about 30%.

Bead Thermistors

Bead thermistors sense the average temperature across the bead with a first-order-lag time constant of about .5 sec. Since temperature is highest at the metal surface, and decreases into the depth of the base material, the bead thermistor, which averages the temperature to some depth, will give a lower signal amplitude for the same energy release than the thin film thermistor at the surface. Using the constants for the bead thermistor (Table II) and the values for F_c, F_D, Δf, and ΔT_p, that were used to calculate ΔT_m for the thin film thermistor: the allowable power dissipation in the thermistor is found to be

$$P_T = 9\text{x}10^{-12}\ \text{watts}$$

and

$$\Delta T_m = 4.0\text{x}10^{-3}$$

This limit could also be improved by using many thermistors in series and increased power dissipation in each.

Thin Film Resistance Thermometers

The technology of thin film deposition permits the fabrication of resistors which consist of a uniform thin film of metal which covers a plane surface. We shall consider a nickel film since this technology is available. The power dissipation from a thin film resistor will be about the same as

from a thin film thermistor of the same area since the substrate heat transfer properties are dominant in both cases. However, the thin film resistor will cover 20 to 50 times more area than the thermistor for the same resistance. Calculations based on the heat transfer properties of the epoxy base and the water contacting the metal surface gives an estimate of 30 for the power dissipation constant of an element with a 4.5 cm^2 surface area. Since the resistance film will be located very near the surface and its mass to surface area is similar to that of the thin film thermistor, response times will be about the same, in the order of .1 millisec. A calculated estimate gave .13 millisec. Other properties of the thin film nickel resistor are given in Table II. Using these estimated properties in Eq. (35) with the same circuit and detector noise factors (F_c = 2.02, F_D = 1.15) that were used for the ΔT_m calculation for the thin film thermistor, we get

$$P_T = 6.0\text{x}10^{-9}$$

$$\Delta T_{min} = 7.0\text{x}10^{-4}\,°C$$

The above minimum temperature is about twice the minimum for a single thin film thermistor. This limit could be improved by using a larger surface area or a material with a larger temperature coefficient than nickel.

Area Thermopiles

Area thermopiles combined with the heat burst microcalorimetry techniques of Benzinger and Kitzmer[1] have some distinct advantages in the measurement of heat effects on plane surfaces. With "heat burst" calorimetry, heat is conducted rapidly away from the surface through a thermopile to a heat sink held at constant temperature. Temperature variations in the sink are damped out by using a dummy opposing thermopile which senses sink temperature. Since the

heat is invariably conducted away by the fluid contacting the metal surface, measuring a rapid heat transfer rate fits well into the dynamics of the heat transfer. The principle disadvantage is response time. The heat burst principle would be adapted to measure heat effects on plane surfaces by depositing an insulated metal film surface on the area thermopile. The amount of heat energy flowing through the thermopile will be a function of the relative heat transfer properties of the fluid contacting the surface and the thermopile. Benzinger and Kitzenger measured energy releases as low as 7.5×10^{-4} cal using an area thermopile with 10,000 junctions of constantan and copper-plated constantan. The junctions consisted of 0.01 inch diameter constantan wire coiled on 1/8 in. polyethelene tubing with one side of the coil plated with copper. Response time was about 1 minute for 63.5% of the maximum change. Since some of our heat is transferred into the fluid, we must measure less than 100 ergs/cm^2 or 2.39×10^{-6} cal/cm^2. Assuming a 10 cm^2 surface, we still must increase the sensitivity of the pile by a factor of 75. In addition, we must improve the time response to sense our rapidly decaying signal. Reducing the wire diameter and using more junctions would be one method of increasing sensitivity and time response. However, we would also increase the resistance of the wires and the effect of thermal noise in the circuits. Another method would be to use thermocouple materials which give larger output per unit temperature difference between the hot and cold junction. The feasibility of these approaches, however, have not been demonstrated as yet.

IV. SUMMARY

The temperature decay curves in Fig. 3 show that the determination of typical reaction enthalpies on plane surfaces requires the measurement of temperature changes in the order of 10^{-5}°C. Since one cannot separate the effect of the heat released at the surface and that dissipated in the measuring element, the possible temperature change due to power dissipation has been limited in this study to less than one percent of that from the interfacial effect. With this assumption, one could measure only as low as 2.9×10^{-4}°C using the best temperature sensor presently available, a thin film thermistor in an AC bridge. It has to be concluded, therefore, that temperature sensors are not available which will measure the heat effects on a plane surface with errors of no more than a few percent. By allowing a temperature rise in the thermistor due to power dissipation to equal the least measurable temperature, and using 25 thermistors with Eq. (37) the least measurable temperature change is 1.2×10^{-5}°C (Eq.(37)). Hence an instantaneous heat release of 100 ergs/cm^2 on a plane surface could just barely be detected. The heat effects for a climbing liquid film or for slower immersion of the surface result in changes which are well below the measurable range.

ACKNOWLEDGEMENT

This work was performed under the auspices of the United States Atomic Energy Commission.

REFERENCES

1. A. C. Zettlemoyer and J. J. Chessick, "Wettability Heat of Immersion", in Contact Angle, Wettability and Adhesion, Advances in Chemistry Series, No. 43, American Chemical Society, Washington, D. C. (1964).

2. I Chavet, "High Detectivity Calorimeters", J. Sci. Instr. 40, 391 (1963).

3. T. H. Benzinger and C. Kitzinger, "Microcalorimetry, New Methods and Objective", in Temperature, Its Use and Control In Science and Industry, Vol. 3, Part 3, Reinhold, New York (1964).

4. R. La Force, S. Ravitz, and W. Kendall, "Device for the Precise Measurement of Small Temperature Changes," Rev. Sci. Instr. 35, 6, 729-732 (1964).

5. H. Carslaw and J. Jaeger, Conduction of Heat in Solids, 2nd Ed., Oxford University Press, London (1959); p. 256.

6. E. Jahnke and F. Ende, Table of Functions, 4th Ed., Dover Press, New York (1945), page 48.

7. H. Carslaw and J. Jaeger, Conduction of Heat in Solids, 2nd. Ed., Oxford University Press (1945), p. 364.

8. Ibid., p 267

9. C. H. Miller and B. E. Phil, "Precision Resistance Measurements Using Very Low Frequency Alternating Current", Proc. IEE, Vol. 112, No. 3, March 1965, p. 557.

10. C. H. Miller and B. E. Phil, "Limits of Accuracy in Resistance Measurements", Proc. IEE, 1962, Vol. 109C, p. 299.

11. D. Bartholonew, Measurements and Instrumentation, Allyn and Bacon, Inc., Boston (1963), p. 175.

12. VECO Technical Bulletin, MFN 171 (1965), Victory Engineering Corporation, Springfield, New Jersey.

13. F. Precopio, M. Cohen, A. Zarist, Modern Materials, H. Hausner, ed., Vol.3, Academic Press, New York (1962), p. 81.

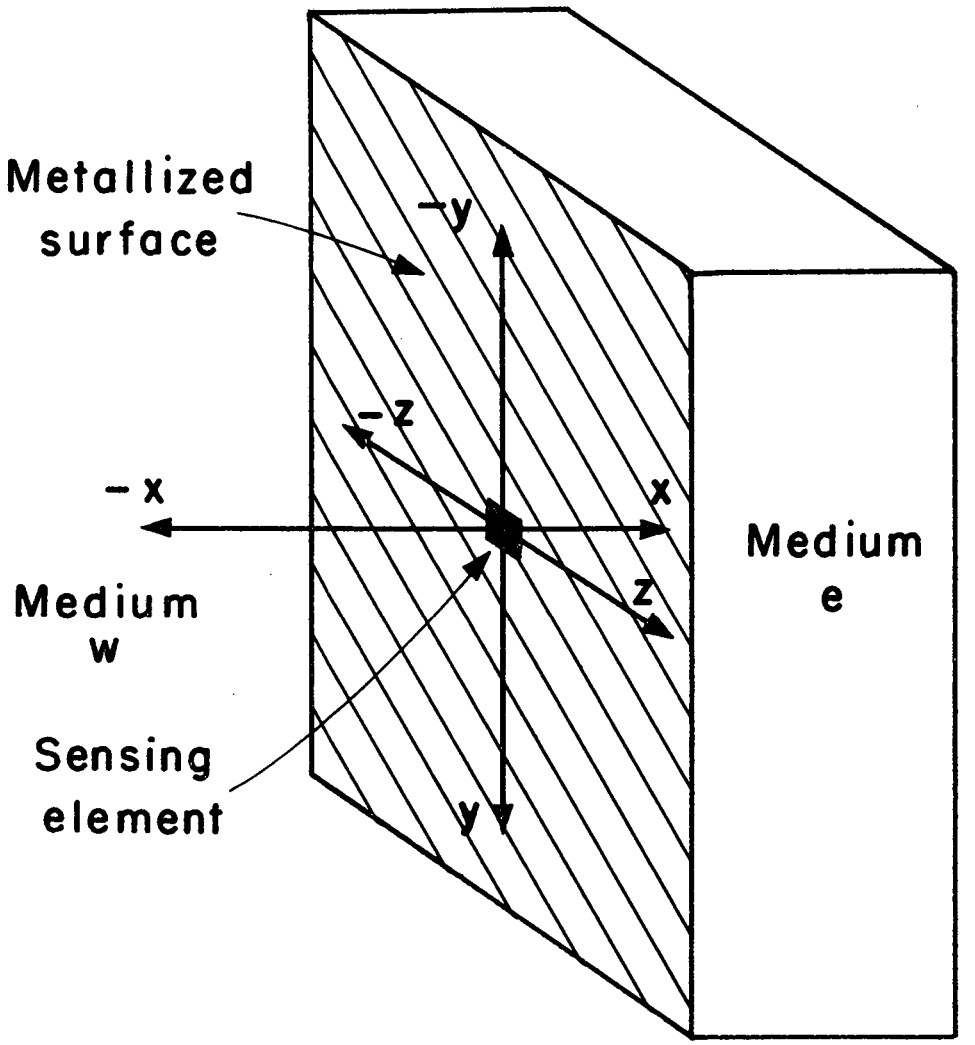

MUB-8850

Fig. 1. Coordinate system for plane heat source. Medium w = water or air, medium e = epoxy base, heat released in shaded plane.

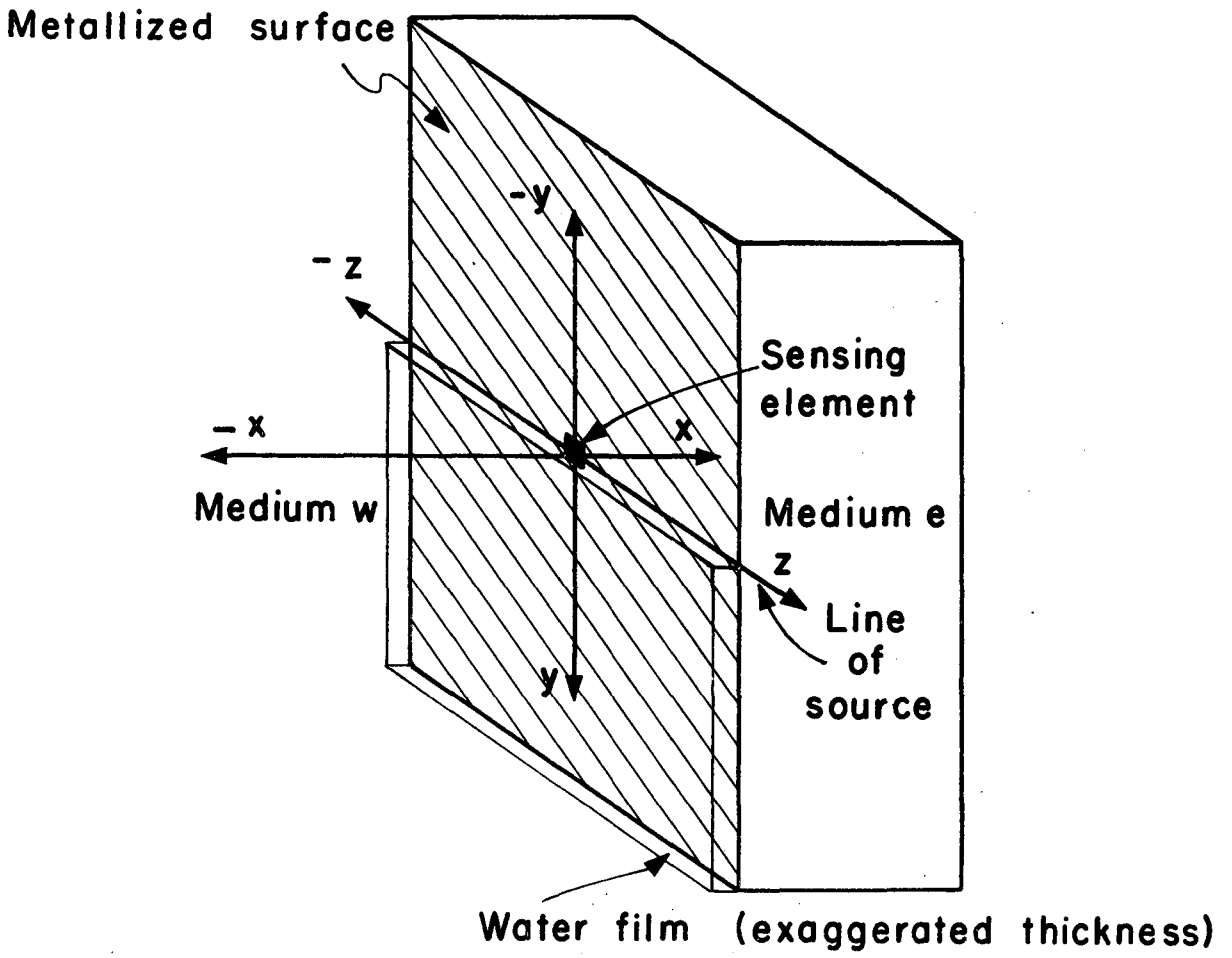

Fig. 2. Coordinate system for moving line source. Heat released along z-axis, thickness of water film exaggerated.

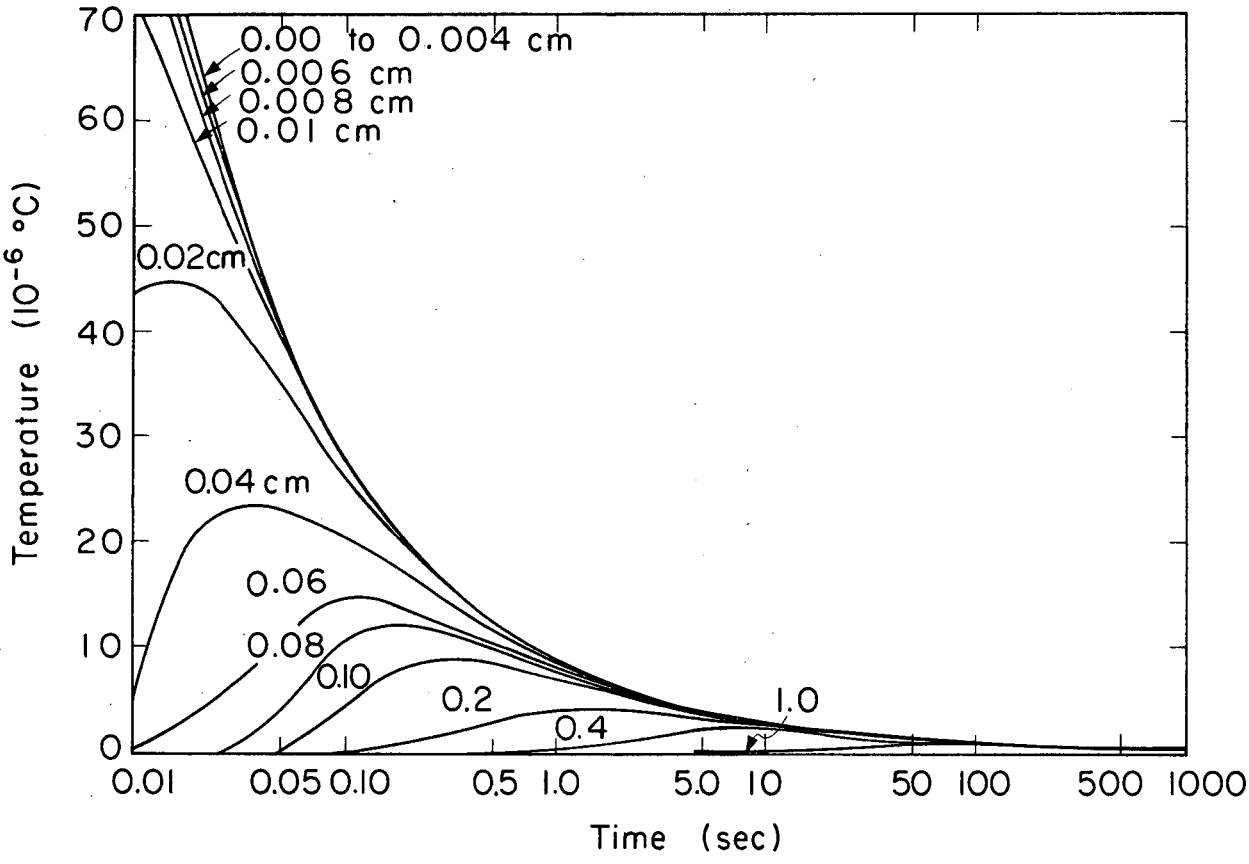

MUB-8852

Fig. 3. Temperature decay in epoxy base, plane heat source of strength 100 ergs/cm^2. Parameter: distance from metal surface in cm.

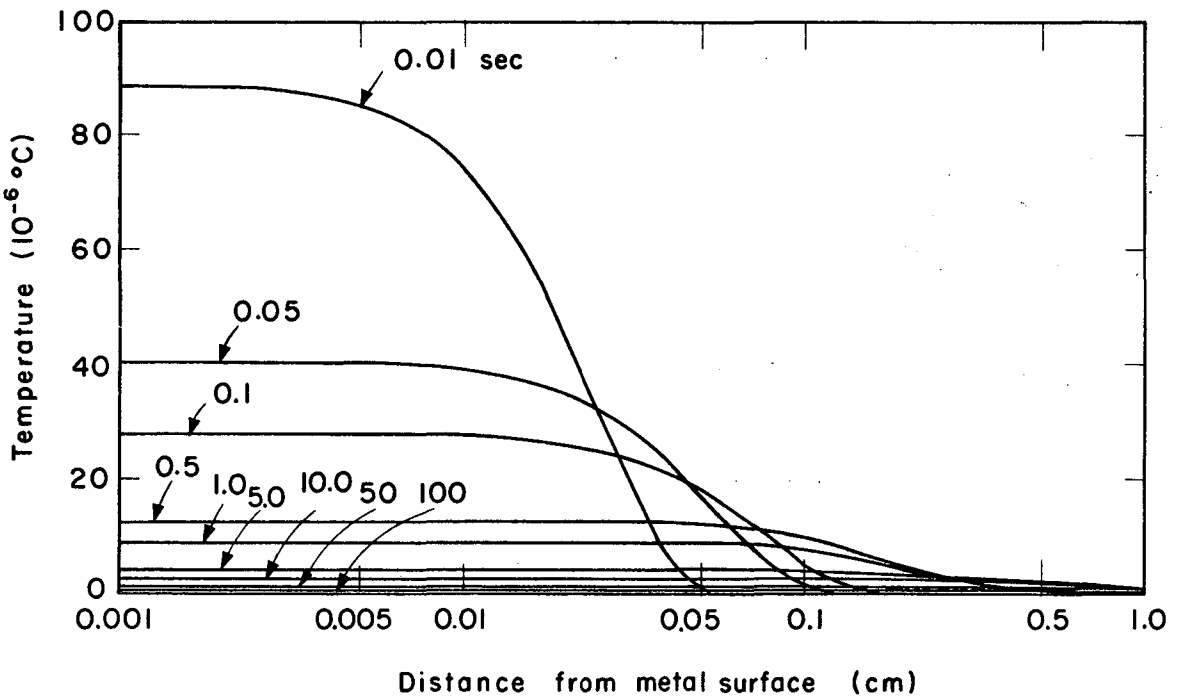

MUB-8853

Fig. 4. Temperature decay in epoxy base, plane heat source of strength 100 ergs/cm^2. Parameter: time in seconds.

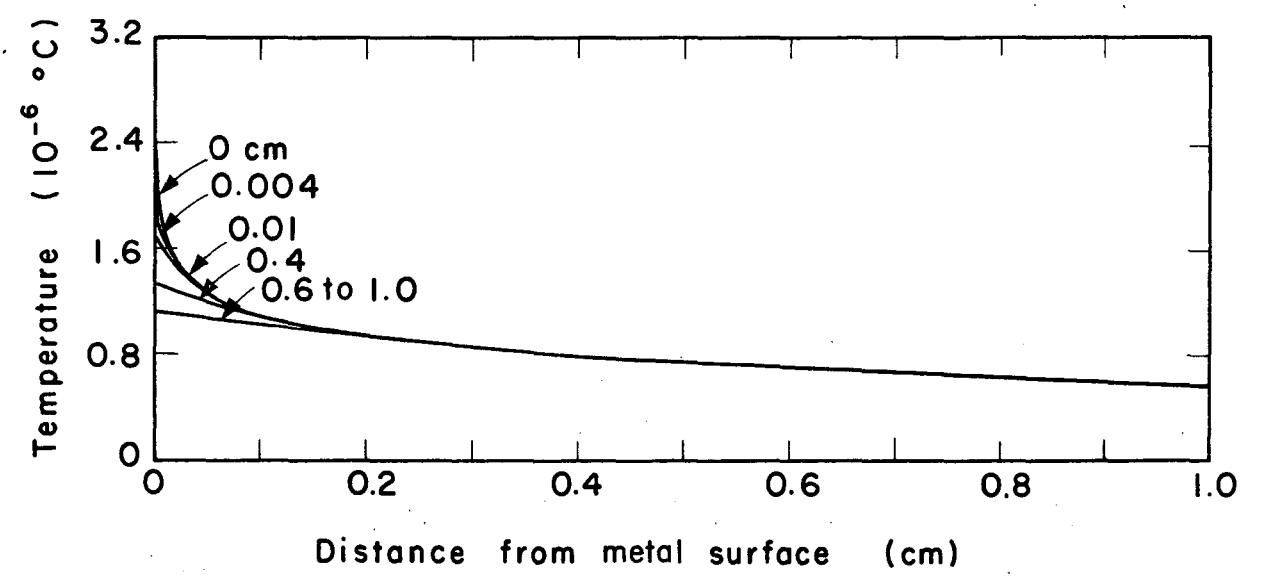

MUB-8854

Fig. 5. Temperature decay in epoxy base from a moving continuous line source of strength 2.77×10^{-2} ergs/(sec)(cm). Velocity = 1 cm/hr. Heat assumed to dissipate only into the epoxy base. Parameter: distance from line source in cm measured along the surface.

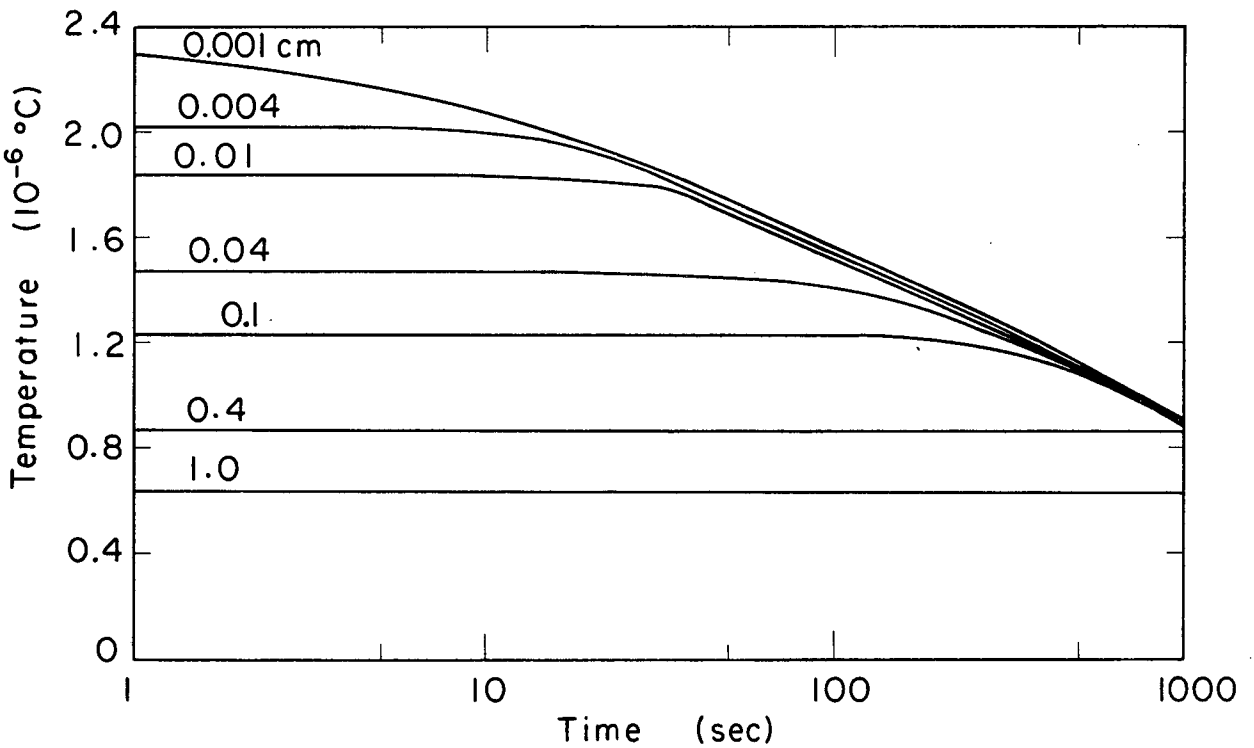

MUB-8855

Fig. 6. Temperature decay in epoxy base from a moving continuous line source of strength 2.78×10^{-2} ergs/(sec)(cm). Velocity = 1 cm/hr. Parameter: distance from metal surface in cm. Perfect insulation assumed toward the air-water medium.

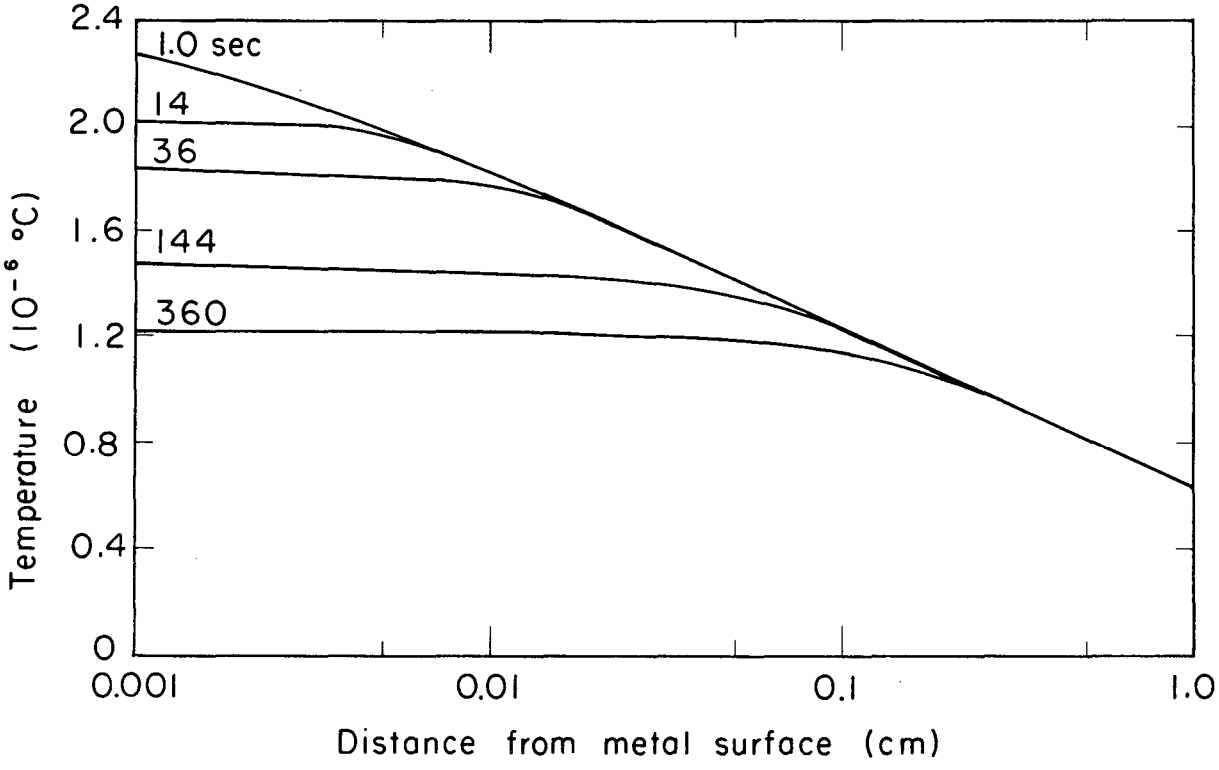

MUB-8856

Fig. 7. Temperature decay in epoxy base from a moving continuous line source of strength 2.78×10^{-2} ergs/(sec)(cm). Velocity = 1 cm/hr. Perfect insulation assumed toward the air-water medium. Parameter: time in sec.

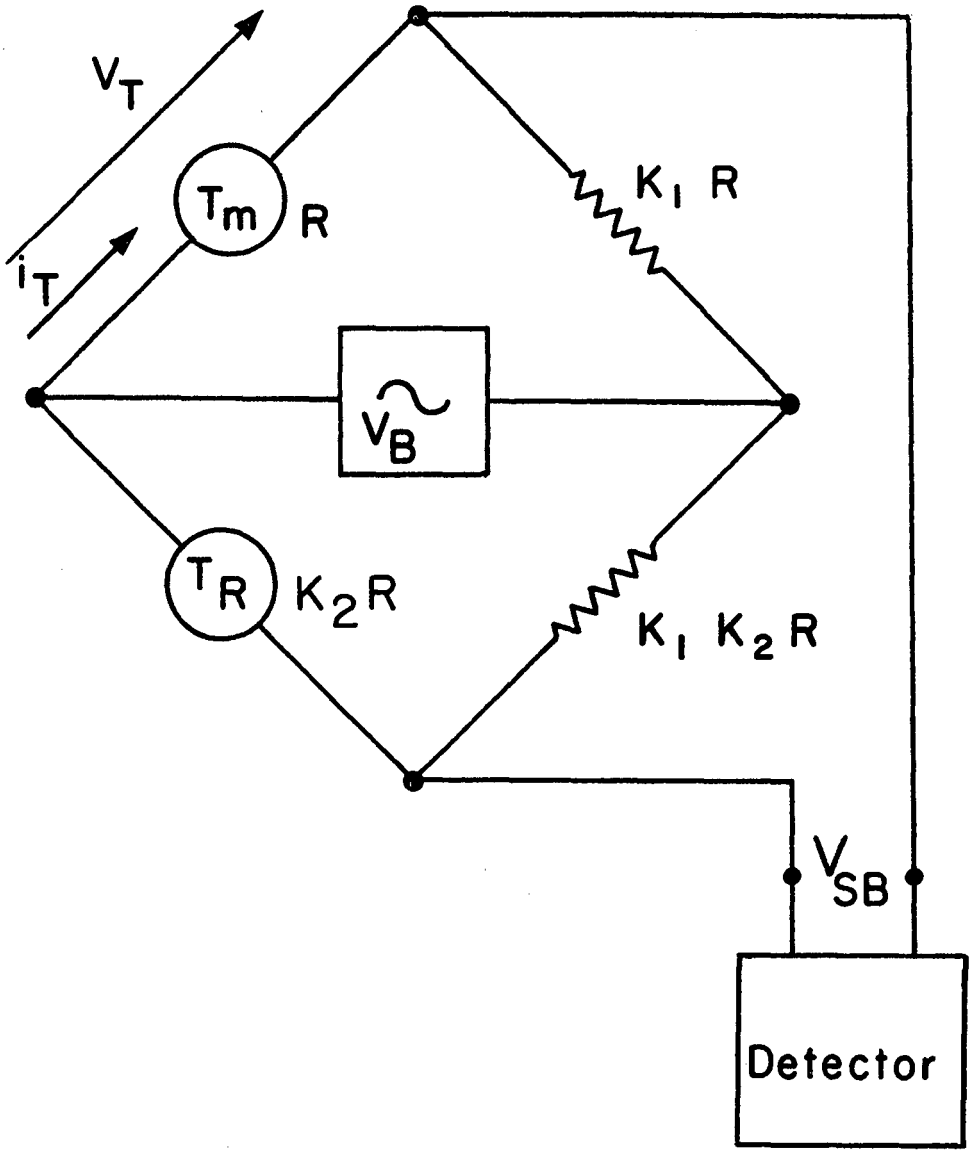

MUB-8857

Fig. 8. Bridge circuit for temperature measurement.

V_B = Bridge excitation voltage

V_I = Voltage drop across measuring element T_M

V_{SB} = Signal voltage at bridge output

R = Resistance of measuring element T_M

K_2R = Resistance of reference element T_R

K_1R = Resistance of bridge resistor

K_1K_2R = Resistance of bridge resistor

This report was prepared as an account of Government sponsored work. Neither the United States, nor the Commission, nor any person acting on behalf of the Commission:

A. Makes any warranty or representation, expressed or implied, with respect to the accuracy, completeness, or usefulness of the information contained in this report, or that the use of any information, apparatus, method, or process disclosed in this report may not infringe privately owned rights; or

B. Assumes any liabilities with respect to the use of, or for damages resulting from the use of any information, apparatus, method, or process disclosed in this report.

As used in the above, "person acting on behalf of the Commission" includes any employee or contractor of the Commission, or employee of such contractor, to the extent that such employee or contractor of the Commission, or employee of such contractor prepares, disseminates, or provides access to, any information pursuant to his employment or contract with the Commission, or his employment with such contractor.