Submitted to Health Physics as a Note

UCRL-16482 Rev.
Preprint

Cy. 2

ENVIRONMENTAL RADIATION TELEMETRY SYSTEM

H. S. Dakin and L. D. Stephens

NOV 19 1969

LIBRARY AND
DOCUMENTS SECTION

September 18, 1969

AEC Contract No. W-7405-eng-48

TWO-WEEK LOAN COPY

This is a Library Circulating Copy
which may be borrowed for two weeks.
For a personal retention copy, call
Tech. Info. Division, Ext. 5545

LAWRENCE RADIATION LABORATORY
UNIVERSITY of CALIFORNIA BERKELEY

UCRL-16482 Rev.
Cy. 2

DISCLAIMER

This document was prepared as an account of work sponsored by the United States Government. While this document is believed to contain correct information, neither the United States Government nor any agency thereof, nor the Regents of the University of California, nor any of their employees, makes any warranty, express or implied, or assumes any legal responsibility for the accuracy, completeness, or usefulness of any information, apparatus, product, or process disclosed, or represents that its use would not infringe privately owned rights. Reference herein to any specific commercial product, process, or service by its trade name, trademark, manufacturer, or otherwise, does not necessarily constitute or imply its endorsement, recommendation, or favoring by the United States Government or any agency thereof, or the Regents of the University of California. The views and opinions of authors expressed herein do not necessarily state or reflect those of the United States Government or any agency thereof or the Regents of the University of California.

UCRL-16482 (Rev.)

ENVIRONMENTAL RADIATION TELEMETRY SYSTEM

H. S. Dakin and L. D. Stephens

Lawrence Radiation Laboratory
University of California
Berkeley, California

September 18, 1969

ABSTRACT

Centralized monitoring and recording of accelerator-produced radiation fields at points within the Lawrence Radiation Laboratory's Berkeley site is done by a telemetry system which began operation in 1964.

Using standard telephone lines, the system collects data simultaneously from all points, giving both the rate and the time-integrated intensity of radiation at each point. At the collection stations conventional counting equipment is used in conjunction with a simple device which converts scaler decade output signals into a form which is transmitted over telephone lines and which directly activates electromechanical event-recorder movements and impulse counters.

Transmission of signals from two consecutive decades of a single scaler at a remote station over a single telephone line makes it possible to record a wide range of radiation intensities, extending over several orders of magnitude.

For special applications apart from the regular operation of the system, telephone lines transmit 5 -μsec pulse signals and small count-rate metering currents with noise interference practically eliminated by means of ground isolation and common-mode rejection techniques.

INTRODUCTION

Radiation levels at several locations around the Lawrence Radiation Laboratory (LRL) are continuously monitored and recorded at a central location by means of a telephone-line telemetering system which began operation in 1964. The "Environmental Radiation Telemetry System" (ERTS) has ten transmitting stations, including four located along the LRL site boundary; others are near LRL accelerators, including the Bevatron, Heavy Ion Linear Accelerator (Hilac), 184-Inch Cyclotron, and 88-Inch Cyclotron.

Under certain operating conditions, any one of these accelerators may have a stray radiation field which can be detected at distances as far as a few thousand feet. This means that the radiation intensity at a given location and time may consist of contributions from any or all of these accelerators.

Attempts to understand and predict the Laboratory's stray radiation field have in the past required combinations of stationary detectors and counting equipment that could not be read simultaneously. Many series of measurements were made with mobile counting equipment; each series lasted for a few hours and was scheduled during the infrequent times when only one of the accelerators was operating at a constant beam level.

The system described here has made possible continuous measurement and permanent indication of both the rate and the time-integrated intensity of radiation exposure. It also provides a means for rapid determination of the relative contributions of each of the several accelerators to the total radiation environment by making use of short and frequent accelerator maintenance shutdown periods during which radiation levels at remote locations are studied under different combinations of accelerator operating conditions.

A map of the LRL Berkeley site, Fig. 1 shows the locations of ERTS transmitting and recording stations. In addition to the central recording station (Fig. 2) at Building 72, there is currently one secondary recording station, at the 184-Inch Cyclotron. This secondary station provides detailed information, not sent over telephone lines, about the radiation intensity at several points within the accelerator building. Four of the transmitting stations are located on the Laboratory site boundary, in small houses known as environmental monitoring stations. Each of these stations contains special equipment for collecting rainfall and dust samples, and various types of radiation detectors, including a moderated BF_3 proportional neutron-flux counter,[1] a cobalt-disk neutron-flux integrator, and an energy- compensated Geiger counter. Information obtained from these detectors is compiled and reported every six months, to help to ensure the Laboratory's compliance with Federal regulations on radiation exposure to persons outside the Laboratory site. Since most of the biological dose from radiation produced by accelerators comes from neutrons, the moderated BF_3 counter was found to be the most useful single indicator of radiation exposure for telemetering purposes.

DESCRIPTION OF EQUIPMENT

The components of a typical remote monitoring station and those in the central recording station are shown in block diagram form in Fig. 3. The central recording station contains two Esterline-Angus "event" recorders which indicate the time of occurrence of a pulse sent to any of a total of 30 channels. The number of pulses in each of

the first 20 channels is indicated on a panel containing 20 electromechanical impulse counter or register units (20-channel register panel). A patch panel provides semipermanent connections between the recorders and register units and the telephone line terminal block.

In a typical monitoring station, a moderated BF_3 detector, with a preamplifier and associated high-and low-voltage power supplies, sends small negative pulses to an inverting pulse amplifier with adjustable gain. The output of this amplifier goes to a discriminator/scaler. From two consecutive scaler decade output connections, shown as 10^3 and 10^2 in Fig. 3, cables lead to a two-channel pulse converter, each channel of which produces a 60-V- 40 msec pulse when it is triggered by a decade output pulse from the scaler. The pulse converter outputs are connected to the two conductors of a twisted-pair telephone line leading to the recording station.

Chart Recorder and Register Panel

The 20 channels of a conventional event recorder,[2] and the 20 panel-mounted electromechanical impulse counter or "register" units[3] respond to signals from ten remote transmitting stations. By transmitting two consecutive scaler decade output pulses to corresponding recorder and register channels for each transmitting station, it is possible to record radiation measurements over a range of intensity of several orders of magnitude. For example, on this sample chart recording for a 12-hour period (Fig. 4), a single pulse in channel 5 corresponds to 10^3 counts from the detector, but a pulse in channel 6 corresponds to 10^2 counts from the same detector.

To translate the chart recorder and register panel readings into either time-integrated or time-rate neutron flux, n/cm^2 or n/cm^2 sec,

we must observe the scaling factors and the detector calibration data. A table indicates the location of the transmitting station which corresponds to each pair of recorder channels, and the radiation exposure in n/cm^2 which is indicated by a single pen marking in any of the 20 channels.

A second chart recorder having 10 instead of 20 channels is used occasionally for special purposes. This recorder can be operated at a faster chart speed than the other, to permit detailed observation of radiation level variations at selected locations over a short time.

A patch panel, containing 80 type-83 coaxial connectors is located at the receiving terminal which allows 40 channels (20 transmitting stations) to be connected in any desirable way.

Telephone Lines

The transmitting and recording stations are connected by means of No. 26 twisted-pair telephone lines which are leased from the Pacific Telephone Company. These lines are electrically the same as those used in ordinary telephone voice communication, but for telemetering purposes they are provided as direct uninterrupted connections, and do not go through any dialing or switching apparatus. The two channels of information from a single ERTS transmitting station use the two conductors of one telephone line, with existing electrical grounding acting as a current return path. When the ground is so used, there is considerable noise on the line, because of the absence of a common-mode rejection effect which is present when a twisted-pair line is used as the complete circuit. However, this line noise is small compared to the power needed to operate the recording and register movements at the receiving station.

Moderated BF_3 Detectors

The BF_3 proportional counter neutron detectors used with ERTS recording equipment are fitted with a 2-1/2 inch paraffin moderator surrounded by a cadmium lining. This type of detector has a response that is proportional to neutron flux intensity with a nearly flat energy dependence curve over the range 0.020 to 20 MeV.

For health protection purposes, it is necessary to express radiation exposure in biological dose units, or "rems." Calculation of shielding requirements, and the evaluation of shielding effectiveness must, on the other hand, deal with physical quantities such as flux intensity and neutron energy distribution to describe physical interactions within shielding materials.

Therefore a radiation monitoring instrument must have a response that can be interpreted either directly or indirectly in both physical and biological units. For practical reasons we have found it preferable to make radiation measurements in physical units, using a wide variety of different detectors when necessary, and then estimating the equivalent biological dose in rems with the help of data such as the International Commission on Radiation Protection's recommended neutron dose/flux conversion relation.[5]

In other applications, for which it might be preferable to record radiation exposure in approximate biological units, the moderator thickness around the BF_3 detector could be adjusted to give the detector a response that nearly compensates for the change in neutron energy and the ratio.

$$\frac{\text{biological dose, rems}}{\text{unit neutron flux, n/cm}^2}.$$

The BF_3 detector detects neutrons by the reaction $^{10}B(n,\alpha)^{7}Li$, producing pulses 10 to 300 mV high and 100-500 nsec long. The frequency of their occurrence indicates the thermal-neutron flux intensity at the detector, and, indirectly, either the fast-neutron flux intensity or the approximate fast-neutron biological dose rate at the outside of the moderator, depending upon the moderator thickness.

Before the pulses can be made to operate a conventional pulse-height discriminator and scaler, they must be amplified 100 times or more and inverted in polarity. This is accomplished by a low-gain non-inverting preamplifier located at the detector and a variable-gain inverting amplifier located near the discriminator and scaler.

Pulse Amplifier and Scaler

The preamplifier[6] used with the BF_3 proportional counter is a three transistor direct-coupled voltage amplifier with a moderate input impedance (2400 ohms) and a low output impedance that is matched to a 50-ohm coaxial cable by an external 51-ohm resistor. Unusually low values of detector anode load resistance and input coupling capacitance make it possible for the detector/preamplifier assembly to produce short pulses, 0.1 to 0.5 μsec in length, as compared with pulse lengths of 1 to 5 μsec. which are obtained when one follows the usual practice of using high values of load resistance, coupling capacitance, and preamplifier or emitter-follower input impedance. The advantage of reduced pulse length at the preamplifier output is that it allows effective use of fast (5 MHz and higher) discriminating and scaling equipment, and greatly increases the range of radiation intensities over which a particular radiation detector can be used.

The scaler has special connections to provide an output pulse from

each decade. However, the output pulses are too short for transmission over telephone lines, and the output circuitry in the scaler is not protected against accidental transient voltages which may appear on the line. Therefore the pulses are changed from 4 V in height and 0.2 μsec in length to 60 V and 40 msec by means of a two-channel pulse converter, which is shown schematically in Fig. 5.

Pulse Converter

Each channel of the pulse converter[8] consists of a monostable multivibrator coupled to an emitter follower to drive the load. The circuits are protected against damage due to accidental high voltages or short circuits on the telephone line by a network of diodes, resistors, and capacitors at the output of each channel. Temperature stability of the circuit was found to be adequate over the entire range between -10^0 and 65° C. The output pulse is rectangular, with a normal height of 60 V and a length of 40 msec. The pulse height can be increased to a maximum of 75 V, limited by the Zener breakdown voltage of CR 9 (Fig. 5), by increasing the ac input supply voltage from 120 to about 140 V; it is necessary to do this for an unusually long line of about 6 miles, leading from the Panoramic Way monitoring station to the telephone company's downtown Berkeley exchange system, then to the LRL exchange, and to Building 72. For much longer lines it might be necessary to use a second pulse converter at the receiving station, to act as a repeater.

TRANSMISSION OF FAST PULSES

In special applications we have used parts of the telephone line network to directly transmit 5-10 μsec pulses from a detector over the line, rather than scaling these pulses and transmitting the much longer 40 msec pulses used in normal ERTS recorder operation. The need

to do so arises when it is desirable to observe pulses for height or time distribution directly as they come from a detector, and to perform scaling or other operations at the receiving end of the line.

Because the telephone lines are intended and normally used only for audio-frequency signals as high as 3000 Hz, one would expect to encounter some difficulty in transmitting 5-μsec pulses because of attenuation and unwanted noise interference in the line. A method found to be quite successful as a solution to this problem is shown in Fig. 6. One side of the line is grounded at the transmitting end. At the receiving end, the line is isolated from the ground. The two conductors of the line at the receiving end go to opposite ends of a pulse transformer winding. The output appears at the ungrounded end of the secondary winding. Noise picked up by the line from external sources is practically eliminated by common-mode rejection, or cancellation of all signals which appear simultaneously on both conductors of the telephone line. A 20-V pulse is applied to the transmitting end of the line for an output pulse at the receiving end of a few hundred mV, which can be amplified by conventional means.

TRANSMISSION OF METERING CURRENTS

We used a similar method, shown in Fig. 7 to transmit small metering currents of 0 to 200 μA from a logarithmic count-rate meter[9] at the 184-Inch Cyclotron to the Building 72 receiving station. Again, only the transmitting end of the line has one conductor grounded. At the receiving end, both the line and the meter are isolated from ground, to avoid a ground loop which could cause erratic signals. Diodes CR 1 and CR 2 protect the meter against accidental overload

If one needs to know only the instantaneous rate of radiation exposure and not the quantity of time-integrated exposure, and if simultaneous recording of many channels is not needed, it is practical to design a telephone-line telemetering system with remote meters

operating from a logarithmic count-rate indicating circuit. This has been done on a small scale at both the 184-Inch Cyclotron and the 88-Inch Cyclotron, to permit visual monitoring of neutron flux intensity over a 3-decade or in some cases 5-decade range at various points within the accelerator building, using coaxial cable rather than telephone lines. Recording of selected individual channels is done by means of 1-mA chart recorders equipped with logarithmic chart paper.

SUMMARY

More than 5 years of virtually trouble-free continuous operation of the entire Environmental Radiation Telemetry System indicate that it can be expected to operate reliably with little or no maintenance after the initial installation, other than periodic checks of counter calibration.

ACKNOWLEDGMENTS

The work described in this report involved the help and participation of members of the following groups at LRL: Health Physics, Physics Technical Support, Electronic Fabrication, Accelerator Technicians, and Construction and Maintenance Administration. Members of the technical staff of the Pacific Telephone Company provided helpful information and suggestions on the use of the Company's special-service lines.

REFERENCES

1. B. J. Moyer, Survey Methods for Neutron Fields, Lawrence Radiation Laboratory Report UCRL-1635 (1952); or A. R. Smith, The Stray Radiation Field of the Bevatron, Lawrence Radiation Laboratory Report UCRL-8377 (1958).

2. Esterline Angus Instrument Company, Inc., Indianapolis, Indiana, Series A Recorders Catalog No. 6417 (1964).

3. Landis and Gyr, Inc., New York, N.Y., Sodeco Small Impulse Counters Type TCe, Bulletin No. 201 (1965). Recommended counter type for new installations: TCeZ6E, 6-digit manual reset, with 48-V.d.c., 1000-ohm coil.

4. H. S. Dakin, ERTS Patch Panel, Lawrence Radiation Laboratory drawing 5V7324: available from Technical Information Division, Lawrence Radiation Laboratory, Berkeley, California.

5. U. S. Department of Commerce, National Bureau of Standards, Handbook 63, Protection Against Neutron Radiation Up to 30 Million Electron Volts (1957), page 15.

6. H. S. Dakin, Radiation Detector/Preamplifier Assembly, Lawrence Radiation Laboratory Report UCID-2836 (Rev.) (1967). Same availability as Ref. 4.

7. H. S. Dakin, Inverting Pulse Amplifier, Lawrence Radiation Laboratory Report UCID-3064 (1967). Same availability as Ref. 4.

8. H. S. Dakin, ERTS Pulse Converter, Lawrence Radiation Laboratory drawing 5V7651; same availability as Ref. 4.

9. H. S. Dakin, Logarithmic Count-Rate Meter/Alarm System, Lawrence Radiation Laboratory Report UCRL-17281 (in preparation)

FIGURE CAPTIONS

Fig. 1. Map of the Berkeley site of the Lawrence Radiation Laboratory, showing location of Environmental Radiation Telemetry System (ERTS) transmitting and recording stations. One of the transmitting stations (arrow) is in downtown Berkeley, and is not shown on the map.

Fig. 2. Central recording station in the Health Physics Department Office, Bldg. 72. Two chart recorders are shown on top of the rack, which contains a 20-channel register panel, a 40-channel patch panel, and modular counting equipment of the type used in the transmitting stations.

Fig. 3. Operation of a typical transmitting station (top) and the central recording station (bottom) shown in block diagram form. Note that the two conductors of the telephone line carry two channels of information, with conduction through existing electrical grounds providing a return path for both channels. Of the 40 channels (20 lines) accommodated by the patch panel, the last 20 are used for special-purpose connections, including transmission of count-rate metering currents and fast pulses.

Fig. 4. Sample section of chart from event recorder.

Fig. 5. Schematic diagram of pulse converter which is used to change short low-level scaler output pulses into longer (40 msec) and higher-level (60 V) ones so that recording equipment directly from the telephone lines.

Fig. 6. A method for noise-free transmission of short pulses (5 μsec) over standard telephone line. Note that one-half of the telephone line is grounded at the transmitting end, but the line is isolated from ground at the receiving end by a pulse tranformer. Currents induced in the telephone line by external noise sources are cancelled because both halves of the line are affected in the same way.

Fig. 7. Noise-free transmission of metering currents over a telephone line. As in Fig. 6, one half of the telephone line is grounded at the

transmitting end, but isolated from ground at the receiving end. The variable resistor R1 is used to adjust the sensitivity of the meter movement M1, a 100-μA Simpson type 1227-C with a special logarithmic scale. Diodes CR1 and CR2 protect the meter movement from damage which might be caused by accidental excess voltage.

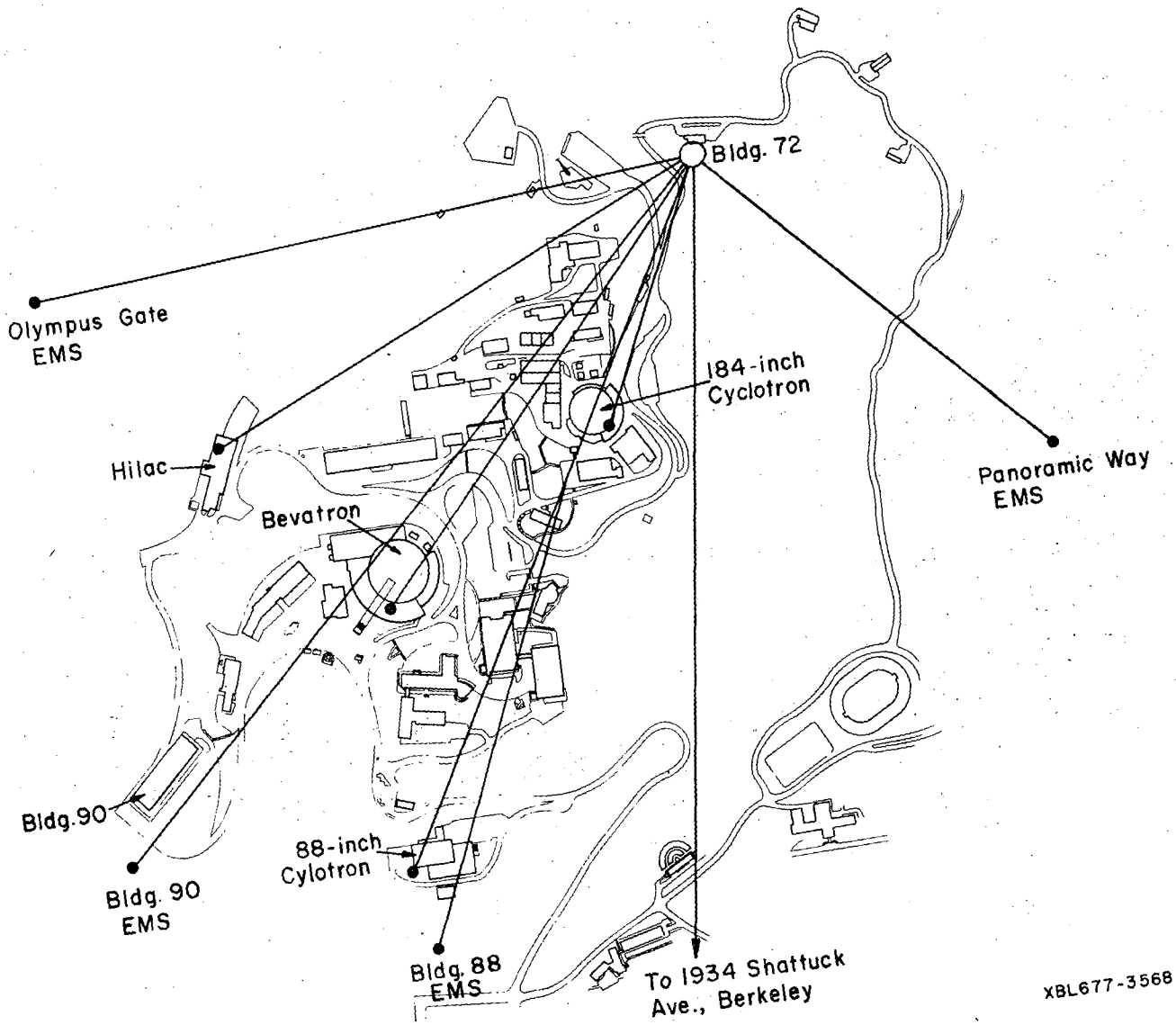
Bldg. 72
Olympus Gate
EMS
184-inch
Cyclotron
Hilac
Bevatron
Panoramic Way
EMS
Bldg.90
88-inch
Cylotron
Bldg. 90
EMS
Bldg. 88
EMS
To 1934 Shattuck
Ave., Berkeley
XBL677-3568

Fig. 1

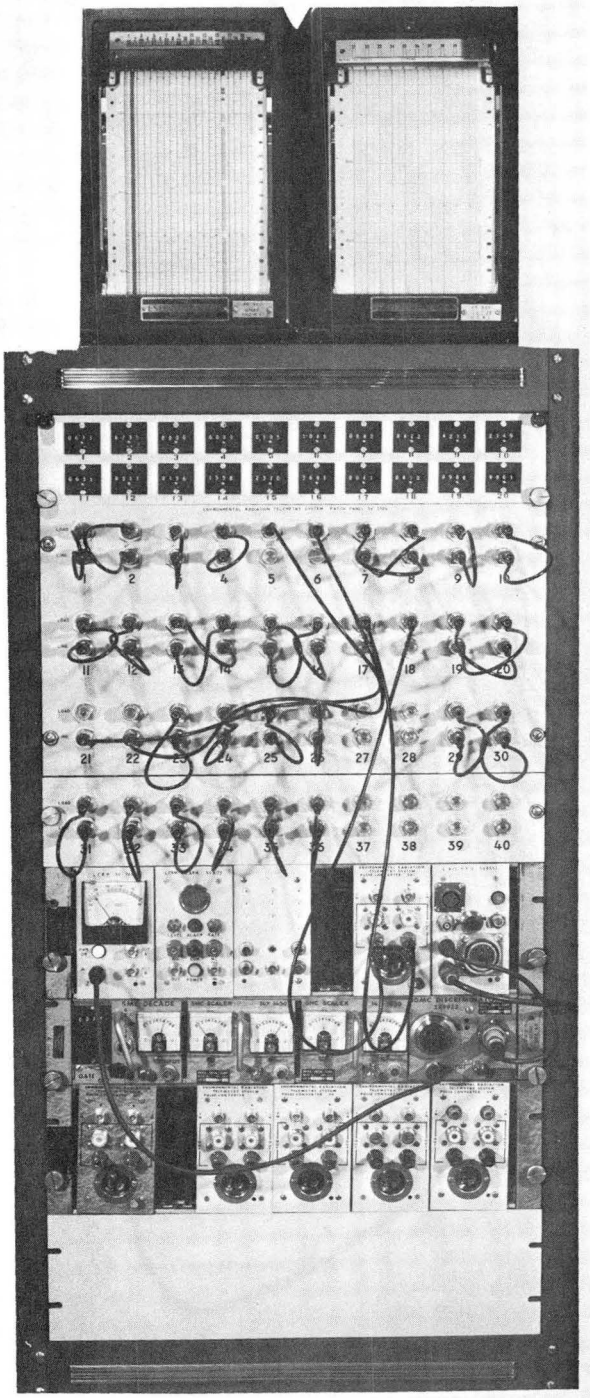

XBB 675-2957

Fig. 2

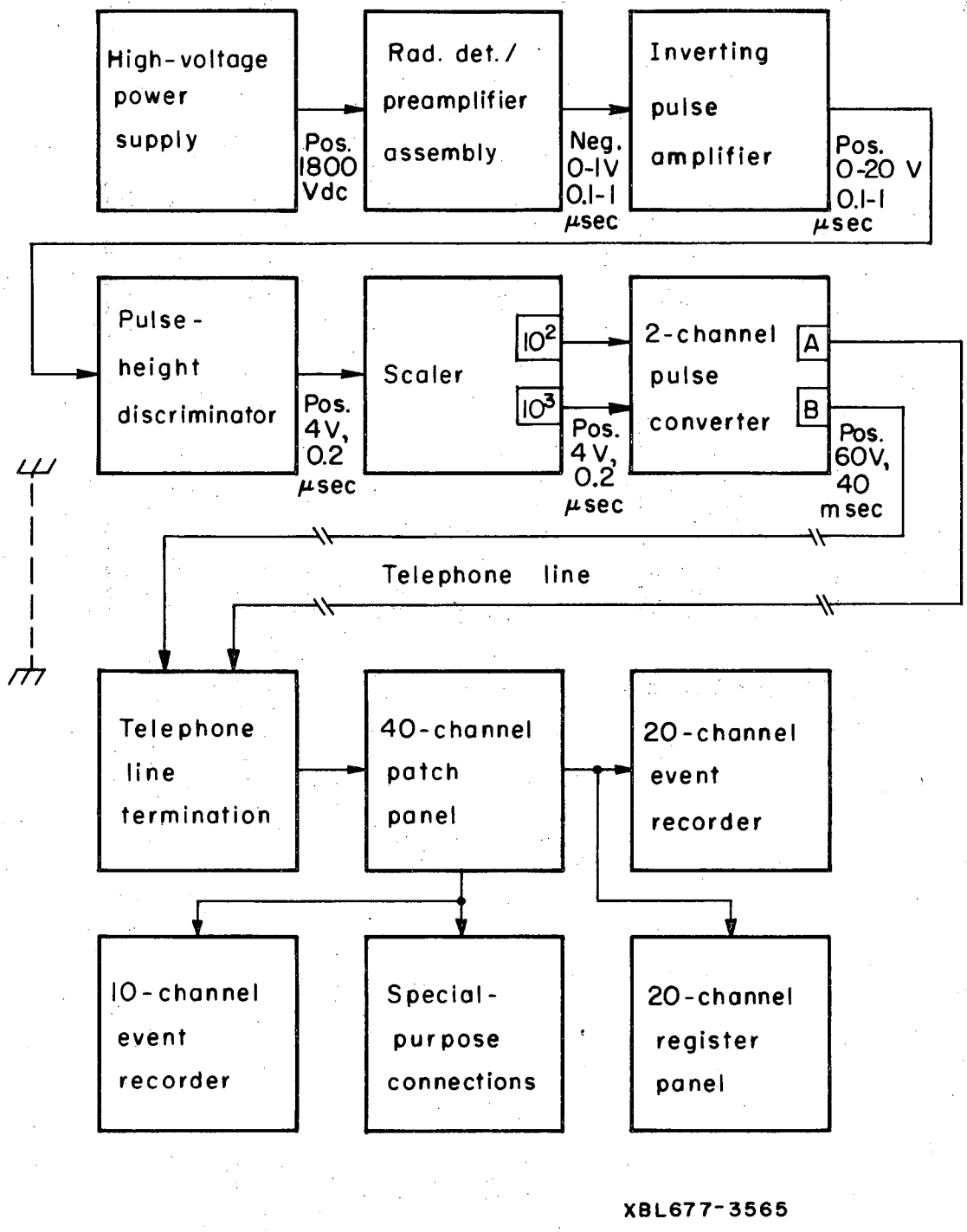
High-voltage power supply
Pos. 1800 Vdc
Rad. det./ preamplifier assembly
Neg. 0-1V 0.1-1 μsec
Inverting pulse amplifier
Pos. 0-20 V 0.1-1 μsec
Pulse-height discriminator
Pos. 4V, 0.2 μsec
Scaler
10²
10³
Pos. 4 V, 0.2 μsec
2-channel pulse converter
A
B
Pos. 60V, 40 msec
Telephone line
Telephone line termination
40-channel patch panel
20-channel event recorder
10-channel event recorder
Special-purpose connections
20-channel register panel
XBL677-3565

Fig. 3

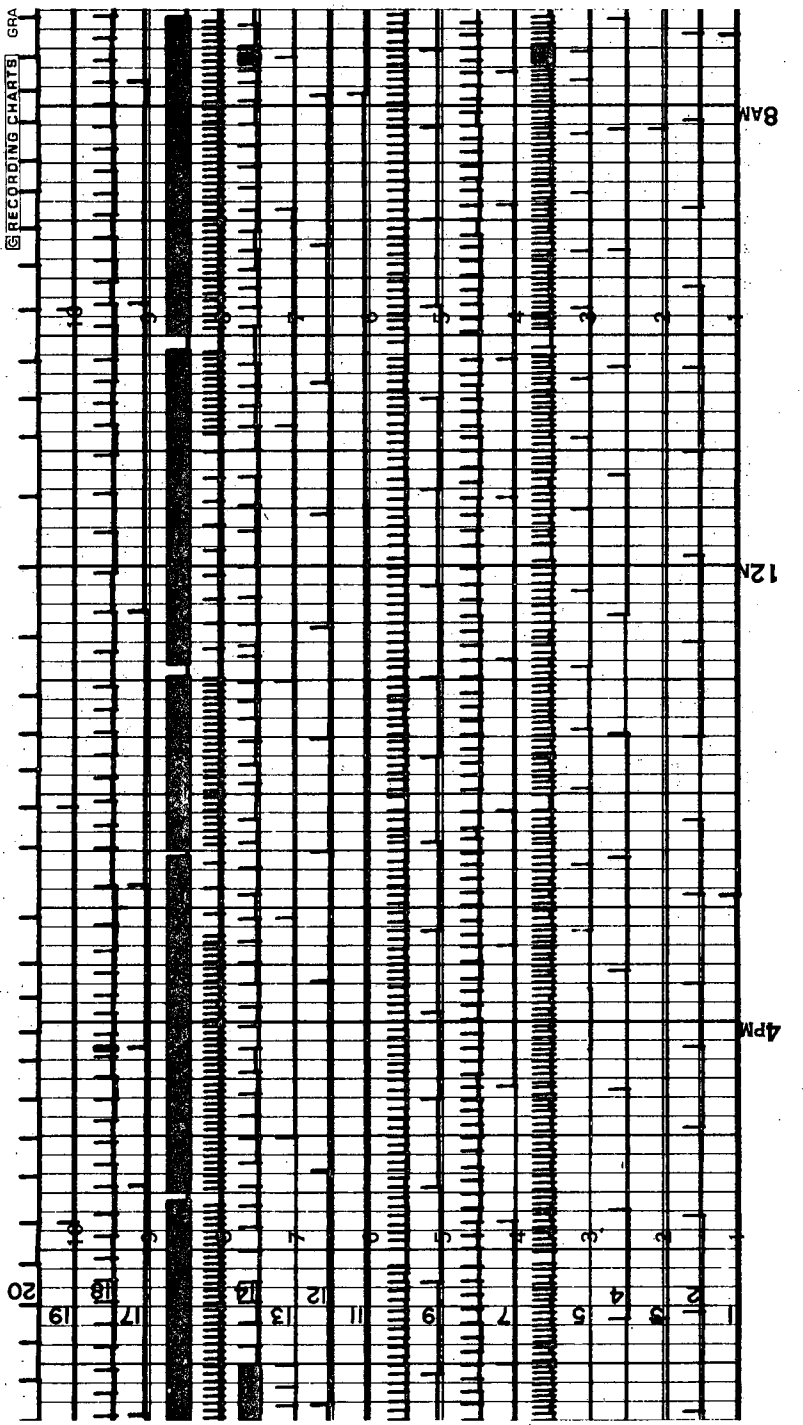

XBL 678-4626

Fig. 4

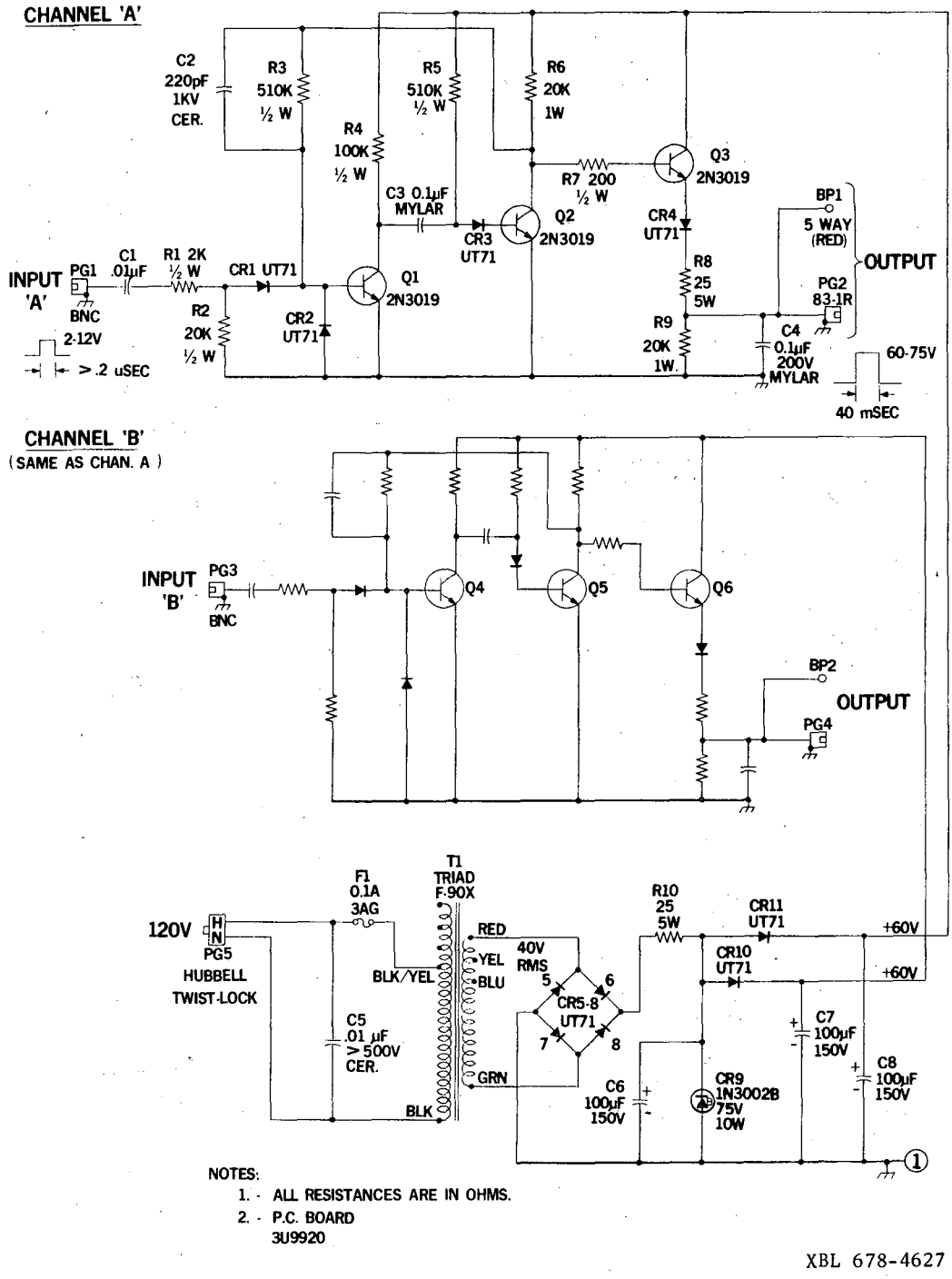

NOTES:
1. - ALL RESISTANCES ARE IN OHMS.
2. - P.C. BOARD 3U9920

XBL 678-4627

Fig. 5

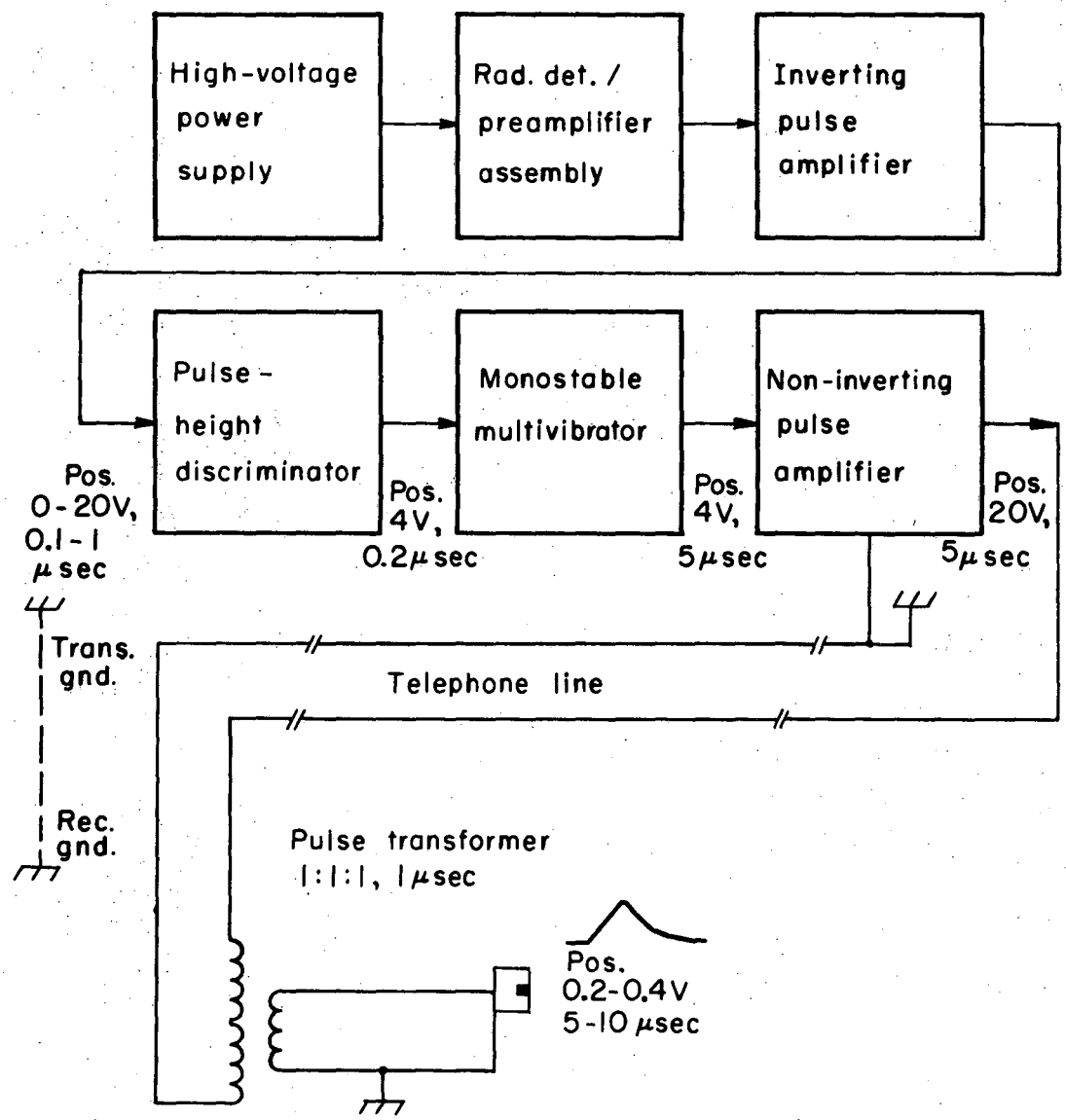

XBL677-3566

Fig. 6

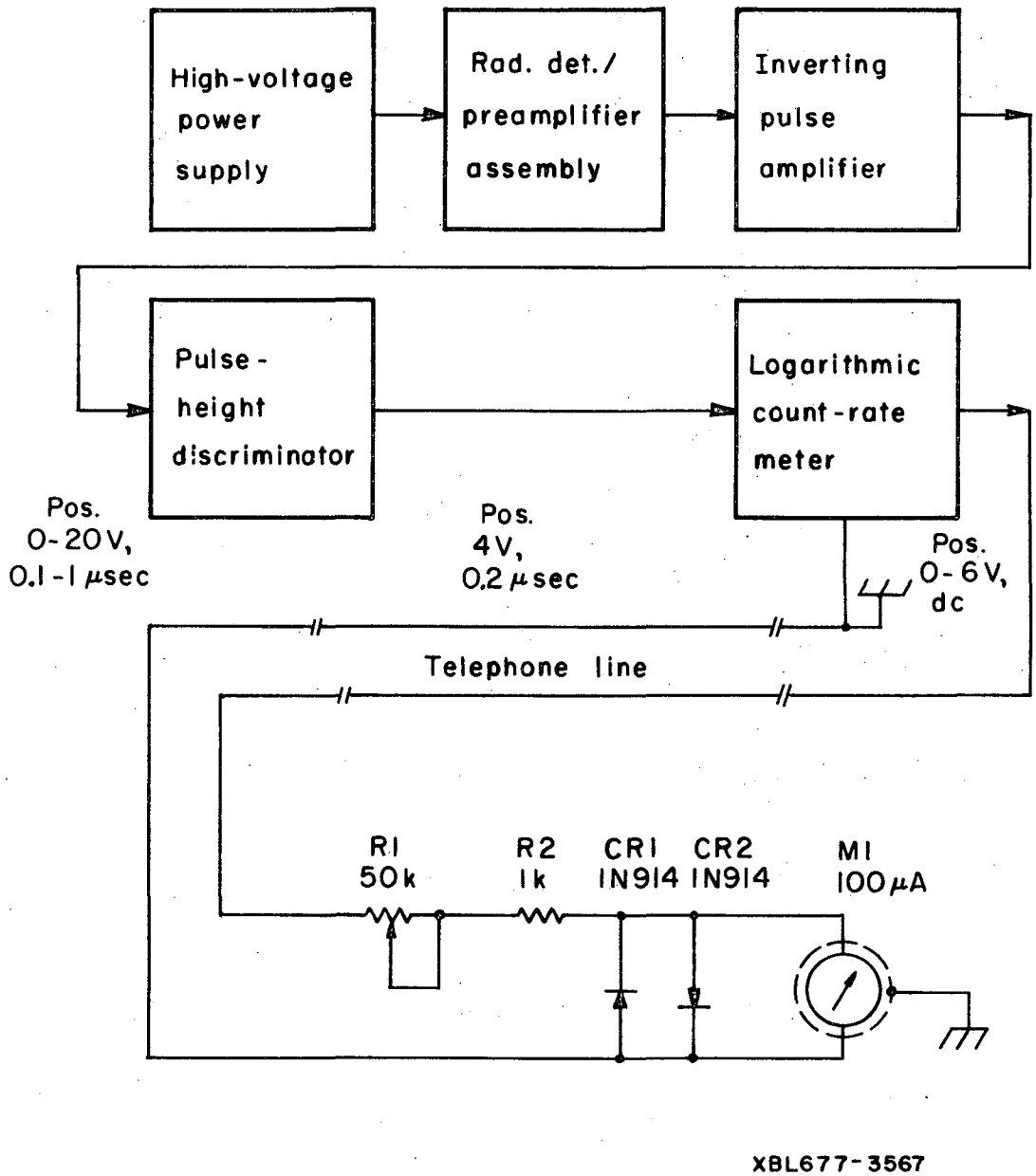
High-voltage power supply
Rad. det./ preamplifier assembly
Inverting pulse amplifier
Pulse-height discriminator
Logarithmic count-rate meter
Pos. 0-20V, 0.1-1 μsec
Pos. 4V, 0.2 μsec
Pos. 0-6V, dc
Telephone line
R1 50k
R2 1k
CR1 IN914
CR2 IN914
M1 100μA
XBL677-3567

Fig. 7

LEGAL NOTICE

This report was prepared as an account of Government sponsored work. Neither the United States, nor the Commission, nor any person acting on behalf of the Commission:

A. Makes any warranty or representation, expressed or implied, with respect to the accuracy, completeness, or usefulness of the information contained in this report, or that the use of any information, apparatus, method, or process disclosed in this report may not infringe privately owned rights; or

B. Assumes any liabilities with respect to the use of, or for damages resulting from the use of any information, apparatus, method, or process disclosed in this report.

As used in the above, "person acting on behalf of the Commission" includes any employee or contractor of the Commission, or employee of such contractor, to the extent that such employee or contractor of the Commission, or employee of such contractor prepares, disseminates, or provides access to, any information pursuant to his employment or contract with the Commission, or his employment with such contractor.

TECHNICAL INFORMATION DIVISION
LAWRENCE RADIATION LABORATORY
UNIVERSITY OF CALIFORNIA
BERKELEY, CALIFORNIA 94720