1657

UCRL-

UNCLASSIFIED

UNIVERSITY OF CALIFORNIA — BERKELEY

TWO-WEEK LOAN COPY

This is a Library Circulating Copy which may be borrowed for two weeks. For a personal retention copy, call Tech. Info. Division, Ext. 5545

RADIATION LABORATORY

DISCLAIMER

This document was prepared as an account of work sponsored by the United States Government. While this document is believed to contain correct information, neither the United States Government nor any agency thereof, nor the Regents of the University of California, nor any of their employees, makes any warranty, express or implied, or assumes any legal responsibility for the accuracy, completeness, or usefulness of any information, apparatus, product, or process disclosed, or represents that its use would not infringe privately owned rights. Reference herein to any specific commercial product, process, or service by its trade name, trademark, manufacturer, or otherwise, does not necessarily constitute or imply its endorsement, recommendation, or favoring by the United States Government or any agency thereof, or the Regents of the University of California. The views and opinions of authors expressed herein do not necessarily state or reflect those of the United States Government or any agency thereof or the Regents of the University of California.

UCRL-1657
Unclassified-Chemistry Distribution

UNCLASSIFIED

UNIVERSITY OF CALIFORNIA

Radiation Laboratory

Contract No. W-7405-eng-48

RADIATION CHEMISTRY OF AQUEOUS SOLUTIONS CONTAINING BOTH FERROUS ION AND CARBON DIOXIDE

Warren M. Garrison and G. K. Rollefson

January 28, 1952

Berkeley, California

RADIATION CHEMISTRY OF AQUEOUS SOLUTIONS CONTAINING BOTH FERROUS ION AND CARBON DIOXIDE *

Warren M. Garrison and G. K. Rollefson

Crocker Laboratory, Radiation Laboratory,
and Department of Chemistry,
University of California
Berkeley, California

January 28, 1952

Introduction

The study of the radiation chemistry of aqueous solutions containing two solutes offers two general possibilities. The first is that the solutes may react with all of the H and OH radicals produced by the action of the radiation on the water and thus eliminate any back-reaction. The yield obtained under such conditions would represent the maximum yield of the primary process. The second possibility is that one solute will take all of the OH or all of the H and thus serves as an internal standard for the amount of radiation introduced and permits the study of the reactions of the other radical with various substances. For a substance to serve as such an internal standard it is sufficient that the amount of this standard reacting should not depend on the concentration of the substance added. Another condition which must be fulfilled in studies of this type is that the oxidation-reduction couples present in the solution must not interact in any manner independent of the radiation. The results which we are presenting in this paper are for experiments of this second type. We have used ferrous ion as a means of removing all OH radicals formed in the solution and have studied the reactions of hydrogen atoms upon dissolved carbon dioxide which as recently observed[1] can be reduced to formic acid and formaldehyde by high energy radiation.

---

* The work described in this paper was sponsored by the United States Atomic Energy Commission.

Experimental

Solutions* containing one molar ferrous sulphate, one-tenth normal sulfuric acid, and carbon dioxide, were bombarded with 35-MEV helium ions in an all-glass target cell of the type shown in Figure 4. The beam (0.1 microampere in all cases) entered through a thin glass window (A). Solutions were de-aerated prior to the addition of carbon dioxide by evacuation through B. The C^{14} labelled carbon dioxide was added to the cell by either of two methods. In the first, $C^{14}O_2$, prepared[2] by the action of perchloric acid on $BaC^{14}O_3$, was added by means of a Toepler pump, through B which was then sealed off. In the second method, a known amount of $NaC^{14}O_3$ was placed in the side arm (C) prior to evacuation. In this case, the $C^{14}O_2$ was generated, after the target cell was sealed at D, by tilting the cell so that acid solution came in contact with the $Na_2C^{14}O_3$. Since only a few milligrams of $Na_2C^{14}O_3$ were required, no significant change in the acid concentration of the solution resulted. During bombardment, the target cell was supported horizontally and rotated in the target assembly shown in Figure 5. The irradiation period could be accurately determined by use of the shutter arrangement (5a,5b). The helium ion beam was delimited by the water-cooled aperture (2). The target cell (8) could be rotated in the assembly (7) which in turn was fastened to the shutter assembly at 6. After irradiation, the cells were attached at E through a glass seal to a vacuum system. The break-off (F) was opened and the gases were removed for mass spectrometric analysis and for $C^{14}O_2$ recovery by means of a Toepler pump. The cell was then cut from the line and flushed with carbon dioxide followed

---

* The ferrous sulphate used in these experiments was Baker and Adams Reagent Grade without further purification. Water, from a Barnstead still, redistilled in glass from alkaline permanganate was used in preparing the solution. The $C^{14}O_2$ as $BaC^{14}O_3$, was obtained from the United States Atomic Energy Commission, Oak Ridge, Tennessee.

by nitrogen to remove traces of $C^{14}O_2$ activity. An aliquot of this solution was titrated[3] with standardized titanous chloride solution to determine the amount of ferric ion produced. The remainder of the solution was then distilled *in vacuo*.

The amounts of $HC^{14}OOH$, $HC^{14}HO$, $C^{14}H_3OH$, and $(C^{14}OOH)_2$ produced in the irradiation were determined by procedures based on the addition of milligram amounts of stable carrier for each of the irradiation products. These were separated as indicated below, using modifications of previously described[1] techniques. To the distillate were added formic acid, formaldehyde, and methyl alcohol carriers in amounts to give 100 milligrams of the isolated product, i.e., barium formate, methone derivative of formaldehyde, and barium carbonate prepared from carbon dioxide formed on oxidation of the methyl alcohol fraction. After addition of carrier, the distillate was again flushed with carbon dioxide, adjusted to pH 7 with sodium hydroxide, and redistilled *in vacuo*. The formaldehyde and methyl alcohol were obtained in the distillate. The residue which contained the formic acid fraction was acidified to pH 1 and redistilled. The formic acid distillate (~ 5 cm^3) was flushed with carbon dioxide, neutralized to pH 8 with barium hydroxide, centrifuged to remove barium carbonate, and was then added to 75 cm^3 of warm absolute ethyl alcohol which precipitated crystalline barium formate. The barium formate was dissolved in a minimum volume of water and recrystallized by the addition of ethyl alcohol. This process was repeated three times following which the barium formate was mounted on an aluminum plate to a uniform thickness and assayed for C^{14} activity using standard techniques.[2]

The fraction containing the formaldehyde and methyl alcohol was mixed with methone solution in 50 per cent excess and acidified to pH 1. The methone-formaldehyde derivative which precipitates under these conditions was separated from the methyl alcohol by distillation *in vacuo*. The methyl alcohol fraction

from one of the bombardments (Number 2-2) was wet oxidized with chromium trioxide-sulfuric acid mixture containing potassium iodate, and the evolved carbon dioxide after precipitation as barium carbonate was found to be inactive. This observation agrees with the findings previously reported.[1] The methone-formaldehyde precipitate was filtered off, washed, redissolved in sodium hydroxide solution, and reprecipitated by the addition of acid. This cycle was repeated three times. The methone derivative was then recrystallized twice from acetone-water and assayed for C^{14} activity.

The first residue containing the ferrous sulphate and $(C^{14}OOH)_2$ was dissolved in 75 cc of water and to this solution was added oxalic acid in an amount equivalent to 100 milligrams of lanthanum oxalate. Sodium hydroxide was added to precipitate ferrous hydroxide and to bring the solution to pH 10. After centrifugation, the supernatant, which contained part of the added oxalate carrier, was treated with excess lanthanum nitrate. The lanthanum oxalate was filtered off, redissolved in 6 N sulfuric acid and reprecipitated by diluting the solution to 0.05 N and heating. After three recrystallizations, the lanthanum oxalate was assayed for C^{14} activity as described above. In all cases the C^{14} activity in the oxalate fraction was only slightly above the counting background.

Discussion

It is apparent from inspection of the results presented in Table 1 that the principal products formed in this system are ferric ion and hydrogen, in a proportion very close to two mols of ferric ion to one mol of hydrogen. This is brought out particularly well by the plot shown in Figure 1. It is to be noted that these results are not in agreement with Nurnberger[4] who worked with alpha particles of considerably lower energy and found a rather wide range of values for this ratio. It is also shown in Table I that a small fraction of

the hydrogen atoms is used to form reduction products from carbon dioxide. The most important of these is formic acid, but there are also much smaller amounts of formaldehyde and oxalate produced. Since most of the hydrogen atoms combine to form molecular hydrogen, the effective concentration of these atoms in the solution is determined by the rate of formation from the water and the rate of the combination to form the molecules. In this connection we wish to call attention to the distinction between what might be called the local concentration of atoms along the particle path and an over-all concentration in the solution. This has been discussed by Magee.[5] The local concentration of hydrogen atoms will be essentially constant for a given radiation.

The results indicate that the amount of formate formed from the carbon dioxide is proportional to the amount of dissolved carbon dioxide. Therefore, in comparing the results of different experiments we have used the ratio of the concentration of formic acid to that of carbon dioxide. Figure 2 shows a plot of this quantity against the concentration of ferric ion produced. This is essentially a plot of the ratio against time, since the amount of ferric ion produced under constant radiation conditions is a linear function of time. It is apparent that the formate rises and approaches a quite definite limit asymptotically. The amounts of formaldehyde and oxalate formed are always quite small, compared to the formate (less than 5 per cent). This approach of the formate concentration to a definite limit must be caused by the existence of compensating reactions, one forming the substance, the other destroying it, so that in the limit the rates of the two processes are equal.

The following set of reactions is suggested as a mechanism to account for the formation and destruction of formic acid by means of hydrogen atoms:

1. $H_2O \rightsquigarrow = H + OH$

2. $H_2CO_3 + H = HCO_2 + H_2O$

3. $HCOOH + H = H_2 + HCO_2$

4. $HCO_2 + H = HCOOH$

5. $HCO_2 + H = H_2 + CO_2$

6. $Fe^{++} + OH = Fe^{+++} + OH^-$

7. $H + H = H_2$

Reaction 1 shows the dissociation of water into hydrogen atoms and hydroxyl radicals. Reaction 6 indicates the removal of hydroxyl radicals by ferrous ion. It is immaterial for our discussion whether ferrous ion reacts with hydroxyl directly or with hydrogen peroxide, formed by the combination of two hydroxyls, as long as neither hydroxyl or hydrogen peroxide react in any other way in the system. Reaction 7 shows the combination of the hydrogen atoms. We are assuming the Reactions 1 and 7 together determine what might be called a steady state concentration of hydrogen in the system. Reactions 2, 3, 4, and 5 show the formation and decomposition of the formate. It is assumed that these reactions occur to such a small extent that they have a negligible effect on the steady rate concentration of hydrogen atoms. It is probable that all of these reactions occur without any significant activation energy. If that is true, in order to reach a steady concentration of formic acid as low as that observed, the reactive species of dissolved carbon dioxide in the solution must be one present in the concentration comparable to that of formic acid at the steady state. It is for this reason that we have assumed the reactive species in Reaction 2 to be carbonic acid. Also, carbon dioxide and hydrogen atoms do not react readily in the gas phase. If we apply the usual procedures for deriving a rate law from a mechanism, we obtain the following equation:

$$\frac{d(HCOOH)}{dt} = \frac{k_4 k_2 (H_2CO_3)(H)}{(k_4 + k_5)} + \left(\frac{k_3 k_4 (H)}{k_4 + k_5} - k\ (H)\right)(HCOOH)$$

On the basis of the assumptions already stated, we may replace d(HCOOH)/dt by $d(HCOOH)/d(Fe^{+++})$, and if we also consider that in our experiments the carbonic acid and hydrogen atom concentrations remain essentially constant, the equation can be shown in the form of:

$$\frac{d\left[(HCOOH)/(H_2CO_3)\right]}{d(Fe^{+++})} = a - b(HCOOH)/(H_2CO_3)$$

Integration of this differential equation shows that a plot of the logarithm of a constant minus the ratio of the concentration of formic acid to that of carbon dioxide against the ferric ion concentration should be a straight line. Such a plot is shown in Figure 3. It is apparent that the data fit this plot over the entire range of observations.

If we assume that all of these reactions proceed without activation energy, it is possible to draw some conclusions concerning the effective concentration of hydrogen atoms in the solution. The reaction of a hydrogen atom with another hydrogen atom to form a molecule, proceeds approximately one hundred times as fast as the reaction with either carbonic acid or formic acid. Since the latter two substances were present in concentrations of about 10^{-5} M, this means that in our experiments the effective concentration of hydrogen atoms was about 10^{-3} M. Our mechanism suggests a possible means of accounting for the formation of oxalate* by having two HCO_2 radicals come together in the solution. Since these radicals were present in rather low concentration, it is not surprising that the amount of oxalate formed was not large. Formaldehyde is probably produced by some reduction of the formic acid by hydrogen atoms. The amount formed in our experiments is too small to warrant any attempt to set up a detailed mechanism.

---

* Experimental results, recently obtained by Garrison, Morrison, and Hamilton, soon to be published, indicate that oxalate is one of the principal products in the irradiation of hydrogen saturated solutions of formic acid with 35-MEV helium ions.

We hope to study the possible reduction of formate in detail in later experiments.

Summary

The radiation chemistry of acid ferrous sulphate solutions containing dissolved carbon dioxide has been studied using high energy helium ions from the cyclotron as the radiation source. The principal products formed are ferric ion and hydrogen in a proportion very close to two mols of ferric ion to one mol of hydrogen. A small fraction of the hydrogen is used to form reduction products of carbon dioxide. The most important of these is formic acid, but there are also much smaller amounts of formaldehyde and oxalate produced. The formate concentration approaches a definite limit asymptotically and is proportional to the concentration of dissolved carbon dioxide. A proposed mechanism gives the rate law

$$\frac{d\left[(HCOOH)/(H_2CO_3)\right]}{d(Fe^{+++})} = a - b(HCOOH)/(H_2CO_3)$$

which fits the observed data over the entire range of observation.

Acknowledgments:

We wish to thank Professor Joseph G. Hamilton, Director of Crocker Laboratory, for his interest in this problem and for many helpful discussions, Doctor Amos Newton for the mass spectrometric data, Mr. D. C. Morrison and Mr. Boyd Weeks for help in some of the experimental procedures, Mr. Herman R. Haymond for several suggestions during the course of the investigation, and the staff of the 60-inch Cyclotron at Crocker Laboratory for bombardments and assistance in target design.

References

1. Garrison, Morrison, Hamilton, Benson, and Calvin: Science, 1951, 114, 416.

2. Calvin, Heidelberger, Reid, Tolbert, and Yankowich: Isotopic Carbon, John Wiley and Sons, New York, 1949.

3. Treadwell and Hall: Analytical Chemistry, Vol. II, John Wiley and Sons, New York, 1942.

4. Nurnberger: J. Physic. Chem., 1934, 38, 47.

5. Magee: J. Amer. Chem. Soc., 1951, 73, 3270.

6. Taylor and Marshall: J. Physic. Chem., 1925, 29, 1140.

TABLE 1

Bombardment Number	3-2	2-2	2-3	4-2	5-1	4-3	8-1	6-2
Vol. of solution (cm^3)	20.0	13.2	13.2	21.0	22.8	21.0	26.0	29.0
Gas space (cm^3)	7.20	6.85	7.00	7.05	7.08	6.30	6.40	8.05
$C^{14}O_2$ added (mc)	1.00	1.00	1.00	1.00	1.00	1.00	0.10	none
C^{14} in CO_2 (%)	8.14	7.39	8.14	8.14	7.39	7.39	8.14	—
H_2 molecules ($\times 10^{-19}$)	0.16	4.06	3.73	8.35	16.0	28.6	10.2	23.0
Fe^{+3} ions ($\times 10^{-19}$)	2.61	4.10	6.87	16.4	29.1	58.9	21.8	43.4
Fe^{+3} ions/ H_2 molecules	16.2	1.01	1.84	1.97	1.82	2.06	2.10	1.90
$(Fe^{+3}) \times 10^3$	2.18	5.18	8.54	13.1	21.2	46.8	14.0	24.9
$(CO_2) \times 10^3$	5.57	7.46	7.35	5.47	4.94	5.15	.48	—
$(HCOOH) \times 10^6$	5.25	31.1	42.2	39.3	37.4	40.7	3.5	—
$(HCHO) \times 10^8$	1.95	7.20	9.85	4.76	5.24	5.34	—	—
$[(HCOOH)/(CO_2)] \times 10^3$	0.94	4.17	5.74	7.20	7.57	7.92	.73	—
$[(HCHO)/(CO_2)] \times 10^5$	0.35	.97	1.34	.87	1.06	1.02	—	—

Titles for Figures

Fig. 1. Relative yields of ferric ion and hydrogen.

Fig. 2. Dependence of $(HCOOH)/(CO_2)$ ratio on ferric ion concentration.

Fig. 3. $\text{Log}\left[a - \frac{(HCOOH)}{(CO_2)}\right]$ as a function of ferric ion concentration.

Fig. 4. Design of target cell.

Fig. 5. Target assembly.

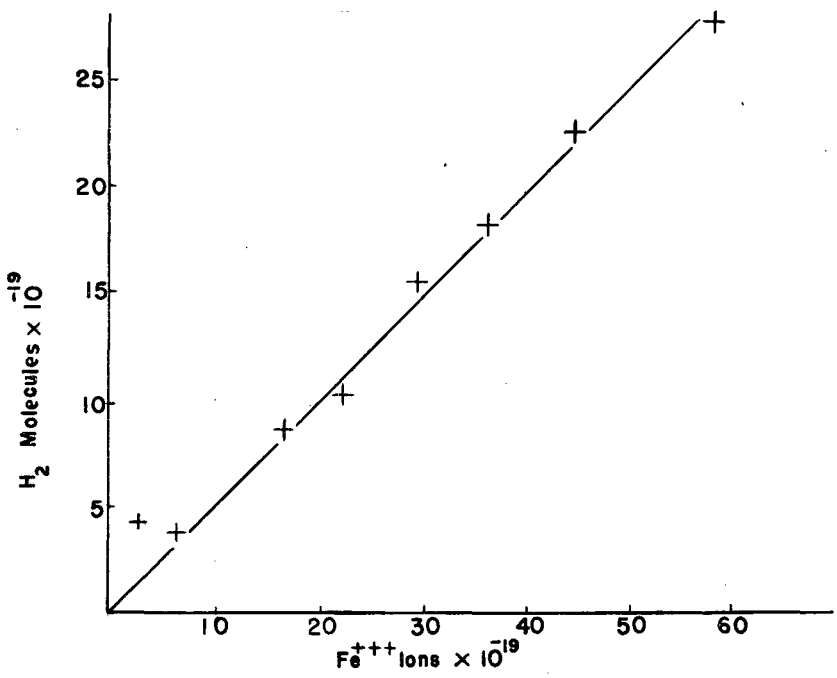
25
20
15
10
5
H_2 Molecules × 10^{-19}
10
20
30
40
50
60
Fe^{+++} Ions × 10^{-19}

Fig. 1

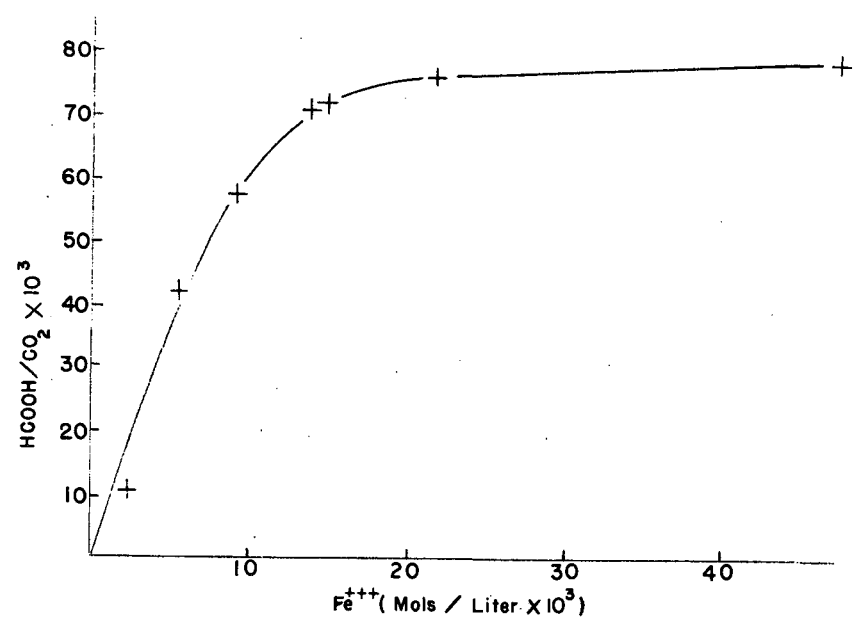
80
70
60
50
40
30
20
10
$HCOOH/CO_2$ × 10^3
10
20
30
40
Fe^{+++} (Mols / Liter × 10^3)

Fig. 2

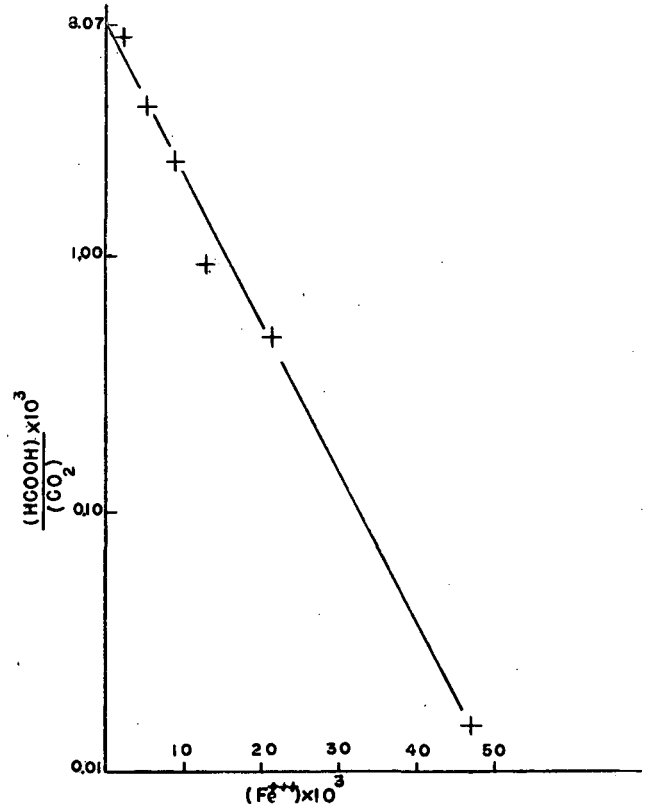
3.07
1.00
0.10
0.01
10
20
30
40
50
$\frac{(HCOOH)}{(CO_2)} \times 10^3$
$(Fe^{++}) \times 10^3$

Fig. 3

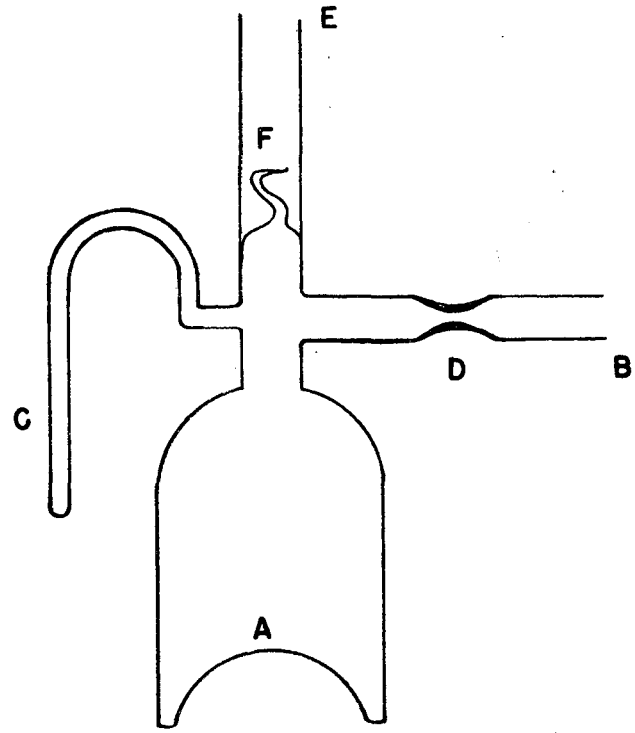
E
F
D
B
C
A

Fig. 4

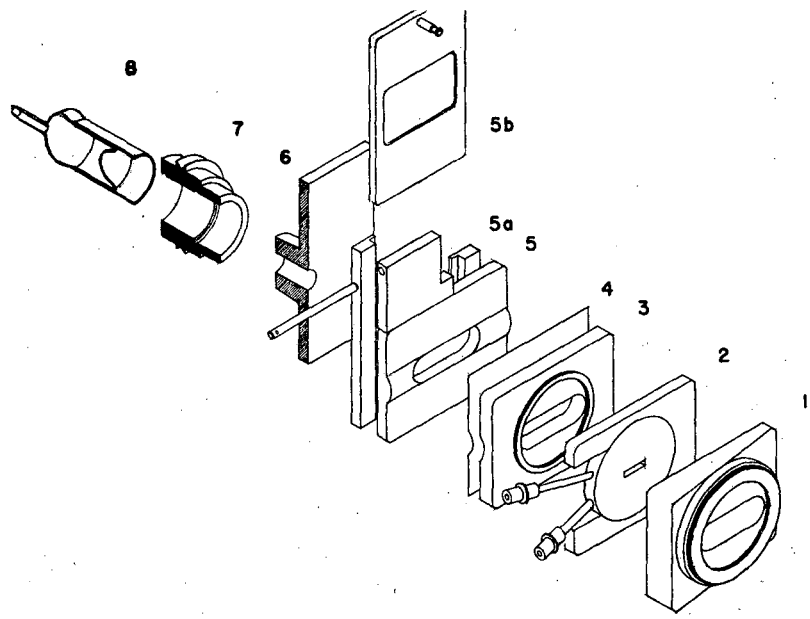

Fig. 5