UCRL-16632 Rev 1

University of California

Ernest O. Lawrence Radiation Laboratory

TWO-WEEK LOAN COPY

This is a Library Circulating Copy which may be borrowed for two weeks. For a personal retention copy, call Tech. Info. Division, Ext. 5545

"DO-IT-YOURSELF" LOCK-IN AMPLIFIERS, RADIO AND AUDIO FREQUENCY

Berkeley, California

DISCLAIMER

This document was prepared as an account of work sponsored by the United States Government. While this document is believed to contain correct information, neither the United States Government nor any agency thereof, nor the Regents of the University of California, nor any of their employees, makes any warranty, express or implied, or assumes any legal responsibility for the accuracy, completeness, or usefulness of any information, apparatus, product, or process disclosed, or represents that its use would not infringe privately owned rights. Reference herein to any specific commercial product, process, or service by its trade name, trademark, manufacturer, or otherwise, does not necessarily constitute or imply its endorsement, recommendation, or favoring by the United States Government or any agency thereof, or the Regents of the University of California. The views and opinions of authors expressed herein do not necessarily state or reflect those of the United States Government or any agency thereof or the Regents of the University of California.

Submitted to
The Review of Scientific Instruments

UCRL-16632 Rev 1

UNIVERSITY OF CALIFORNIA

Lawrence Radiation Laboratory
Berkeley, California

AEC Contract No. W-7405-eng-48

"DO-IT-YOURSELF" LOCK-IN AMPLIFIERS, RADIO AND AUDIO FREQUENCY

Kenneth W. Lamers

May 13, 1966

"DO-IT-YOURSELF" LOCK-IN AMPLIFIERS, RADIO AND AUDIO FREQUENCY*

Kenneth W. Lamers

Lawrence Radiation Laboratory
University of California
Berkeley, California

May 13, 1966

ABSTRACT

We describe two specific lock-in amplifiers, one designed for radio frequency, the other for audio. Both have been built and tested by chemists with limited electronics backgrounds.

The audio-frequency lock-in amplifier was designed for an ESR spectrometer, locking a klystron's frequency to that of a resonant cavity. It is designed around commercial circuit modules, so that much of its circuitry need not be fabricated. The frequency range is 40 to 20 000 Hz, but this is easily extended. A preamplifier for extending sensitivity to microvolt levels is also reported.

The radio-frequency lock-in amplifier was designed for measuring differential pressures on the order of 0.1 μ with an accuracy of several percent. In achieving the design objective, we found that we were able to detect capacitance changes on the order of 10^{-18} F. The rf unit operates at 2.7 MHz but can be adapted to other radio frequencies. It uses Nuvistor tubes to minimize the instability problems normally encountered at radio frequencies.

I. INTRODUCTION

Although these lock-ins[1] were originally developed for specific applications, subsequent experience has indicated that they offer promise in other applications. With this in mind we have reported the units in detail.[2] Proper testing requires an oscilloscope and a signal generator, but our chemists have had little trouble in adapting to these instruments.

High-performance lock-in units are commercially available, but in many cases the price is prohibitive for experimenters with limited funds. Furthermore, some of these units incorporate features unnecessary to a given application, and the additional complexity is undesirable. It is also interesting that commercial lock-ins do not yet encompass the entire radio-frequency spectrum. In some cases, one has no alternative but to design his own. In any event, the experience gained in building and trouble-shooting one's own lock-in is invaluable in understanding the instrumentation requirements generally associated with it.

Concerning the audio-frequency lock-in (af unit), its principal merit is simplicity. This simplicity stems from its construction; i.e., it is designed around commercial circuit modules, so that much of its circuitry need not be fabricated. The unit is solid state and includes its own power supply; the components cost approximately $200. (A small preamplifier for extending sensitivity to microvolt levels is described in Ref. 2.) Lock-in performance compares favorably with specifications published for some commercial units but ours is less flexible in selecting frequency. It is best used in applications where frequency changes are seldom made but it can be adapted to variable-frequency operation. Fixed-frequency operation is quite suitable for many applications, however,

and reduces complexity of the instrument. Some experimenters will probably choose to establish frequency and sensitivity requirements with a commercial lock-in unit before building their own.

The radio-frequency lock-in amplifier (rf unit) does not employ circuit modules but uses Nuvistor tubes instead. Nuvistors, which are much smaller than conventional tubes, offer advantages at radio frequencies, as discussed later. In some ways the rf unit is easier to build than the af unit. Component cost for the rf unit is approximately $100.

II. GENERAL CONSIDERATIONS

Lock-in amplifiers are discussed elsewhere,[3] so this discussion will be somewhat limited. Basically, a lock-in amplifier does much the same thing as a tuned amplifier but does it better. The principal difference is that lock-in amplifiers are phase sensitive. Also, they can operate at bandwidths that are very much narrower than are possible with a conventional tuned amplifier operating at the same frequency. The reasons that lock-in amplifiers can operate at such narrow bandwidths are: (a) the information ("signal") sought is amplitude-modulated by a reference, usually of audio frequency or higher; (b) the reference also gates a synchronous detector that responds to the gating frequency only; and (c) if the reference frequency changes, the gating changes in correspondence, so that the lock-in always remains "in tune."

Lock-in techniques are commonly used to recover signals 40 dB below the ambient noise level. These techniques are very effective because: (a) they minimize noise generated by the amplifying devices used;[4] (b) they reduce white noise[5] associated with the signal inversely

as the square root of bandwidth (the degree to which bandwidth can be reduced is related to the highest frequency of the information sought); and (c) they discriminate against noise at the "tuned" frequency, but of random phase.

Lock-in techniques minimize noise generated by the amplifying devices used because: (a) the signal is modulated to translate its spectra from a band centered around zero frequency to a band centered about a higher frequency (the modulation frequency);[6] (b) most amplifying devices have noise spectra that vary as the reciprocal of frequency;[3] and (c) translation to a higher frequency moves the signal to a frequency where less noise is introduced by the amplifying devices used. In general the modulating frequency should be greater than 100 Hz when vacuum-tube amplifiers are used and greater than 1000 Hz when transistor amplifiers are used.

III. AUDIO-FREQUENCY LOCK-IN AMPLIFIER

A. Description

Principal components of our lock-in amplifier are shown in the block diagram of Fig. 1. The modulator, which is external to the af unit, takes many forms and can be electrical or mechanical.

The af unit (schematic in Fig. 2) uses three linear-amplifier modules. One amplifier in conjunction with a network comprises the oscillator. Another type of module includes three emitter-followers in one package. Most frequency-determining elements (a parallel-T for the first amplifier stage and a network for the oscillator) are fabricated into blank containers supplied by the module manufacturer.

B. Applications

The af unit was designed for an ESR spectrometer now under development. Two lock-in amplifiers are used, one for automatic frequency control, another for the signal channel.

We have adapted the af unit to NMR work, using the lock-in amplifier with a marginal oscillator to detect the nuclear magnetic resonant frequency of a sample exposed to a magnetic field. This frequency, directly proportional to field strength, can be measured with precision and affords an accurate measurement of field intensity. A future application involves automatic frequency tracking when the magnetic field is varied.

IV. RADIO-FREQUENCY LOCK-IN AMPLIFIER

A. General

Commercial lock-in amplifiers do not yet encompass the entire radio-frequency spectrum. This is probably because there is little demand and frequency flexibility is hard to come by. As requirements become better defined, commercial units can be expected to follow suit.

As stated earlier, the rf unit was designed with a specific objective in mind: to measure pressure differentials on the order of 0.1 μ accurate to several percent. At that time, commercial micromanometers of sufficient sensitivity were not available so we designed our own. For reasons described elsewhere,[7,8] we elected to sense pressure difference with a membrane manometer, constructed like a differential capacitor. The capacitor formed two legs of a resonant-bridge network excited by a 2.7 MHz source. Bridge output was amplified and detected with the rf unit described (Fig. 3).

The frequency of 2.7 MHz was chosen for several reasons, some theoretical and some practical. Those reasons, not discussed here, are explained in Ref. 7. At any rate, we ended up with an rf unit that performs well and is easy to duplicate.

Some readers may wonder why the rf unit also was not designed around circuit modules. The main reason was that the rf unit was developed before the af unit, so we had not yet thought of using circuit modules. Even so, we might have rejected the modular concept for the rf unit because: (a) most modules with adequate frequency response are subject to oscillation, so we might not have been able to realize as much gain; (b) the signal amplifier should be tuned, so there is no particular advantage to wide-band devices -- the gain-bandwidth product is wasted; (c) high-frequency modules are more expensive; if modules were used, the rf unit would have cost about three times as much as it did with Nuvistors; and (d) Nuvistors operate at higher voltages, so the output levels are higher and the need for a dc amplifier is eliminated in some cases.

The rf unit uses Nuvistor tubes because: (a) it was to be duplicated and operated by those with little or no electronic background (transistors were not used because their "loose" tolerances pose duplication problems; good design can compensate for this but engineering funds were limited); (b) Nuvistors are very small and generate little heat, which permitted us to confine them to well-shielded compartments, thus minimizing instability problems; and (c) their combination of high transconductance with low interelectrode capacitance permits considerable gain without neutralization of the amplifier stages.

B. Applications

The original application was for a micromanometer, as discussed in Ref. 8. In achieving the design objective we found that we were able to detect capacitance changes on the order of 10^{-18} F. This unusual sensitivity to dielectric properties could be useful in other areas; we are considering its application to diagnostic studies of gaseous media. Another application involved the detection of light modulated at 2.7 MHz.

ACKNOWLEDGMENTS

The af unit was designed for an ESR spectrometer now being developed at this Laboratory under the direction of Professor H. S. Johnston, Inorganic Materials Research Division.

The rf unit was designed under the direction of Professor D. N. Hanson, Department of Chemical Engineering. This unit was developed in collaboration with Dr. Peter Rony, now affiliated with the Monsanto Chemical Company, St. Louis, Missouri.

FOOTNOTES AND REFERENCES

*Work done under the auspices of the U. S. Atomic Energy Commission.

1. R. D. Moore, Lock-in Amplifiers for Signals Buried in Noise, Electronics, June 8, 1962.
2. Kenneth W. Lamers, "Do-It-Yourself" Lock-in Amplifiers, Radio and Audio Frequency, Lawrence Radiation Laboratory Report UCRL-16632, January 1966. A comprehensive report including design philosophy, detailed schematics, photographs, templates, construction details, specifications, and test procedures.
3. R. D. Moore and O. C. Chaykowsky, Modern Signal Processing Technique for Optimal Signal to Noise Ratios, Princeton Applied Research, Technical Bulletin 109 (1963).
4. Lock-in amplifiers are commonly driven by other devices that generate noise, a receiver for example. The lock-in technique minimizes noise generated by devices preceding it, provided that those noises are not modulated by the reference.
5. Noise per unit bandwidth is the same at all frequencies.
6. Harold S. Black, Modulation Theory (D. Van Nostrand Company, Inc., New York, 1953), p. 39.
7. Kenneth W. Lamers, The Design, Construction, and Operation of a Differential Micromanometer. Part I. Electronics, Lawrence Radiation Laboratory Report UCRL-11218, October 1964.
8. Peter R. Rony, The Design, Construction, and Operation of a Differential Micromanometer. Part II. Theory and Operational Characteristics, Lawrence Radiation Laboratory Report UCRL-11218, April 1965.

FIGURE CAPTIONS

Fig. 1. Block diagram of the af unit. The modulator, which is external to the af unit, takes many forms, electrical or mechanical.

Fig. 2. Schematic diagram of the af unit. Components indicated by * are frequency sensitive; their values can be deduced from Ref. 2. Components indicated by ** may require special attention. The preamplifier is not shown.

Fig. 3. Schematic diagram of the rf lock-in detector unit. The oscillator and power supply are not shown.

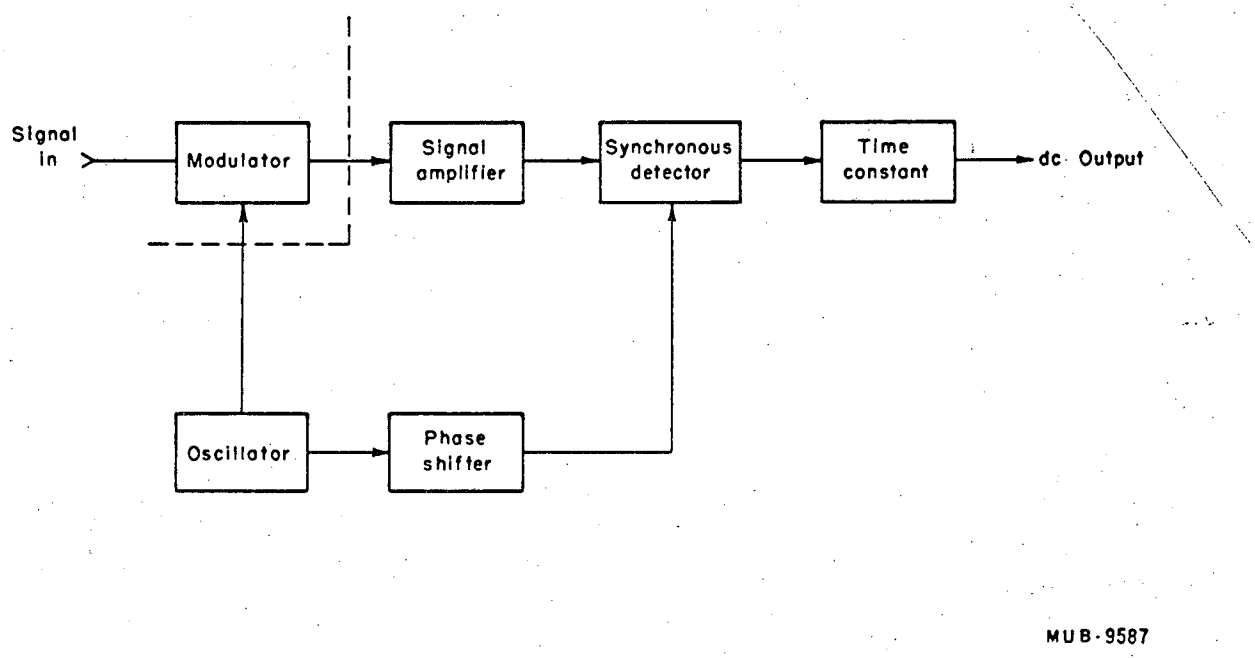
Signal in
Modulator
Signal amplifier
Synchronous detector
Time constant
dc Output
Oscillator
Phase shifter
MUB-9587

Fig. 1

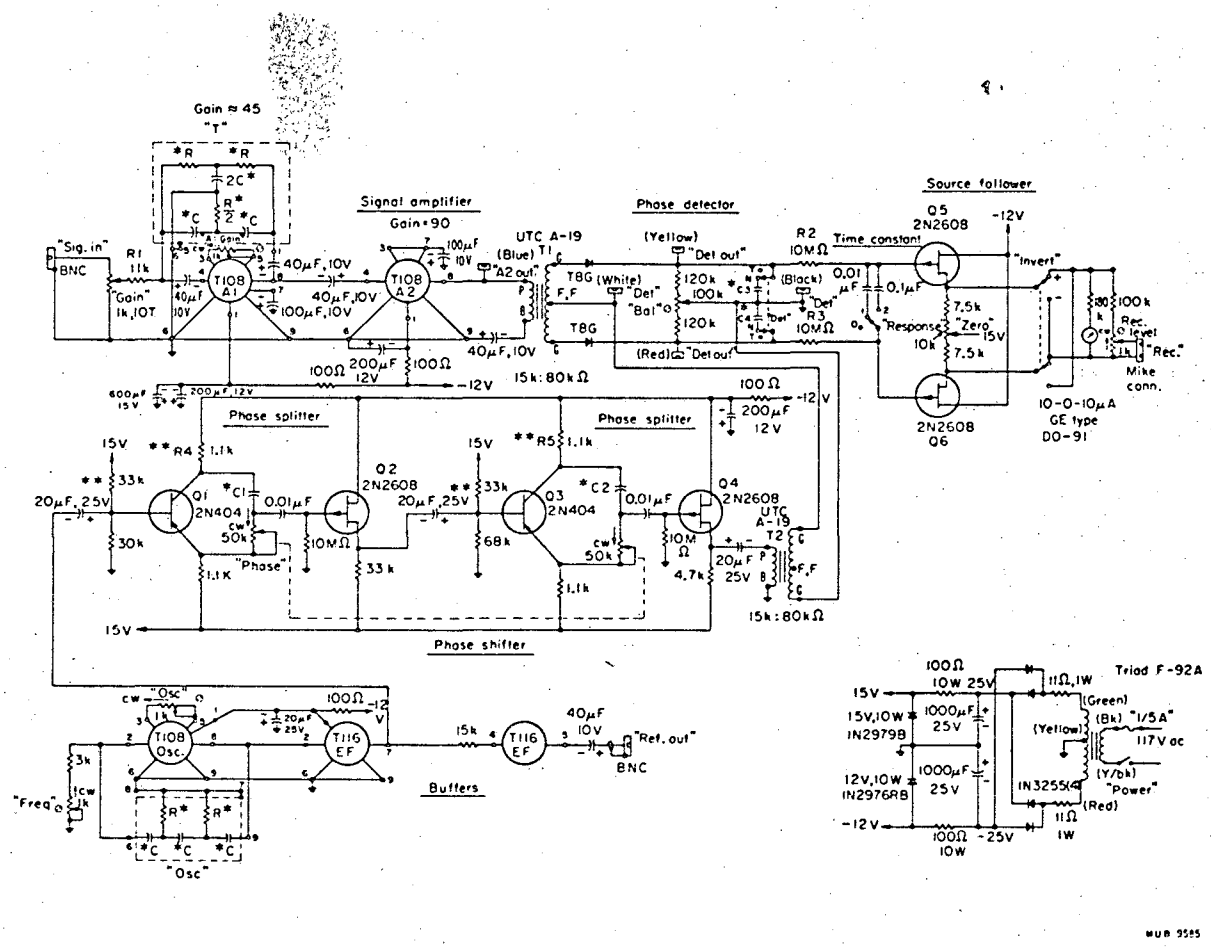
Gain ≈ 45
"T"
Signal amplifier
Gain=90
Phase detector
Source follower
Phase splitter
Phase splitter
Phase shifter
Buffers
"Sig. in"
BNC
R1 11k
"Gain" 1k, 10T
T108 A1
T108 A2
40μF, 10V
100μF, 10V
100μF 10V
"A2 out"
UTC A-19
T1
(Blue)
(Yellow)
"Det out"
T8G (White)
"Det"
"Bal"
T8G
(Red)
"Det out"
120k
100k
120k
R2 10MΩ
R3 10MΩ
Time constant
0.01 μF
0.1μF
(Black)
"Response"
"Zero"
7.5k
10k
7.5k
15V
Q5 2N2608
-12V
"Invert"
100k
Rec. level
"Rec."
Mike conn.
10-0-10μA GE type DO-91
2N2608 Q6
100Ω 200μF 12V
100Ω
-12V
15k:80kΩ
600μF 15V
200μF, 12V
100Ω
200μF 12V
-12V
15V
R4 1.1k
33k
20μF, 25V
30k
Q1 2N404
C1
0.01μF
50k
"Phase"
1.1K
Q2 2N2608
10MΩ
33k
20μF, 25V
15V
R5 1.1k
33k
68k
Q3 2N404
C2
0.01μF
50k
1.1k
Q4 2N2608
10MΩ
4.7k
20μF 25V
UTC A-19
T2
15k:80kΩ
15V
"Osc"
T108 Osc.
3k
1cw 1k
"Freq"
"Osc"
100Ω -12V
20μF 25V
T116 EF
15k
T116 EF
40μF 10V
"Ref. out"
BNC
100Ω 10W 25V
15V
15V, 10W IN2979B
1000μF 25V
12V, 10W IN2976RB
1000μF 25V
-12V
100Ω 10W
-25V
11Ω, 1W
Triad F-92A
(Green)
(Bk) "1/5A"
117V ac
(Yellow)
(Y/bk)
"Power"
IN3255
(Red)
11Ω 1W
MUB 9585

Fig. 2

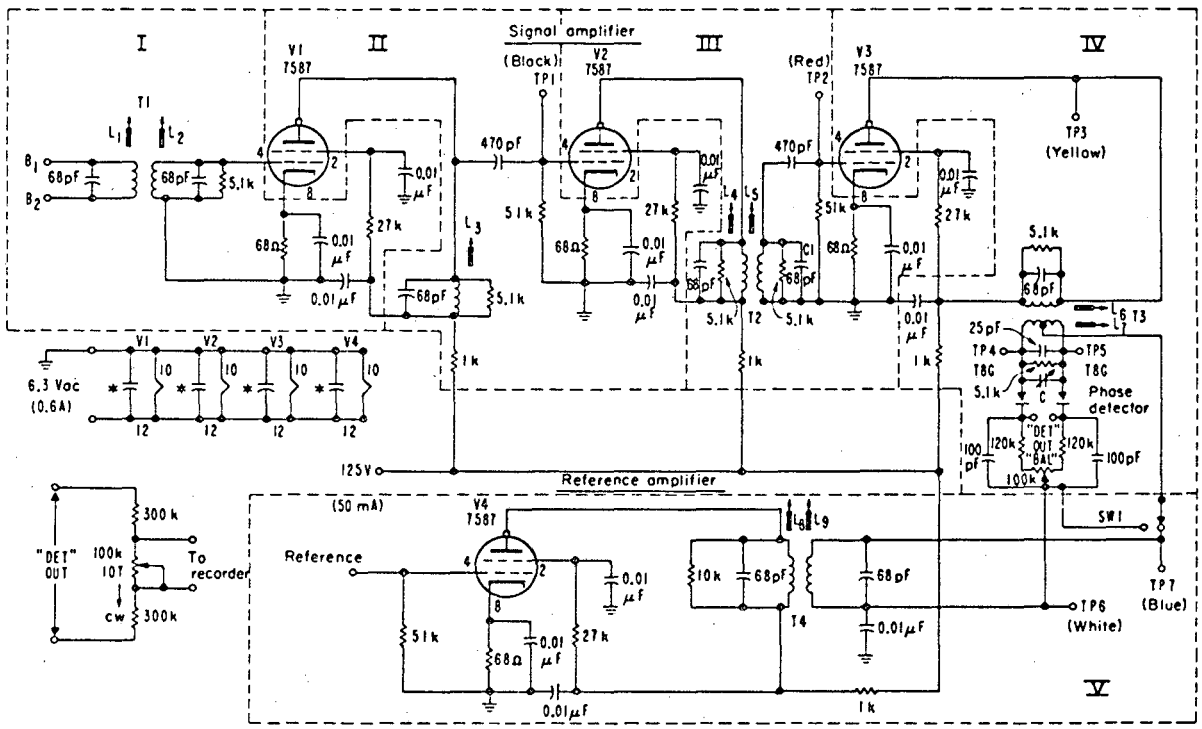
I
II
III
IV
V
Signal amplifier
Reference amplifier
V1 7587
V2 7587
V3 7587
V4 7587
T1
T2
T3
T4
(Black) TP1
(Red) TP2
TP3 (Yellow)
TP4
TP5
TP6 (White)
TP7 (Blue)
B1
B2
68pf
5.1k
0.01 μF
27k
68Ω
470pf
51k
1k
68pf
6.3 Vac (0.6A)
125V
(50 mA)
Reference
10k
25pf
T8G
Phase detector
"DET" OUT
"BAL"
120k
100pf
100k
SW1
300k
100k 10T
To recorder
cw
MUB-9586

This report was prepared as an account of Government sponsored work. Neither the United States, nor the Commission, nor any person acting on behalf of the Commission:

A. Makes any warranty or representation, expressed or implied, with respect to the accuracy, completeness, or usefulness of the information contained in this report, or that the use of any information, apparatus, method, or process disclosed in this report may not infringe privately owned rights; or

B. Assumes any liabilities with respect to the use of, or for damages resulting from the use of any information, apparatus, method, or process disclosed in this report.

As used in the above, "person acting on behalf of the Commission" includes any employee or contractor of the Commission, or employee of such contractor, to the extent that such employee or contractor of the Commission, or employee of such contractor prepares, disseminates, or provides access to, any information pursuant to his employment or contract with the Commission, or his employment with such contractor.