UCRL-16632, Rev. 3

# University of California

# Ernest O. Lawrence Radiation Laboratory

"DO-IT-YOURSELF" LOCK-IN AMPLIFIERS--
RADIO AND AUDIO FREQUENCIES

TWO-WEEK LOAN COPY

*This is a Library Circulating Copy which may be borrowed for two weeks. For a personal retention copy, call Tech. Info. Division, Ext. 5545*

Berkeley, California

## DISCLAIMER

This document was prepared as an account of work sponsored by the United States Government. While this document is believed to contain correct information, neither the United States Government nor any agency thereof, nor the Regents of the University of California, nor any of their employees, makes any warranty, express or implied, or assumes any legal responsibility for the accuracy, completeness, or usefulness of any information, apparatus, product, or process disclosed, or represents that its use would not infringe privately owned rights. Reference herein to any specific commercial product, process, or service by its trade name, trademark, manufacturer, or otherwise, does not necessarily constitute or imply its endorsement, recommendation, or favoring by the United States Government or any agency thereof, or the Regents of the University of California. The views and opinions of authors expressed herein do not necessarily state or reflect those of the United States Government or any agency thereof or the Regents of the University of California.

Submitted to
Nuclear Instruments and Methods

UCRL-16632, Rev. 3
Preprint

UNIVERSITY OF CALIFORNIA

Lawrence Radiation Laboratory
Berkeley, California

AEC Contract No. W-7405-eng-48

# "DO-IT-YOURSELF" LOCK-IN AMPLIFIERS--RADIO AND AUDIO FREQUENCIES

Kenneth W. Lamers

October 12, 1966

# "DO-IT-YOURSELF" LOCK-IN AMPLIFIERS-- RADIO AND AUDIO FREQUENCIES*

Kenneth W. Lamers

Lawrence Radiation Laboratory
University of California
Berkeley, California

October 12, 1966

## ABSTRACT

We describe two specific lock-in amplifiers, one designed for radio frequencies (rf), and the other for audio (af). Both have been built and tested by chemists with limited electronics backgrounds.

The af unit which uses commercial circuit modules, was designed for an electron-spin-resonance spectrometer locking a klystron's frequency to that of a resonant cavity. The lock-in amplifier has been adapted to nuclear-magnetic-resonance work by combining it with a marginal oscillator. The frequency range is 40 to 20 000 Hz, but this is easily extended.

The rf unit, designed for measuring differential pressures on the order of 0.1 μ with an accuracy of several percent, can detect capacitance changes on the order of $10^{-18}$ F. Although designed for 2.7 MHz, it can be adapted to other radio frequencies. The rf unit uses Nuvistor tubes to minimize the instability problems normally encountered at radio frequencies.

## INTRODUCTION

High-performance lock-in amplifiers are commercially available, but in many cases the price is prohibitive for experimenters with limited funds. Furthermore, some of these units incorporate features unnecessary to a given application, and the additional complexity is undesirable. Also, commercial lock-in amplifiers do not yet encompass the entire radio-frequency spectrum. In some cases one has no alternative but to design his own. The lock-in amplifiers described here are relatively easy to build and test. Proper testing requires an oscilloscope and a signal generator, but our chemists have had little trouble in adapting to these instruments. Additional information in the form of photographs, templates, construction details, and test procedures is available.[1]

The af unit is designed around commercial circuit modules so that much of its circuitry need not be fabricated. Performance compares favorably with specifications published for some commercial units, but ours is less flexible in selecting frequency. It is best used in applications where frequency changes are seldom made, but it can be adapted to variable-frequency operation. Fixed-frequency operation is quite suitable for many applications, however, and reduces complexity of the instrument.

The rf lock-in amplifier does not employ circuit modules, but uses Nuvistor tubes instead. Nuvistors, which are much smaller than conventional tubes, offer advantages at radio frequencies, as discussed later.

## GENERAL CONSIDERATIONS

Lock-in amplifiers are discussed elsewhere,[2] so this discussion is somewhat limited. Basically, a lock-in amplifier does much the same thing as a tuned amplifier but does it better. The principal difference is that lock-in amplifiers are phase-sensitive. Also, they can operate at bandwidths very much narrower than are possible with a conventional tuned amplifier operating at the same frequency. The reasons that lock-in amplifiers can operate at such narrow bandwidths are: (a) the information (signal) sought is amplitude-modulated by a reference, usually of audio frequency or higher; (b) the reference also gates a synchronous detector that responds to the gating frequency only; and (c) if the reference frequency changes, the gating changes correspondingly, so that the lock-in always remains "in tune."

Lock-in techniques are commonly used to recover signals 40 dB below the ambient noise level. These techniques are very effective because: (a) they minimize noise generated by the amplifying devices used;[3] (b) they reduce white noise associated with the signal inversely as the square root of bandwidth (the degree to which bandwidth can be reduced is related to the highest frequency of the information sought); and (c) they discriminate against noise at the "tuned" frequency, but of random phase.

Lock-in techniques minimize noise generated by the amplifying devices used because: (a) the signal is modulated to translate its spectra from a band centered around zero frequency to a band centered about a higher frequency (the modulation frequency);[4] (b) most amplifying devices

have noise spectra that vary as the reciprocal of frequency;[5] and (c) translation to a higher frequency moves the signal to a frequency where less noise is introduced by the amplifying devices used. In general, the modulating frequency should be greater than 100 Hz when vacuum-tube amplifiers are used and greater than 1000 Hz when transistor amplifiers are used.

## AUDIO-FREQUENCY LOCK-IN AMPLIFIER

The principal components are shown in Fig. 1. The af unit (Fig. 2 and Table I) uses three linear-amplifier modules. One amplifier in conjunction with a network comprises the oscillator. Another type of module includes three emitter-followers in one package. Most frequency-determining elements (a parallel-T network for the first amplifier stage and a network for the oscillator) are fabricated into blank containers supplied by the module manufacturer. A preamplifier which uses two linear-amplifier modules has been described elsewhere.[1]

The frequency range, determined by the transformers used, is approximately 40 to 20 000 Hz. This range can be extended if the transformers are omitted.[2] The gain (dc out/rms in) is about 3000. The equivalent input noise measured 1 μV rms at 560 Hz with the input terminals shorted and a 2-sec time constant. Linearity checked better than ±1% of full scale with dc outputs up to ±2V.

## RADIO-FREQUENCY LOCK-IN AMPLIFIER

The rf unit was designed for measuring differential pressures on the order of 0.1 μ with an accuracy of several percent. When the unit was designed, commercial micromanometers of sufficient sensitivity were not available, and so we designed our own. For reasons described elsewhere,[6,7] we elected to sense pressure difference with a membrane manometer, constructed like a differential capacitor. The capacitor forms two legs of a resonant-bridge network excited by a 2.7-MHz source (Fig. 3). Bridge output is amplified and detected with the lock-in detector unit shown in Fig. 4. The frequency of 2.7 MHz was chosen for several reasons,[6] some theoretical and some practical.

The rf unit was not designed around circuit modules because (a) most modules with adequate frequency response are subject to oscillation, so we might not have been able to realize as much gain; (b) the signal amplifier should be tuned, so there is no particular advantage to wide-band devices -- the gain-bandwidth product is wasted; (c) high-frequency modules were more expensive; if modules were used, the rf unit would have cost about three times as much as it did with Nuvistors; and (d) Nuvistors operate at higher voltages, so the output levels are higher and the need for a dc amplifier is eliminated in some cases.

Nuvistor tubes, which minimize duplication problems, are used in the rf unit because (a) the unit was to be duplicated and operated by those with little or no electronic background (transistors were not used because of their "loose" tolerances; good design can compensate for this, but engineering funds were limited); (b) Nuvistors are very small and generate

little heat, which permits us to confine them to well-shielded compartments, thus minimizing instability problems; and (c) their combination of high transconductance with low interelectrode capacitance permits considerable gain without neutralization.[8]

Performance, as related to the original application is described in reference 7. The important specifications for the modified unit are (a) gain (dc out/rms in) is approximately 2700, depending upon source resistance; (b) signal-channel bandwidth is 220 kHz; and (c) linearity is approximately 1% of full scale at outputs up to ±2.4 V. (Input noise was not measured, but we were able to detect capacitance changes on the order of $10^{-18}$ F using the unit of reference 7.)

## APPLICATIONS

The af unit was designed for an electron-spin-resonance spectrometer now being developed at this laboratory. Two lock-in amplifiers are used, one for automatic frequency control (12 kHz), another for the signal channel (560 Hz). We have adapted the af unit to nuclear-magnetic-resonance work, using it with a marginal oscillator to detect the nuclear resonant frequency of a sample exposed to a magnetic field. This frequency, directly proportional to field strength, can be measured with precision and affords an accurate measurement of field intensity. Another application involves automatic frequency tracking when the magnetic field is varied.

The rf unit was designed for measuring very small atomic concentrations. These concentrations are converted to pressure differentials,

then sensed with a membrane manometer, as discussed earlier. In achieving the design objective, we were able to detect capacitance changes on the order of $10^{-18}$ F. This unusual sensitivity to dielectric properties could be useful in other areas; we are considering its application to diagnostic studies of gaseous media. Another application involves the detection of light modulated at 2.7 MHz.

## ACKNOWLEDGMENTS

The af unit was designed for an electron-spin-resonance spectrometer being developed under the direction of Professor H. S. Johnston, Inorganic Materials Research Division. The rf unit was designed for a differential micromanometer developed under the direction of Professor D. N. Hanson, Department of Chemical Engineering. The manometer was developed in collaboration with Dr. Peter Rony, now affiliated with the Monsanto Chemical Company, St. Louis, Missouri.

## FOOTNOTES AND REFERENCES

*Work done under the auspices of the U. S. Atomic Energy Commission.

1. Kenneth W. Lamers, Lawrence Radiation Laboratory Report UCRL-16632, January 1966.

2. R. D. Moore, Lock-in Amplifiers for Signals Buried in Noise, Electronics 35, No. 23, 40 (1962).

3. Lock-in amplifiers are commonly driven by other devices that generate noise, a receiver for example. The lock-in technique minimizes noise generated by devices preceding it, provided that those noises are not modulated by the reference.

4. Harold S. Black, Modulation Theory (D. Van Nostrand Company, Inc., New York, 1953), p. 39.

5. R. D. Moore and O. C. Chaykowsky, Modern Signal Processing Technique for Optimal Signal to Noise Ratios, Princeton Applied Research Technical Bulletin 109, 1963.

6. Kenneth W. Lamers, Lawrence Radiation Laboratory Report UCRL-11218, Part I, October 1964.

7. Peter R. Rony, Lawrence Radiation Laboratory Report UCRL-11218, Part II, April 1965.

8. R. Landee, D. Davis, and A. Albrecht, Electronic Designer's Handbook (McGraw-Hill Book Company, Inc., New York, 1957), pp. 7-53.

Table I. Values for frequency-sensitive components of Fig. 2

| Component | R (kΩ) | C (μF) | $C_{560\ Hz}$ (μF) |
|---|---|---|---|
| Parallel-T network | 3 | ~53/f[a] | 0.10 |
| Oscillator network | 3.6 | ~18/f[b] | 0.033 |
| $C_1$ and $C_2$[c] | | ~ 4/f | 0.0068 |
| $C_3$ and $C_4$[d] | | ~ 5.6/f | 0.01 |

[a]From reference 8, page 16-24.

[b]From reference 8, page 6-40.

[c]Reactance ≈ 40 kΩ at operating frequency.

[d]Dependent upon ripple tolerable.

## FIGURE LEGENDS

Fig. 1. Block diagram of the af unit. The modulator, which is external to the af unit, can take many forms, electrical or mechanical.

Fig. 2. Schematic diagram of the af unit. Modules T-108 and T-116 are manufactured by Engineered Electronics Company. All resistors are 1/4 W, 5% carbon, unless indicated otherwise. Phase control is a 2-gang, 2W, Ohmite CCU-5031. All capacitors not polarized are Mylar. BNC connectors are insulated from ground, DAGE 4890-1. Components indicated by * are frequency-sensitive; their values can be deduced from Table I. When operating at 12 kHz, the capacity unbalance of T1 caused detector unbalance and zero shift with phase. This was corrected by substituting a UTC type A-22 for T1.

Fig. 3. Schematic diagram of the rf lock-in generator unit. All resistors are 1/4W. Inductance $L_1$ comprises 64 turns of No. 32 Formvar wound on National Radio Corp. form XR50; $L_2$ is 25 turns of No. 22 Formvar wound on form XR50. The crystal (type CR-18/U) operates at 2762.500 kHz. Capacitors marked with an asterisk are 1000-pF, ceramic feed-through type; those designated SM are silver-mica.

Fig. 4. Schematic diagram of the rf lock-in detector unit. The 27-kΩ resistors are 1/2W; all others are 1/4W. Asterisks denote 1000-pF ceramic feed-through capacitors; all other picofarad capacitors are silver-mica, and all microfarad capacitors are Mylar. C is a 7- to 45-pF ceramic trimmer. All inductors

comprise 64 turns of No. 32 Formvar wound on National Radio Corp. form XR50; $L_7$ is center-tapped. Transformers T1 through T4 comprise the relevant inductors, mounted 5/8 in. between centers. The primary of T1 should be connected series-resonant if the source resistance is less than the inductive reactance of $L_1$ (700 Ω at 2.7 MHz). The roman numerals indicate the compartments in which the components are mounted. A low-impedance potentiometric recorder can be driven by a divider across the DET OUT terminals, as shown. The power supply is not shown.

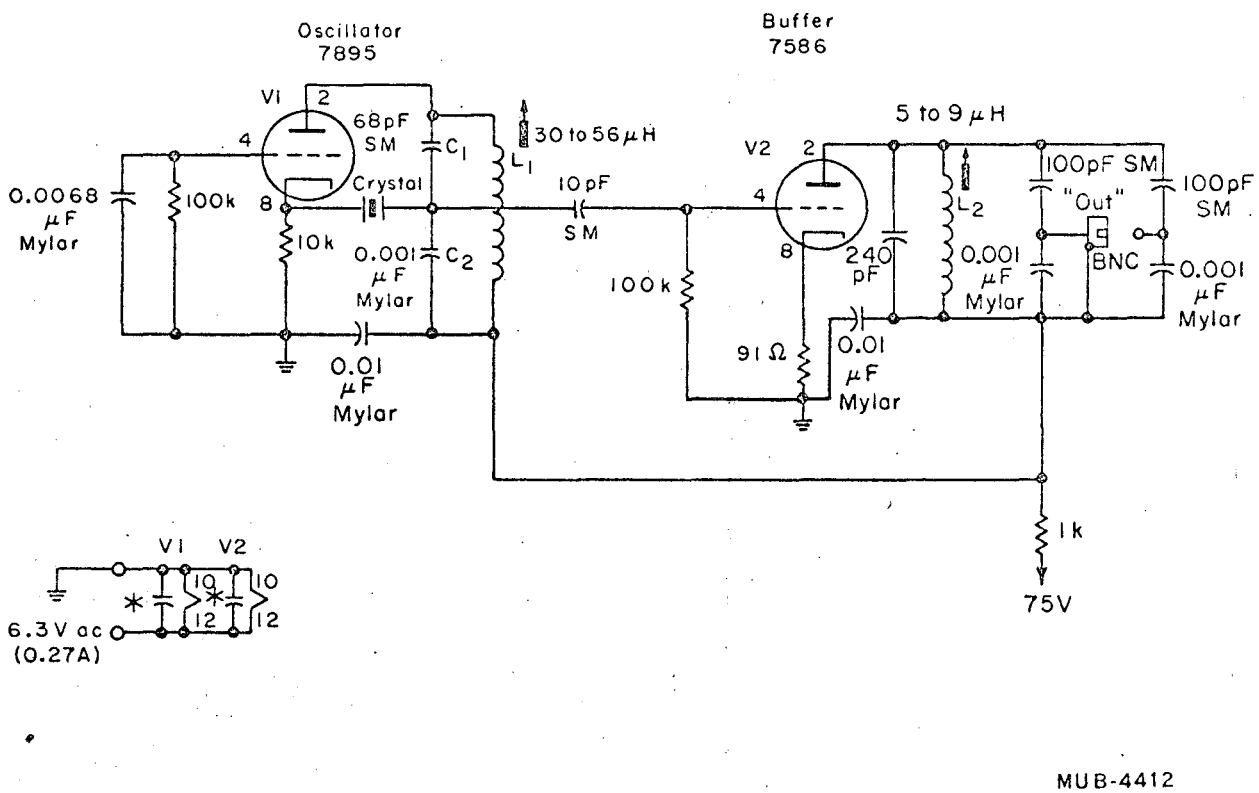
Oscillator
7895
Buffer
7586
V1
V2
68pF
SM
Crystal
C1
C2
L1
L2
30 to 56 μH
10pF
SM
5 to 9 μH
0.0068
μF
Mylar
100k
10k
0.001
μF
Mylar
0.01
μF
Mylar
100k
91 Ω
240
pF
0.01
μF
Mylar
0.001
μF
Mylar
100pF SM
"Out"
BNC
100pF
SM
0.001
μF
Mylar
1k
75V
6.3 V ac
(0.27A)
MUB-4412

Fig. 3

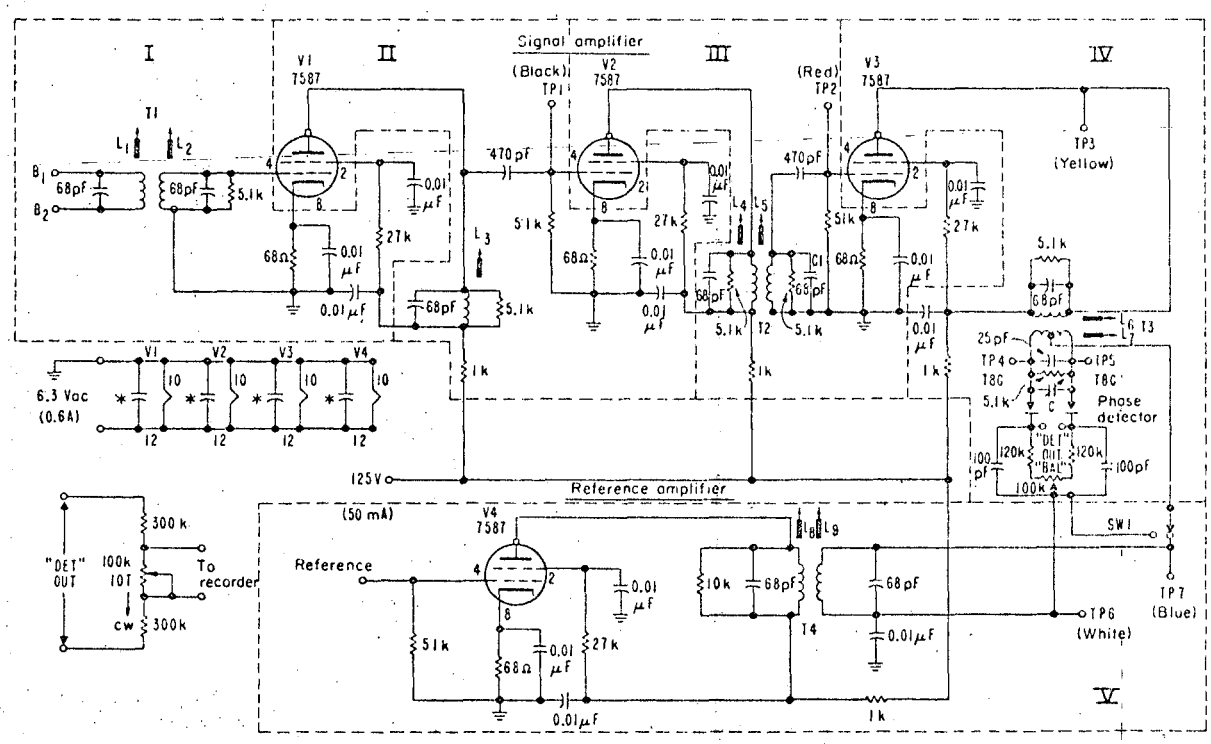
Signal amplifier
Reference amplifier
I
II
III
IV
V
V1 7587
V2 7587
V3 7587
V4 7587
(Black) TP1
(Red) TP2
TP3 (Yellow)
TP4
TP5
TP6 (White)
TP7 (Blue)
Phase detector
6.3 Vac (0.6A)
125V
(50 mA)
Reference
"DET" OUT
To recorder
SW1
MUB-5586

Fig. 4

This report was prepared as an account of Government sponsored work. Neither the United States, nor the Commission, nor any person acting on behalf of the Commission:

A. Makes any warranty or representation, expressed or implied, with respect to the accuracy, completeness, or usefulness of the information contained in this report, or that the use of any information, apparatus, method, or process disclosed in this report may not infringe privately owned rights; or

B. Assumes any liabilities with respect to the use of, or for damages resulting from the use of any information, apparatus, method, or process disclosed in this report.

As used in the above, "person acting on behalf of the Commission" includes any employee or contractor of the Commission, or employee of such contractor, to the extent that such employee or contractor of the Commission, or employee of such contractor prepares, disseminates, or provides access to, any information pursuant to his employment or contract with the Commission, or his employment with such contractor.