UCRL-1666

UNCLASSIFIED

UNIVERSITY OF CALIFORNIA — BERKELEY

TWO-WEEK LOAN COPY

This is a Library Circulating Copy which may be borrowed for two weeks. For a personal retention copy, call Tech. Info. Division, Ext. 5545

RADIATION LABORATORY

DISCLAIMER

This document was prepared as an account of work sponsored by the United States Government. While this document is believed to contain correct information, neither the United States Government nor any agency thereof, nor the Regents of the University of California, nor any of their employees, makes any warranty, express or implied, or assumes any legal responsibility for the accuracy, completeness, or usefulness of any information, apparatus, product, or process disclosed, or represents that its use would not infringe privately owned rights. Reference herein to any specific commercial product, process, or service by its trade name, trademark, manufacturer, or otherwise, does not necessarily constitute or imply its endorsement, recommendation, or favoring by the United States Government or any agency thereof, or the Regents of the University of California. The views and opinions of authors expressed herein do not necessarily state or reflect those of the United States Government or any agency thereof or the Regents of the University of California.

UCRL-1668
Unclassified-Chemistry Distribution

UNIVERSITY OF CALIFORNIA

Radiation Laboratory

Contract No. W-7405-eng-48

THE HEAT OF SOLUTION OF NEPTUNIUM METAL AND THE HEATS OF FORMATION OF SOME NEPTUNIUM CHLORIDES. A MICROCALORIMETER FOR HEAT OF SOLUTION MEASUREMENTS

Edgar F. Westrum, Jr. and LeRoy Eyring

February 7, 1952

Berkeley, California

THE HEAT OF SOLUTION OF NEPTUNIUM METAL AND THE HEATS OF FORMATION OF SOME NEPTUNIUM CHLORIDES. A MICROCALORIMETER FOR HEAT OF SOLUTION MEASUREMENTS

Edgar F. Westrum, Jr.* and LeRoy Eyring**
Radiation Laboratory and Department of Chemistry
University of California, Berkeley, California

February 7, 1952

ABSTRACT

The heat of reaction of milligram amounts of neptunium metal with 1.5 M HCl containing 0.005 M Na_2SiF_6 was found to be -165.7 ± 0.2 kcal per mole for the apparent molal heats of formation of neptunium(IV) and neptunium(III) in 1.0 M HCl. By comparing the heats of solution of other isomorphous actinide chlorides, those of $NpCl_3$ and $NpCl_4$ are estimated and heats of formation of 216 ± 1 kcal per mole for $NpCl_3$ and 238 ± 1 kcal per mole for $NpCl_4$ are obtained. A convenient precise calorimeter suitable for the determination of heats of relatively rapid reactions for milligram quantities of materials is described and its performance indicated.

---

*Department of Chemistry, University of Michigan, Ann Arbor, Michigan.

**Department of Chemistry and Chemical Engineering, The State University of Iowa, Iowa City, Iowa.

THE HEAT OF SOLUTION OF NEPTUNIUM METAL AND THE HEATS OF FORMATION OF SOME NEPTUNIUM CHLORIDES. A MICROCALORIMETER FOR HEAT OF SOLUTION MEASUREMENTS[1]

Edgar F. Westrum, Jr.* and LeRoy Eyring**
Radiation Laboratory and Department of Chemistry
University of California, Berkeley, California

February 7, 1952

The increasing interest in, and availability of, the synthetically produced transuranium elements occasions a need for precise thermodynamical and thermochemical data on these elements and their compounds for the understanding and correlation of the chemical behaviour of these substances. The procurement of thermochemical data on the transuranium elements has involved, and perhaps will continue to involve, quantities of material on the order of a milligram because of the exceedingly small quantities of many of these synthetic elements available and the health hazard of working with large quantities of highly radioactive alpha emitters. Furthermore, the generation of energy within the sample by radioactive disintegration and the low thermal conductivities of the metals and compounds make the

---

[1]This research was performed under the auspices of the U. S. Atomic Energy Commission mainly in 1946-47 and was reported in part by Edgar F. Westrum, Jr. in U. S. Atomic Energy Commission Declassified Document AECD-1903 (April, 1948). Presented at the 118th National Meeting, American Chemical Society, Chicago, September 6, 1950.

*Department of Chemistry, University of Michigan, Ann Arbor, Michigan.

**Department of Chemistry and Chemical Engineering, The State University of Iowa, Iowa City, Iowa.

achievement of a uniform temperature throughout a massive sample difficult. The minute amounts of transuranium elements available and the correspondingly small enthalpy change produced, together with consideration of the duration of the reaction dictated the construction of a microcalorimeter of small heat capacity and considerable temperature sensitivity. The thermostat, chassis, and circuits of a calorimeter already described[2] were modified. Only important changes will be described. The calorimeter was designed to measure precisely and accurately the heat evolved in solution processes taking place in less than ten minutes on milligram amounts of metals. A more elaborate calorimeter needed to measure thermal effect occuring over an hour, as for example in the solution of a difficultly soluble oxide, has been constructed and will be described in another paper.

Thermostat. The water bath used by Westrum and Robinson[2] was modified in that the toluene-mercury control unit was replaced by one giving more accurate temperature control and requiring less maintenance. This thermoregulator consists of an electrical bridge including a resistance thermometer and three other arms of manganin resistors immersed in transformer oil in the thermostat. The resistance thermometer incorporated about 0.65 kilometers of No. 40 B. and S. gauge, enamelled, copper wire wound bifilarly on a hollow stainless steel cylinder about 10 cm in diameter and 35 cm long with an insulation of 0.0025 cm thick polystyrene sheet. A protective stainless steel sheath was welded over the winding and the cylinder was so placed that a good fraction of the turbulent flow of the bath passed

through it. The bridge unbalance signal due to a thermoresistance change of the copper wire is fed into a breaker type amplifier of gain approximately 10^5 and enhanced sufficiently to activate a thyratron circuit including the thermostat heater. The proportional control yields maximum fluctuations smaller than a thousandth of a degree at the calorimeter position over periods longer than the duration of the runs.

Calorimeter. The general features of the calorimeter may be seen by reference to Figure 1. It is contained within a stainless steel submarine (E) which is supported on a small cross sectional shaft of the same material. The two external leads to the unit (A) are of No. 12 B. and S. gauge, copper wire making contact through massive copper binding posts (B) within a stainless steel hood. The fine manganin leads (C) to the calorimeter are imbedded in paraffin (G) down through the support shaft. The calorimeter itself is supported by a machined, thin walled lucite tube terminating in a screw thread at the lower end and broadening out at the top end to provide a mounting for the minute copper jacks and lugs used to connect the thermometer and heater. The submarine provides a dead air gap of a centimeter, the optimum width for the present specification from the considerations of White.[3] The reaction chamber is machined from tantalum rod and contains about 8 cc of solution during operation. It is 2.5 cm in diameter and has 0.2 mm thick walls. A screw closure near the top provides a vapor tight seal against a lapped seat; the threaded connection to the lucite shaft is also vapor tight. The portion of the cylindrical shell in contact with the solution is bifilarly wound with about 16 meters of No. 40 B.

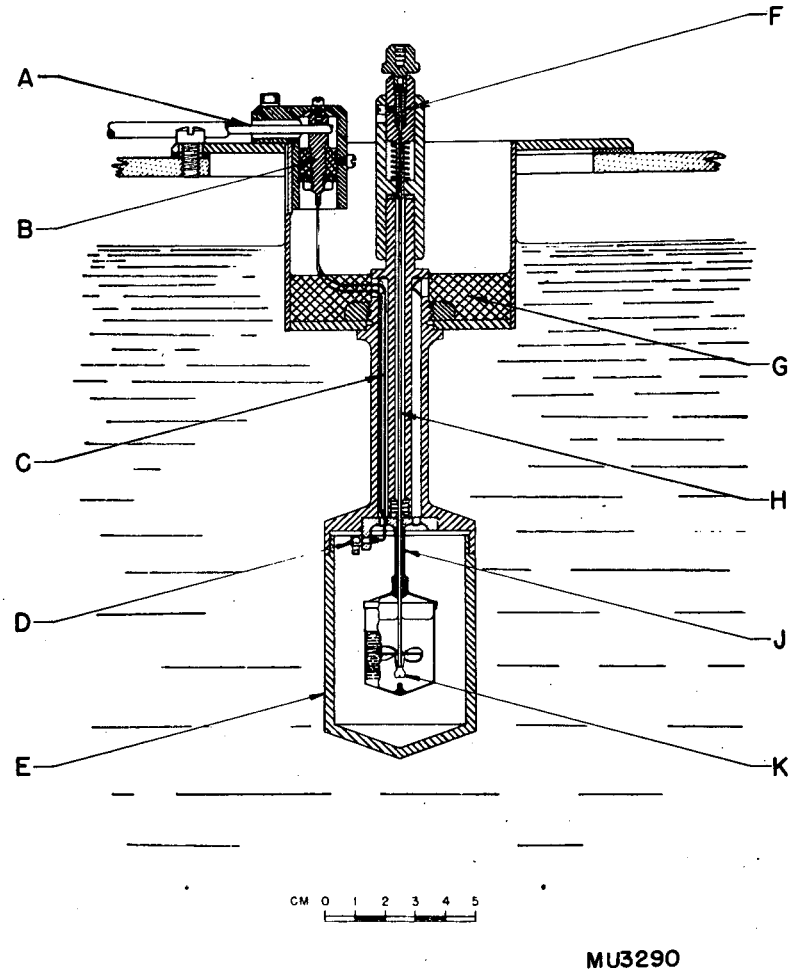

Fig. 1

Legend: Schematic Cross-sectional diagram of Microcalorimeter.

and S. gauge, annealed, enamelled copper wire which serves in the double capacity of a resistance thermometer and a heater coil with a very small lag. Two 3 cm lengths of this wire extend across the air gap and soldered in relatively massive "micro" lugs and held by a copper set screw in good contact over a considerable area of the corresponding jacks (D) mounted in the lucite support base (J) with a copper set screw. Manganin leads were used between (D) and (B). The solution is stirred by means of a tetradentive platinum propellor driven by a slender quartz shaft (H) about a millimeter in diameter. The top end of the quartz shaft is clamped in a plastic collet in the stirring head mechanism (F) which is driven by a 75 rpm synchronous motor connected through a flexible shaft.

The samples to be dissolved were contained in fragile glass sample bulbs similar to those already described[4] except that the present bulbs were especially thin walled with flat bottoms to facilitate breaking and had a capacity of only about fifty microliters. These bulbs were sealed onto the stirring shaft just below the propellor and were shattered by means of a two millimeter depression of the stirring shaft without interference with the rotational motion. A protrusion was machined into the calorimeter bottom to act as an anvil upon which to break the bulb.

Control and Measurement Circuits. A double pole switch was introduced into the resistance thermometer circuit to make possible an interconnection with the energy circuit. The measurement branch of the energy circuit was modified by the introduction of a potential divider in parallel with the

thermometer-heater and an auxiliary Rubicon Type B potentiometer to permit a determination of the resistance of the thermometer while in use as a heater. A timer circuit consisted of a standard 1000 cycle oscillator with dividing and scaling circuits to provide pulses at four second intervals. These impulses were used to activate a latching relay so that precisely determined time intervals were obtained.

Semi-automatic operation. An ingenious, self-balancing galvanometer circuit engineered by H. P. Robinson made the operation of the calorimeter semi-automatic by providing a "temperature" versus time trace covering the entire experimental period of the run, thus eliminating the necessity of balancing the thermometer circuit periodically and interpolating the dial setting with a high sensitivity galvanometer. The device consisted of a high sensitivity, self-balancing galvanometer which, by the development of a counter potential (exactly equal to that developed across the bridge involving the resistance thermometer) maintained itself in a null position defined by a photocell and by plotting the counter potential on a Leeds and Northrup Speedomax recorder yielded a function nearly linear with respect to temperature as a function of time during the drift, heat input, and reaction intervals. The instrument performed very well and a number of calibration runs were made with its assistance, but the slight factor of sensitivity lost by its use made it undesireable during the neptunium runs.

Operation and performance. The relative temperature sensitivity of the calorimeter is about 2×10^{-5} degrees and the total heat capacity is

about nine calories per degree. Consequently, to obtain results accurate to a few tenths of a percent, a thermal process liberating about 0.2 calories is required. This corresponds to a temperature rise of 0.02° C or to about 240 micrograms of a transuranium element with a heat of solution of the order of 200 kilocalories per mole. The thermal leakage modulus of the calorimeter was observed to be 2×10^{-2} minute^{-1}. The observed drift of the combined heat of stirring and energy required for the operation of the resistance thermometer was about 2×10^{-4} degrees per minute.

A normal pattern of determination in the calorimeter involves: (a) loading and assembly of the calorimeter at a temperature a few tenths of a degree below 25° C, (b) electrical calibrations of the calorimeter at a rate and with an amount of energy comparable to that obtained during the solution of the sample, (c) observation of the foredrift, breaking the sample container, and observation of the afterdrift until a drift consistent with the temperature of the calorimeter is obtained and (d) more electrical energy inputs. Breaking the bulb was a process which blank runs indicated involved no detectible net energy change—probably the result of the approximate cancellation of several effects.

Calibration. Inasmuch as the heater was wound on the outside of the calorimeter it was necessary to establish that the lag was small and that superheating of the coil did not occur. Auxiliary experiments established a lag of less than ten seconds between the production of energy in the coil and its 99 percent registration on the galvanometric system of the resistance thermometer. The absence of superheating of the coil sufficient to

make the correction for heat exchange invalid was demonstrated by determination of the resistance of the heater during a sequence of alternate drifts and energy inputs.

Calibration of the calorimeter included (a) calculation of the energy equivalent of the weighed parts, and (b) the determination of the heat capacity by electrical energy inputs at rates from one fourth to four times that employed in the reactions studied. These determinations had a precision better than ± 0.2 percent and were in agreement with the calculated heat capacity within the same limit. The above comparison involves the calibration of the resistance thermometer on a centrigrade scale, which was achieved by immersing the calorimeter covered by a thin rubber sac directly (submarine not in place) into the thermostat and comparison of the decade box settings with the temperature of a calibrated differential thermometer over a two degree range. A defined thermochemical calorie equal to 4.1840 absolute joules is employed.

Three chemical calibrations were likewise made to establish the precision and accuracy of the instrument for heat of reaction use. These were the heat of solution of KCl and KNO_3 in water and the heat of solution of magnesium metal crystals in 1.0 M HCl. The results of these runs are indicated in Table 1. They compare very favorably with literature values.[5]

Table 1

Run Number	Sample Weight (mg)	Heat evolved (calories)	ΔH (kcal.)
Observed Molal Heat of Solution of KCl in Water[6]			
17	11.178	0.624	4.16*
18	14.250	0.793	4.15*
19	15.602	0.875	4.18*
Observed Molal Heat of Solution of KNO_3 in Water			
4	12.747	1.052	8.34
5	8.168	0.6757	8.36
14	8.133	0.6716	8.35*
15	7.522	0.62045	8.35*
Observed Molal Heat of Reaction of Mg in 1.0 molar HCl			
45	1.109	5.056	-111.2
46	0.2918	1.3318	-111.3
47	0.1301	0.5937	-111.3

*Values marked with an asterisk were obtained by use of the semi-automatic circuit.

Neptunium metal. The neptunium metal was prepared on the milligram scale by a process already described[7] and the spectrochemical analysis reported there is also typical of these samples and the calorimeter solution after dissolution of the metal. Five separate determinations were made on the heat of reaction of neptunium metal with the 1.500 M HCl in the presence of 0.00500 M Na_2SiF_6. It was noted that attempts made to dissolve the metal in the absence of fluosilicate yielded a black residue containing an appreciable fraction of the neptunium. Although the nature of the residue

was not ascertained it is believed that this is analogous to the black residue obtained on the dissolution of pure thorium metal in hydrochloric acid in the absence of a small concentration of fluosilicate. The neptunium metal samples were weighed on an Ainsworth microbalance, placed in thin bottomed glass bulbs, and sealed to the end of the stirring shaft. The hydrochloric acid saturated with hydrogen was weighed into the tantalum shell and the calorimeter assembled. Electrical calibrations were made before and after each run. The data are presented in Table 2.

Table 2

Molal Heat of Reaction of Neptunium Metal in 8.81 gms of 1.500 M HCl and 0.00500 M Na_2SiF_6 at 25° C.

Sample weight (mg, vacuo)	Heat evolved (calories)	Corrected* ΔH (Reaction)(kcal.)
0.456	0.318	-165.7
0.782	0.545	-165.7
1.458	1.0175	-165.9
1.408	0.9808	-165.6
1.906	1.3285	-165.7
		-165.7 ± 0.2

*Includes a correction of 0.4 kcal per mole for vaporization of the solvent.

Discussion

The highly positive value of the neptunium-neptunium(III) couple insures the ready dissolution of neptunium in dilute hydrochloric acid, but the negative value of the (III)-(IV) couple (-0.14 volts in 1 M HCl) is such that dissolved oxygen will oxidize it rapidly to the (IV) state, but not further. The observed heat of solution corresponds therefore to the sum of two reactions in 1.55 M HCl at 298° K:

$$(1)\ Np + 3H^{+}_{(aq)} = Np^{+3}_{(aq)} + 3/2H_{2(g)}$$

$$(2)\ Np^{+3}_{(aq)} + 1/4O_{2(aq)} + H^{+}_{(aq)} = Np^{+4}_{(aq)} + 1/2H_2O_{(aq)}$$

Auxiliary experiments on comparable quantities of neptunium made both in the presence and in the absence of dissolved oxygen in the hydrogen saturated solvent indicated clearly that 3/2 of a mole of hydrogen was evolved in the oxidation of the metal to the (III) state and that oxidation to the (IV) state took place only in the presence of dissolved oxygen and then without further hydrogen evolution. The determination of hydrogen evolved was facilitated by an apparatus designed by us, previously described,[8] and calibrated with dissolution of pure zinc metal. The oxidation state of the neptunium was determined spectrophotometrically. Dissolution experiments were also made on comparable quantities of metal and hydrogen saturated acid in the Beckman spectrophotometer with the instrument present to a prominent neptunium(IV) peak. The immediate appearance of the peak indicated that a very rapid reaction to the (IV) state is involved. The calorimetric solution was observed to contain only neptunium in the (IV) oxidation

state at the end of the run. We have eliminated the possibility that reduction of hydrogen ion is responsible for the oxidation of neptunium(III) to neptunium(IV) in the presence of dissolving neptunium metal.

The over-all calorimetric reaction is, therefore:

$$Np + 4H^{+}_{(aq)} + 1/4O_{2(aq)} = Np^{+4}_{(aq)} + 1/2H_2O_{(aq)} + 3/2H_{2(g)}.$$

Correction for heat of dilution of the acid and the salt at constant ionic strength are negligible and the effect of fluosilicate ion is neglected. Consequently, taking the molal heat of the reaction

$$1/2H_2O_{(l)} = 1/2H_{2(g)} + 1/4O_{2(aq)}$$

as 33.2 kcal,[9] one obtains $\Delta H = -132.5$ kcal for the formation of neptunium(IV) in 1.55 M HCl. From the effect of the HCl concentration on the heat of solution of $ThCl_4$ as a function of acid concentration only and from the rough correlation of heats of dilution and ionic radius noted by Westrum and Robinson[10] a value of -132.9 ± 1 kcal mole^{-1} is obtained for the apparent molal heat of formation of neptunium(IV) in 1 M HCl. Using the best value, -5.5 ± 0.2 kcal, for the heat of oxidation of neptunium(III) ⟶ neptunium(IV) determined from the temperature coefficient of the cell potential[11] yields -127.4 ± 1 as the apparent molal heat of formation of neptunium(III) in 1 M HCl.

To obtain estimates for the heats of formation of the solid neptunium chlorides we estimate the heats of solution of solid compounds in 1.0 M HCl by extrapolation of the experimental data on the heats of solution of $ThCl_4$,[10] UCl_4,[12] UCl_3,[12] and $PuCl_3$,[13,14] as a rough function of ionic radius and hydrogen ion concentration. On this basis values of 216 ± 1 and

238 ± 1 kcal are obtained as the molal heat of formation of crystalline $NpCl_3$ and $NpCl_4$, respectively.

The differences of about a kilocalorie between our values and those calculated by Brewer[12] arise in part from his interpretation of reaction (2) as one involving dissolved rather than gaseous hydrogen. The solution was initially saturated with hydrogen at a slightly lower temperature and our comparable dissolution experiments on this and other transuranium metals on this scale under similar conditions clearly indicate that all (±2 percent) of the hydrogen does escape and that it is virtually saturated with water vapor.

Acknowledgments

We wish to thank Professor G. T. Seaborg for encouragement and advice, Professor B. B. Cunningham for helpful discussions, and H. P. Robinson and Winifred Heppler for technical assistance. We appreciate the use of the neptunium stock purified by T. J. LaChapelle, L. B. Magnusson, and J. C. Hindman.

References

1. This research was reported in part by E. F. Westrum, Jr. in U.S. Atomic Energy Commission Declassified Document AECD-1903 (April, 1948); presented at the 118th National Meeting, American Chemical Society, Chicago, Illinois, September 6, 1950.
2. E. F. Westrum, Jr. and H. P. Robinson, National Nuclear Energy Series, Plutonium Project Record, Vol. 14B, "The Transuranium Elements: Research Papers," Paper No. 6.51 (McGraw-Hill Book Co., Inc., New York, 1949).
3. W. P. White, "The Modern Calorimeter," Reinhold Publishing Corp., New York, 1928.
4. E. F. Westrum, Jr., U.S. Atomic Energy Commission Declassified Document AECD-1903 (1948).
5. a. For KCl, 4.17 kcal per mole from "Selected Values of Chemical Thermodynamic Properties," National Bureau of Standards, Washington, D.C. (1947).

   b. Ibid, for KNO_3 8.37 kcal per mole.

   c. For Mg, 111.32 $\pm$ 0.04 kcal per mole reported by C. H. Shomate and E. H. Huffman, J. Am. Chem. Soc. 65, 1625 (1943).
6. Reported in U.S. Atomic Energy Commission Document MB-IP-186 (April 1, 1947).
7. E. F. Westrum, Jr. and L. Eyring, J. Am. Chem. Soc. 73, 3396 (1951).
8. B. B. Cunningham, Nucleonics 5, No. 5, 62-85 (November, 1949).

9. Unless other sources are indicated, auxiliary thermodynamic data are obtained from "Selected Values of Chemical Thermodynamic Properties," National Bureau of Standards, Washington, D.C. (1947).

10. E. F. Westrum, Jr. and H. P. Robinson, National Nuclear Energy Series, Plutonium Project Record, Vol. 14B, "The Transuranium Elements: Research Papers," Paper No. 6.50 (McGraw-Hill Book Co., Inc., New York, 1949).

11. J. C. Hindman, private communication (1951).

12. L. Brewer, L. Bromley, P. Gilles, and N. Lofgren, Manhattan Project Report, MDDC-1417 (1948).

13. E. F. Westrum, Jr. and H. P. Robinson, National Nuclear Energy Series, Plutonium Project Record, Vol. 14B, "The Transuranium Elements: Research Papers," Paper No. 6.53 (McGraw-Hill Book Co., Inc., New York, 1949).

14. H. P. Robinson and E. F. Westrum, Jr., ibid, Paper No. 6.54.