UCRL-16695

University of California

Ernest O. Lawrence Radiation Laboratory

INTERSTITIAL ORDERING IN VANADIUM

TWO-WEEK LOAN COPY

This is a Library Circulating Copy which may be borrowed for two weeks. For a personal retention copy, call Tech. Info. Division, Ext. 5545

DISCLAIMER

This document was prepared as an account of work sponsored by the United States Government. While this document is believed to contain correct information, neither the United States Government nor any agency thereof, nor the Regents of the University of California, nor any of their employees, makes any warranty, express or implied, or assumes any legal responsibility for the accuracy, completeness, or usefulness of any information, apparatus, product, or process disclosed, or represents that its use would not infringe privately owned rights. Reference herein to any specific commercial product, process, or service by its trade name, trademark, manufacturer, or otherwise, does not necessarily constitute or imply its endorsement, recommendation, or favoring by the United States Government or any agency thereof, or the Regents of the University of California. The views and opinions of authors expressed herein do not necessarily state or reflect those of the United States Government or any agency thereof or the Regents of the University of California.

Submitted to Acta Metallurgica

UCRL-16695

UNIVERSITY OF CALIFORNIA
Lawrence Radiation Laboratory
Berkeley, California

AEC Contract W-7405-eng-48

INTERSTITIAL ORDERING IN VANADIUM

G. Thomas and R. E. Villagrana

February 1966

INTERSTITIAL ORDERING IN VANADIUM

G. Thomas and R. E. Villagrana

Inorganic Materials Research Division, Lawrence Radiation Laboratory,
and Department of Mineral Technology, College of Engineering,
University of California, Berkeley, California

February 1966

In a recent paper dealing with ceramic compounds formed by heating vanadium at low air pressures, Edington and Smallman[1] report experimental data which are almost identical to those reported by us for ordered tantalum-carbon alloys.[2,3] Consequently we believe that the reported transformation[1] is actually that of interstitial ordering viz. the spatial arrangement of the matrix V atoms remains virtually undisturbed, but the interstitial atoms occupy definite crystallographic positions, producing a body centered tetragonal structure as described in ref. 3. Thus, the so called vanadium compound[1] is actually an ordered phase identical to that of $Ta_{64}C$ and the structure should be as shown in fig. 1 where the squares represent vandium unit cells and the circles interstitial atoms in $\langle 0,\frac{1}{2},0\rangle$ octahedral positions. Both the diffraction patterns and micrographs of ref. 1 can be successfully interpreted in terms of such ordered structures. For example, the diffraction patterns of Edington and Smallman are actually superlattice patterns and are in complete agreement with those predicted from the structure of fig. 1. Their sketches of figs. 3a, 4b also satisfy this structure. However the remainder of their diagrams are incompatible with their diffraction patterns (fig. 2a, 7b). If the diffraction patterns are indexed relative to superlattice diffraction spots there are no systematic absences and this is in accord with the space group of the $Ta_{64}C$ structure viz. I4/mmm.

In figs. 3b,c,d and 5b the authors indicate missing diffraction spots in the higher layers of the reciprocal lattice but in the reported diffraction data and some of their sketches these absences are not observed. We conclude therefore that if the authors' diagrams were all consistent with their diffraction data, systematic absences cannot exist. The non observance of superlattice diffraction patterns in apparently ordered areas can be explained if one considers the high degree of order necessary to produce a superlattice diffraction pattern. This is because in certain regions the superlattice pattern is not reinforced due to the different diffracting conditions from domain to domain.

The reciprocal lattice of the ordered structure can be physically described as two interpenetrating, coincident, face centered tetragonal reciprocal lattices. The complete analysis of such structures has been described elsewhere.[3]

The formation of these ordered structures does not take place at high temperatures, but rather on cooling from high temperatures. This can be explained when one considers that the interstitial must be present in a given volume of the specimen in the right proportion to cause the ordering reaction (about 1.5% at .% interstitial). In the case of a thin foil the ordering reaction will first occur in the thinnest regions of the foil.

The micrographs of Edington and Smallman are typical of those expected from ordered alloys containing domain boundaries.[(3-5)] Both foils and bulk specimens exhibit domain contrast. The images of fig. 6, ref. 1 are consistent with those expected from overlapping domain boundaries[3] the exact nature of which can be determined by dark field work. The domains in figs. 7a,c are both high and low angle domain boundaries.[3] Fig. 8 shows high angle domain boundaries (viz. the domains are parallel to the electron beam) on (011). The domain boundaries can take up any orientation, and a single domain can

lie on more than one plane.[3] It is apparent when domain configurations are considered, that the {110} is the most stable and habit plane determinations confirm this.

The formation of these domain boundaries is a growth process rather than a dislocation process as suggested by the authors.[1] Actually to form coherent domain boundaries ({110} twins) the matrix material, vanadium, is only slightly distorted while the interstitial atoms require the greatest shifts. We believe this to be more compatible with a growth phenomenon.

It is interesting to note the similarities between the Ta-C and V-O systems. Beshers[6] has suggested on the basis of geometric and energetic arguments that in the group V-A metals the interstitials should occupy tetrahedral sites except for oxygen in vanadium and carbon in tantalum. Since the space group for the Ta-C and V-O superlattices are identical viz. $I4/mmm$, and on the basis of our structure factor work and c/a ratio determinations and the striking similarity between Ta-C and V-O, we conclude that the interstitials must occupy octahedral sites in the structure. A recent detailed analysis of the Nb-O ordering reaction[7] suggests that the ordered structure is Nb_2O in which oxygen atoms are most likely located in tetrahedral sites†. This limited evidence supports Beshers' conclusions.

This work was supported by the United States Atomic Energy Commission.

---

† We wish to thank the authors (ref. 7) for sending us a copy of their work prior to publication.

REFERENCES

1. J. W. Edington and R. E. Smallman, Acta Met., 13, 155 (1965).
2. R. E. Villagrana and G. Thomas, Appl. Phys. (letters) 6, 61 (1965).
3. ~~R. E. Villagrana and G. Thomas, Phys. Stat. Sol. 9, 499 (1965).~~
4. R. Gevers, P. Delavignette, H. Blank, and S. Amelinckx, Phys. Stat. Sol. 4, 383 (1964).
5. R. Gevers, P. Delavignette, H. Blank, J. van Landuyt, and S. Amelinckx Phys. Stat. Sol. 5, 595 (1964)
6. D. N. Beshers, J. Appl. Phys., 36, 290 (1965).
7. J. van Landuyt, R. Gevers and S. Amelinckx, "Ordering of Interstitials in Niobium" (to be published).

FIG. CAP.

Fig I - Proposed structure of the $V_{64}X$ superlattice (X is an interstitial atom). The subscripts s refer to the superlattice cell when $a_s = 4a_o \neq c_s$. a_o is the unit cell length of vanadium (BCC). The circles represent interstitial atoms in $\langle 0, \frac{1}{2}, 0 \rangle$ defining the BCT cell.

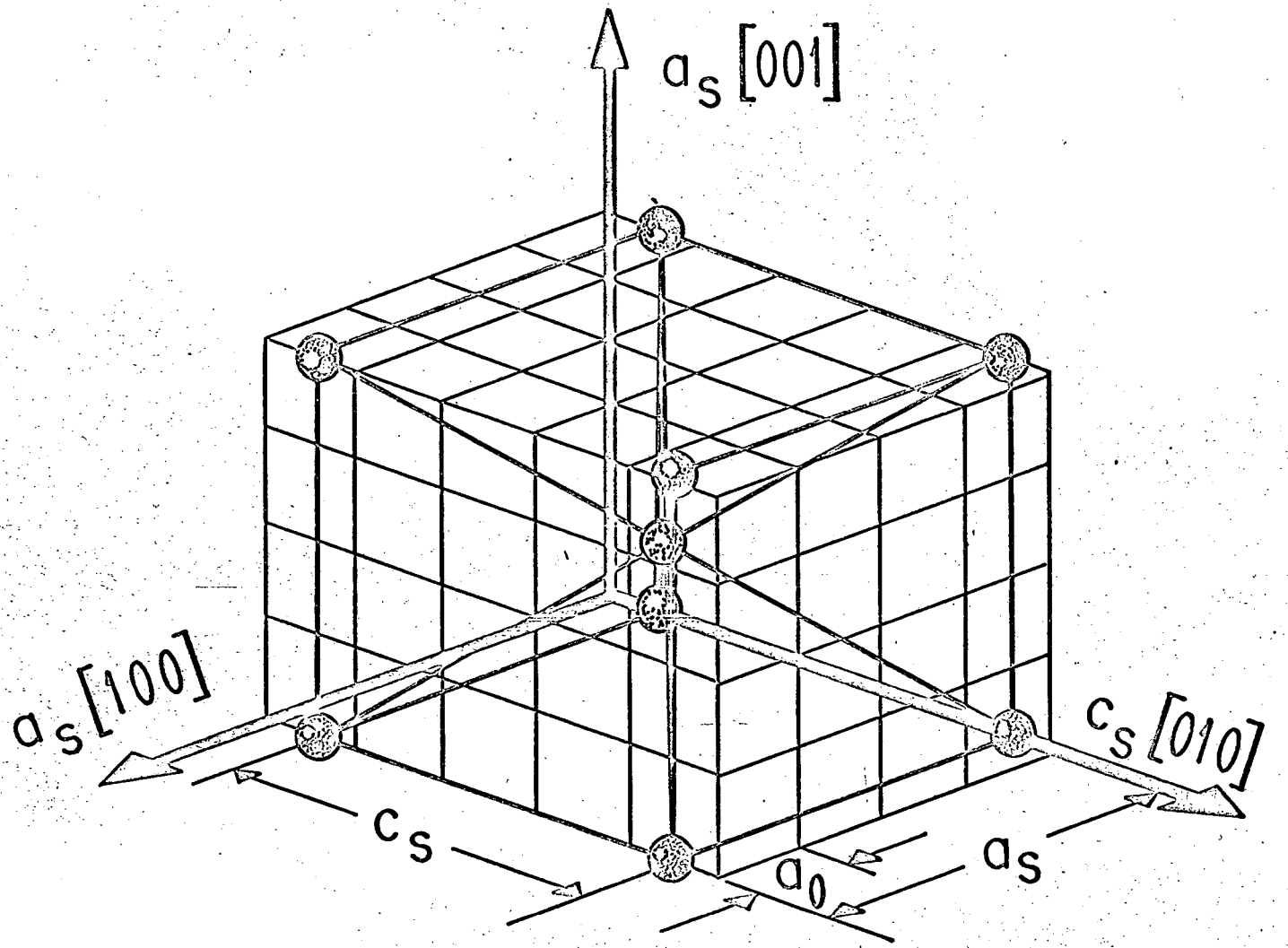

Fig. 1

MU-35009

This report was prepared as an account of Government sponsored work. Neither the United States, nor the Commission, nor any person acting on behalf of the Commission:

A. Makes any warranty or representation, expressed or implied, with respect to the accuracy, completeness, or usefulness of the information contained in this report, or that the use of any information, apparatus, method, or process disclosed in this report may not infringe privately owned rights; or

B. Assumes any liabilities with respect to the use of, or for damages resulting from the use of any information, apparatus, method, or process disclosed in this report.

As used in the above, "person acting on behalf of the Commission" includes any employee or contractor of the Commission, or employee of such contractor, to the extent that such employee or contractor of the Commission, or employee of such contractor prepares, disseminates, or provides access to, any information pursuant to his employment or contract with the Commission, or his employment with such contractor.